CLIFFVIEW PARK

ISSUED FOR BID

SEPTEMBER 22, 2023

SHEET INDEX

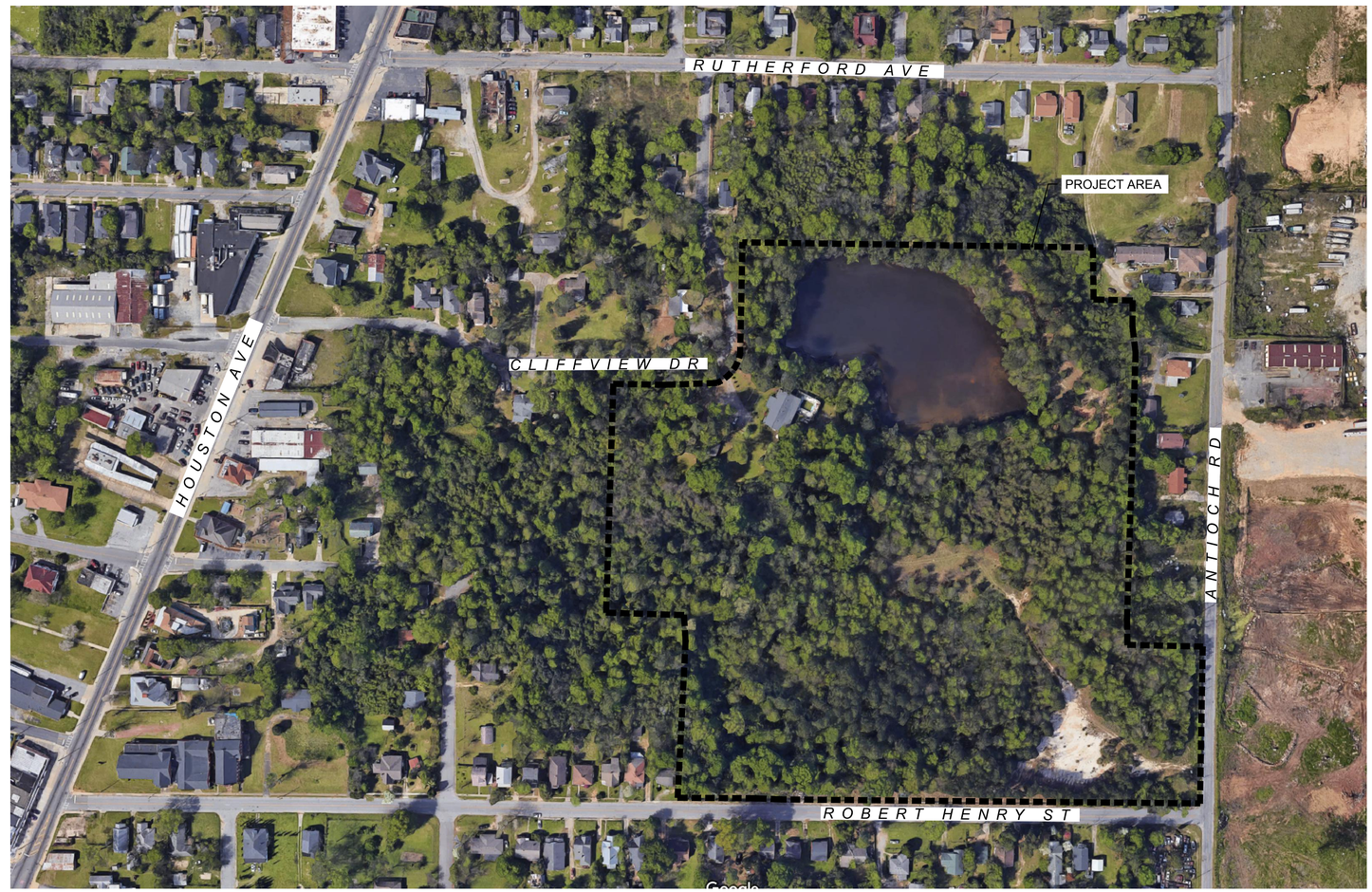

VICINITY MAP
Location: Macon, GA

OAK HAVEN STUDIO
986 COLE STREET
MACON, GA 31201
478.747.0250

FICKLING ARCHITECTURAL SERVICES LLC
155 OAK HAVEN AVE
MACON, GA 31204
478.737.8893

GENERAL NOTES

1. CONTRACTOR SHALL FIELD VERIFY ALL ITEMS REQUIRING REMOVAL AND PROTECTION WITH OWNER'S REPRESENTATIVE PRIOR TO CONSTRUCTION.
2. CONTRACTOR SHALL VERIFY LOCATIONS OF EXISTING TREES AND SHRUBS TO BE REMOVED OR RELOCATED WITH OWNER'S REPRESENTATIVE PRIOR TO START OF CONSTRUCTION. CONTRACTOR SHALL MARK/FLAG INDIVIDUAL TREES TO BE REMOVED AND TO REMAIN FOR THE APPROVAL OF OWNER'S REPRESENTATIVE.
3. PRIOR TO COMMENCING DEMOLITION OPERATIONS, CONTRACTOR SHALL CONTACT ALL UTILITY LOCATOR SERVICES AND CONFIRM ALL SERVICE LINES AND UTILITY LOCATIONS WITHIN THE LIMITS OF WORK.
4. CONTRACTOR SHALL THOROUGHLY REMOVE AND DISPOSE OF ALL PLANT MATERIALS, INCLUDING ROOTS, WITHIN AREAS SHOWN FOR DEMOLITION.
5. THE CONTRACTOR SHALL BE AWARE THAT UNDERGROUND IMPROVEMENTS MAY EXIST THAT ARE NOT SHOWN IN THE CONSTRUCTION PLANS INCLUDING, BUT NOT LIMITED TO, FOUNDATIONS, DEBRIS, ELECTRIC AND COMMUNICATION CONDUITS, PIPES, AND STORM DRAIN AND SEWER CONNECTIONS. THE CONTRACTOR SHALL IMMEDIATELY NOTIFY THE OWNER'S REPRESENTATIVE IF THESE UNKNOWN IMPROVEMENTS ARE LOCATED, EXPOSED, OR DAMAGED.
6. CONTRACTOR SHALL NOT PROCEED WITH CONSTRUCTION WHEN IT IS APPARENT THAT PREVIOUSLY UNKNOWN OBSTRUCTIONS AND/OR GRADE DIFFERENCES EXIST THAT MAY NOT HAVE BEEN KNOWN DURING DESIGN. SUCH CONDITIONS SHALL BE IMMEDIATELY BROUGHT TO THE ATTENTION OF THE OWNER'S REPRESENTATIVE FOR DIRECTION. THE CONTRACTOR SHALL ASSUME RESPONSIBILITY FOR ALL NECESSARY REVISIONS AND REPAIR COSTS THAT ARE THE RESULT OF FAILURE TO GIVE SUCH NOTIFICATION.
7. CONTRACTOR SHALL BE RESPONSIBLE FOR MAKING THEMSELVES FAMILIAR WITH ALL UNDERGROUND UTILITIES, PIPES AND STRUCTURES. CONTRACTOR SHALL TAKE RESPONSIBILITY FOR ANY COST INCURRED DUE TO DAMAGE TO UTILITIES.
8. CONTRACTOR IS RESPONSIBLE FOR SECURING AND PROPERLY DISPLAYING ALL GOVERNING PERMITS, ALL REQUIRED CITY/COUNTY PERMITS, AND STATE PERMITS.
9. CONTRACTOR TO INSTALL ALL HARDSCAPE IN ACCORDANCE WITH THE STATE OF GEORGIA AND THE AMERICAN DISABILITY ACTS STANDARDS.
10. CONTRACTOR SHALL BE RESPONSIBLE FOR COORDINATION OF THE SUBCONTRACTORS ACCOMPLISHMENT OF SCOPE OF WORK. CONTRACTOR SHALL COORDINATE CONSTRUCTION WITH OTHER TRADES WORKING ON THE SITE SIMULTANEOUSLY.
11. CONTRACTOR SHALL PROVIDE MOCKUPS AND SHOP DRAWINGS FOR APPROVAL PER SPECIFICATIONS PRIOR TO CONSTRUCTION. ALL IMPROVEMENTS SHALL BE CONSTRUCTED TO MEET THE APPROVED MOCKUP OR SHOP DRAWING.

DEMOLITION & PROTECTION NOTES

1. THE SURVEY CONDUCTED FOR THE PROJECT COVERS ONLY A PORTION OF THE SITE. SURVEY CONDUCTED BY WELLSTON ASSOCIATES LAND SURVEYORS 4/6/2023.
2. THE EXISTING CONDITION PLAN WAS CREATED THROUGH GIS DATA AND FIELD OBSERVATION. CONTRACTOR SHALL VERIFY ALL DIMENSIONS, OBJECTS, AND UTILITIES IN FIELD.
3. CONTRACTOR TO POTHOLE ALL EXISTING UTILITIES THAT ARE WITHIN 5' OF ALL PLANNED FOR UTILITIES AND TO POTHOLE ALL UTILITIES THAT REQUIRE UTILITY CROSSING OR COORDINATION.
4. CONTRACTOR SHALL FIELD VERIFY ALL DEMOLITION WITH OWNER'S REPRESENTATIVE PRIOR TO CONSTRUCTION.
5. THE CONTRACTOR IS PUT ON NOTICE THAT CONDITIONS MAY EXIST UNDERGROUND THAT ARE NOT SHOWN IN THE CONSTRUCTION PLANS INCLUDING, BUT NOT LIMITED TO, LIGHTING, SANITARY SEWER, STORM SEWER, GAS LINES, & IRRIGATION CONDUITS. THE CONTRACTOR SHALL IMMEDIATELY NOTIFY THE OWNER'S REPRESENTATIVE IF UNANTICIPATED CONDITIONS ARE ENCOUNTERED DURING CONSTRUCTION.
6. CONTRACTOR SHALL THOROUGHLY CLEAR, GRUB, AND DISPOSE OF EXISTING PLANT MATERIAL AREAS SHOWN FOR DEMOLITION.
7. CONTRACTOR SHALL COORDINATE SITE DEMOLITION OPERATIONS WITH ALL OTHER TRADES PERFORMING WORK ON THE PROJECT.
8. CONTRACTOR SHALL REPLACE OR REPAIR TO ORIGINAL CONDITION ALL BUILDINGS, UTILITIES, AND SITE IMPROVEMENTS THAT ARE NOT DESIGNATED FOR REMOVAL, AND THAT ARE DAMAGED AS A RESULT OF CONSTRUCTION OPERATIONS, AT NO ADDITIONAL COST TO OWNER.
9. CONTRACTOR SHALL CAREFULLY REMOVE, SALVAGE, STOCKPILE, REUSE, AND RESET EXISTING SIGNAGE, PAVERS, SCULPTURES, MANHOLE COVERS, VALVE COVERS AND BOXES, TELEPHONE, ELECTRICAL, CABLE PEDESTALS, AND OTHER MISCELLANEOUS ITEMS AS REQUIRED AND DIRECTED BY OWNER'S REPRESENTATIVE, UNLESS OTHERWISE NOTED. STOCKPILE MATERIALS AT APPROVED LOCATION. CONTRACTOR SHALL LOCATE AND INSTALL THESE ITEMS AS THEY WERE ORIGINALLY INSTALLED EXCEPT AS OTHERWISE DIRECTED BY THE OWNER'S REPRESENTATIVE.
10. CONTRACTOR SHALL PROTECT AND MAINTAIN EXISTING ELECTRICAL SYSTEMS, CONDUIT, CONNECTIONS AND IMMEDIATELY RESTORE THEM WHEN DISRUPTED BY CONSTRUCTION, AT NO ADDITIONAL COST TO OWNER.
11. COORDINATE ADDITIONAL DEMOLITION REQUIREMENTS AS NECESSARY FOR CONSTRUCTION ACCESS AND STAGING.
12. DEMOLITION WORK ADJACENT TO EXISTING PAVEMENT SHALL BE SAWCUT TO MAINTAIN AN INTACT EDGE. DAMAGE TO THE EXISTING EDGE OF PAVEMENT WILL REQUIRE ADDITIONAL SAWCUTTING, REMOVAL AND REPLACEMENT. CONCRETE SHALL BE REMOVED AT EXISTING JOINT LOCATIONS.
13. ADJUST ALL EXISTING UTILITY MANHOLE COVERS, VALVE BOXES, FIRE HYDRANTS AND UTILITY BOXES TO FINAL GRADE.
14. CONTRACTOR SHALL PROVIDE FOR EROSION CONTROL DURING DEMOLITION.
15. THOROUGHLY CLEAN ALL AREAS AND SURFACES IMPACTED BY DEMOLITION PRIOR TO START OF NEW CONSTRUCTION.
16. LANDSCAPE ARCHITECT ASSUMES NO RESPONSIBILITY FOR BURIED UTILITIES. CONTRACTOR IS RESPONSIBLE FOR LOCATING AND PROTECTING ALL UTILITIES PRIOR TO AND DURING CONSTRUCTION.

LANDSCAPE NOTES

1. ALL SITE IMPROVEMENTS MUST BE FIELD SURVEYED AND STAKED BY CONTRACTOR. OWNER'S REPRESENTATIVE SHALL APPROVE STAKED LOCATION OF IMPROVEMENTS PRIOR TO INSTALLATION.
2. OWNER'S REPRESENTATIVE OR LANDSCAPE ARCHITECT SHALL APPROVE FINAL STAKING BY CONTRACTOR OF ALL CONCRETE FLATWORK PRIOR TO CONSTRUCTION AND ALL FORM WORK PRIOR TO POURING.
3. ALL DIMENSIONS SHALL BE FIELD VERIFIED BY CONTRACTOR PRIOR TO CONSTRUCTION. ANY DEVIATION FROM THESE PLANS MUST BE APPROVED BY OWNER'S REPRESENTATIVE OR LANDSCAPE ARCHITECT PRIOR TO CONSTRUCTION.
4. PRIOR TO EXCAVATION, UNDERGROUND UTILITIES MUST BE FIELD VERIFIED (SEE GENERAL NOTES).
5. INSTALL DOWELED JOINT CONNNECTION AND $\frac{1}{2}$" EXPANSION JOINT MATERIAL AND CAULK JOINTS AT ALL VERTICAL INTERSECTIONS BETWEEN NEW AND EXISTING CONCRETE, REFER TO DETAIL.
6. SAW CUT CONTROL JOINTS SHALL BE SPACED AS INDICATED ON THE PLANS AND DETAILS. EXPANSION JOINTS SHALL BE PLACED EVERY 100LF ALONG CONCRETE PATHS. CONTRACTOR SHALL LAYOUT ALL CONTROL JOINTS AND EXPANSION JOINTS IN THE FIELD WITH THE OWNER'S REPRESENTATIVE.
7. DO NOT SCALE THE PLANS. DIMENSIONS SUPERSEDE DRAWING SCALES. VERIFY LAYOUT PRIOR TO EXCAVATION.
8. DIMENSIONS ARE DRAWN TO FACE OF CURB, WALL, AND EDGE UNLESS OTHERWISE SPECIFIED.
9. IF THERE IS A DISCREPANCY BETWEEN THE PLANS AND SPECIFICATIONS, THE SPECIFICATIONS WILL SUPERSEDE PLANS.

PLANTING NOTES

1. THE CONTRACTOR SHALL SUPPLY ALL PLANTS IN QUANTITIES SUFFICIENT TO COMPLETE THE WORK SHOWN ON THE PLAN. SHOULD ANY DISCREPANCIES EXIST BETWEEN QUANTITIES SHOWN IN THE PLANT LIST AND THOSE SHOWN IN THE DRAWINGS, THE DRAWINGS SHALL TAKE PRECEDENCE.
2. ALL PLANT MATERIAL SHALL BE REVIEWED BY THE OWNER'S REPRESENTATIVE PRIOR TO INSTALLATION. CONTRACTOR SHALL INSURE PLANT MATERIAL MEET THE SPECIFICATIONS OF THE AMERICAN STANDARDS FOR NURSERY STOCK (LATEST EDITION) AS SET FORTH BY THE AMERICAN ASSOCIATION OF NURSERYMEN.
3. CONTRACTOR SHALL FURNISH PLANT MATERIALS FREE OF PESTS OR PLANT DISEASES. PRE-SELECTED OR "TAGGED" MATERIAL MUST BE INSPECTED BY THE CONTRACTOR AND CERTIFIED PEST AND DISEASE FREE. IT IS THE CONTRACTOR'S OBLIGATION TO WARRANTY ALL PLANT MATERIALS PER THE SPECIFICATIONS.
4. CONTRACTOR SHALL REVIEW TREE LAYOUT WITH OWNER'S REPRESENTATIVE TO DETERMINE CONFLICTS OR INTERFERENCE PRIOR TO STAKING. CONTRACTOR SHALL STAKE PLANT LOCATIONS FOR THE REVIEW BY THE OWNER'S REPRESENTATIVE OR LANDSCAPE ARCHITECT, PRIOR TO DIGGING PLANTING PITS. THE CONTRACTOR SHALL RELOCATE ANY PLANT AS DIRECTED BY THE OWNER'S REPRESENTATIVE OR LANDSCAPE ARCHITECT PRIOR TO PLANTING AT NO ADDITIONAL COST TO THE OWNER.
5. ALL LANDSCAPE AREAS SHALL BE COVERED WITH A MINIMUM OF 4 INCH DEPTH MULCH, UNLESS EROSION CONTROL FABRIC IS INSTALLED. SUBMIT MULCH SAMPLE TO LANDSCAPE ARCHITECT PRIOR TO INSTALLATION.
6. ANY LANDSCAPE AREAS BEYOND LIMITS OF WORK DISTURBED BY CONSTRUCTION OPERATIONS, NOT DIRECTED BY OWNER'S REPRESENTATIVE, SHALL BE REPAIRED OR REPLACED AT THE CONTRACTOR'S EXPENSE.
7. CONTAMINATION OF PLANTING MIX/TOPSOIL TO REMAIN DURING CONSTRUCTION WILL REQUIRE COMPLETE REPLACEMENT AT CONTRACTOR'S EXPENSE.

LIST OF ABBREVIATIONS

APPROX	APPROXIMATE	DIM	DIMENSION	GA	GUAGE	MAX	MAXIMUM	R	RADIUS	SS	STAINLESS STEEL	VERT	VERTICAL
ARCH	ARCHITECT	DWG	DRAWINGS	GAL	GALLON	ME	MEET EX. GRADE	RCP	REINFORCED CONCRETE PIPE	ST	STORM SEWER	VIF	VERIFY IN FIELD
@	AT	E	EAST	GALV	GALVANIZED	MH	MANHOLE	RE/REF	REFERENCE	STA	STATION	W	WEST
ALT	ALTERNATE	EA	EACH	GB	GRADE BREAK	MIN	MINIMUM	REINF	REINFORCED	STD	STANDARD	W/	WITH
B&B	BALLED AND BURLAPPED	EJ	EXPANSION JOINT	GC	GENERAL CONTRACTOR	MISC	MISCELLANEOUS	REQ'D	REQUIRED	STRUCT	STRUCTURAL	W/O	WITHOUT
BC	BOTTOM OF CURB	EL	ELEVATION	GEN	GENERAL	N	NORTH	REV	REVISION, REVISED	SY	SQUARE YARD	WWF	WELDED WIRE FABRIC
BM	BENCH MARK	ELEC	ELECTRICAL	HDPE	HIGH DENSITY POLYETHYLENE	N/A	NOT APPLICABLE	RIM	RIM ELEVATION	SYM	SYMMETRICAL	WWM	WELDED WIRE MESH
BC	BACK OF CURB	ENG	ENGINEER	HORIZ	HORIZONTAL	NIC	NOT IN CONTRACT	ROW	RIGHT-OF-WAY	TBD	TO BE DETERMINED	YD	YARD
BR	BOTTOM OF RAMP	EQ	EQUAL	HP	HIGH POINT	NO	NUMBER	S	SOUTH	TC	TOP OF CURB		
BW	BOTTOM OF WALL	EW	EACH WAY	HT/H	HEIGHT	NOM	NOMINAL	SAN	SANITARY	TF	TOP OF FOOTING		
CAL	CALIPER	EX	EXISTING	ID	INSIDE DIAMETER	NTS	NOT TO SCALE	SCH	SCHEDULE	THK	THICK		
CJ	CONTROL JOINT	EX FL	EXISTING FLOWLINE	IN	INCHES	OC	ON CENTER	SD	STORM DRAIN	TM	TOP OF MONUMENT		
CL	CENTERLINE	EXP	EXPANSION	INV	INVERT ELEVATION	OD	OUTSIDE DIAMETER	SEC	SECTION	TOPO	TOPOGRAPHY		
CONC	CONCRETE	FFE	FINISH FLOOR ELEVATION	IRR	IRRIGATION	PA	PLANTING AREA	SF	SQUARE FOOT (FEET)	TR	TOP OF RAMP		
CONT	CONTINUOUS	FG	FINISHED GRADE	JT	JOINT	PED	PEDESTRIAN	SHT	SHEET	TS	TOP OF STEP		
CU	CUBIC	FIN	FINISH	LIN	LINEAR	PERF	PERFORATED	SI	STORM INLET	TSL	TOP OF SLAB		
CY	CUBIC YARD	FL	FLOWLINE	LF	LINEAR FEET	PL	PROPERTY LINE	SIM	SIMILAR	TW	TOP OF WALL		
DEMO	DEMOLISH, DEMOLITION	FOC	FACE OF CURB	LP	LOW POINT	PVC	POLY VINYL CHLORIDE	SPECS	SPECIFICATION	TYP	TYPICAL		
DIA	DIAMETER	FT	FOOT (FEET)	LT	LIGHT	QTY	QUANTITY	SQ	SQUARE	VAR	VARIES		

OAK HAVEN STUDIO
986 COLE STREET
MACON, GA 31201
478.747.0250

CLIFFVIEW PARK
MACON, GA 31206

GEORGIA REGISTERED No. LA001917 LANDSCAPE ARCHITECT LAURIE FICKLING

KEY PLAN:

REVISIONS:

#	DATE	DESCRIPTION

DATE: SEPTEMBER 22, 2023

NOTES AND ABBREVIATIONS

SHEET:

L0.0

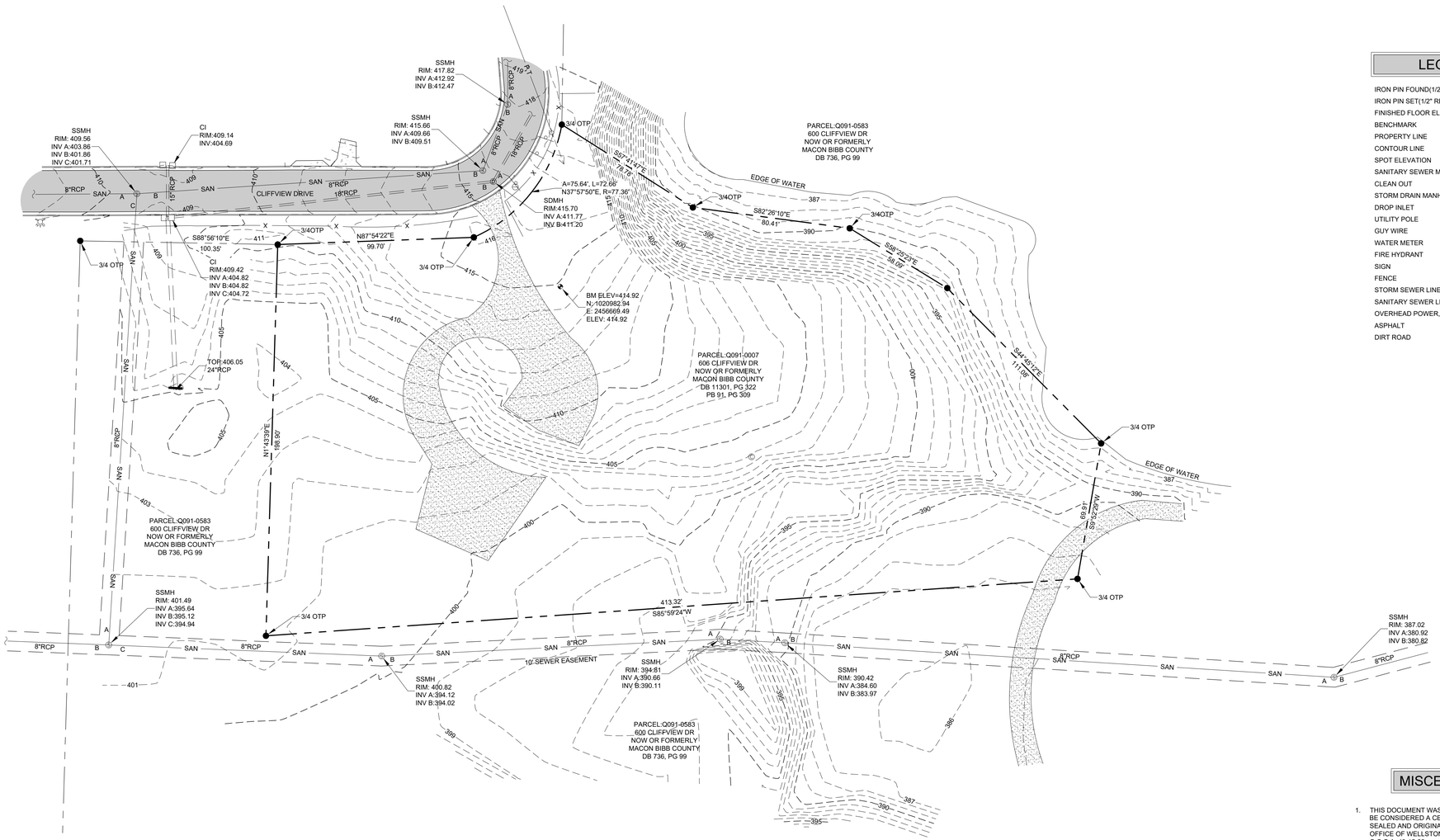

LEGEND OF SYMBOLS

IRON PIN FOUND(1/2" REBAR UNLESS NOTED)	●
IRON PIN SET(1/2" REBAR W/CAP)	○
FINISHED FLOOR ELEVATION	F.F.E.
BENCHMARK	
PROPERTY LINE	
CONTOUR LINE	950
SPOT ELEVATION	×950.10
SANITARY SEWER MANHOLE	Ⓢ
CLEAN OUT	Ⓒ
STORM DRAIN MANHOLE	Ⓓ
DROP INLET	□
UTILITY POLE	
GUY WIRE	<
WATER METER	
FIRE HYDRANT	
SIGN	
FENCE	X
STORM SEWER LINE	
SANITARY SEWER LINE	SAN
OVERHEAD POWER, TELEPHONE AND CATV	P,T,TV
ASPHALT	
DIRT ROAD	

MISCELLANEOUS NOTES

1. THIS DOCUMENT WAS CREATED ELECTRONICALLY. THIS MEDIA SHOULD NOT BE CONSIDERED A CERTIFIED DOCUMENT UNLESS IT HAS BEEN PROPERLY SEALED AND ORIGINALLY SIGNED BY A REGISTERED LAND SURVEYOR AT THE OFFICE OF WELLSTON ASSOCIATES LAND SURVEYORS, LLC AUTHORITY O.C.G.A. 43-15-22.
2. THE UNDERGROUND UTILITIES SHOWN ON THIS DRAWING WERE COMPILED FROM FIELD OBSERVATIONS WITHOUT BENEFIT OF EXCAVATION. WELLSTON ASSOCIATES LAND SURVEYORS, LLC DOES NOT GUARANTEE THAT ALL UTILITIES ARE SHOWN. VERIFICATION OF UTILITIES SHOULD BE MADE BY THE INDIVIDUAL UTILITY COMPANY PRIOR TO ANY CONSTRUCTION.
3. WELLSTON ASSOCIATES LAND SURVEYORS, LLC DOES NOT GUARANTEE THAT ALL EASEMENTS WHICH MAY AFFECT THE SUBJECT TRACT ARE SHOWN.
4. BY GRAPHICAL PLOTTING ONLY, THE SUBJECT AREA LIES WITHIN ZONE "X" OF THE NATIONAL FLOOD INSURANCE PROGRAM, FLOOD INSURANCE RATE MAP NO. 13021C0142G, DATED 06/07/2017.
5. ONE FOOT CONTOUR INTERVAL SHOWN. ELEVATIONS SHOWN ARE REFERENCED TO NAVD 88 DATUM.
6. PROPERTY LINES SHOWN HEREON WERE TAKEN FROM MATTERS OF RECORD AND EVIDENCE FOUND IN THE FIELD. THE SURVEYOR'S CERTIFICATION EXTENDS ONLY TO THE TOPOGRAPHIC ASPECTS AND THE TOPOGRAPHIC SURVEY DOES NOT CONSTITUTE A BOUNDARY SURVEY. THIS SURVEY IS NOT TO BE RECORDED AND SHOULD NOT BE USED TO CONVEY PROPERTY.

30 0 30 60 90
GRAPHIC SCALE IN FEET

Revisions

No.	Date	Description

WELLSTON ASSOCIATES
LAND SURVEYORS, LLC
506 OSIGIAN BOULEVARD, SUITE 2
WARNER ROBINS, GEORGIA 31088
OFFICE (478) 971-3382
WWW.WELLSTONASSOC.COM

TOPOGRAPHIC SURVEY
PROPERTY OF
MACON BIBB COUNTY
606 CLIFFVIEW DR
MACON RESERVE WEST
GEORGIA
LAND LOT 73
MACON-BIBB COUNTY

Project No.:	1355-002
Drawing No.:	TPS
Drawn By:	MH
Checked By:	SHJ
R.L.S. No.:	3171

GEORGIA REGISTERED No.3171 LAND SURVEYOR SPENCER H. JOHNSON

Date:	4/6/2023
Scale:	1"=30'
Sheet No.:	1 of 1

Plotted By:MEH
Plot Date: 4/6/2023
File Name: 1355-002TPS.dwg

PLAT BOOK 91, PAGE 309

THIS SHEET REFERENCES DRAWING NO. Q384

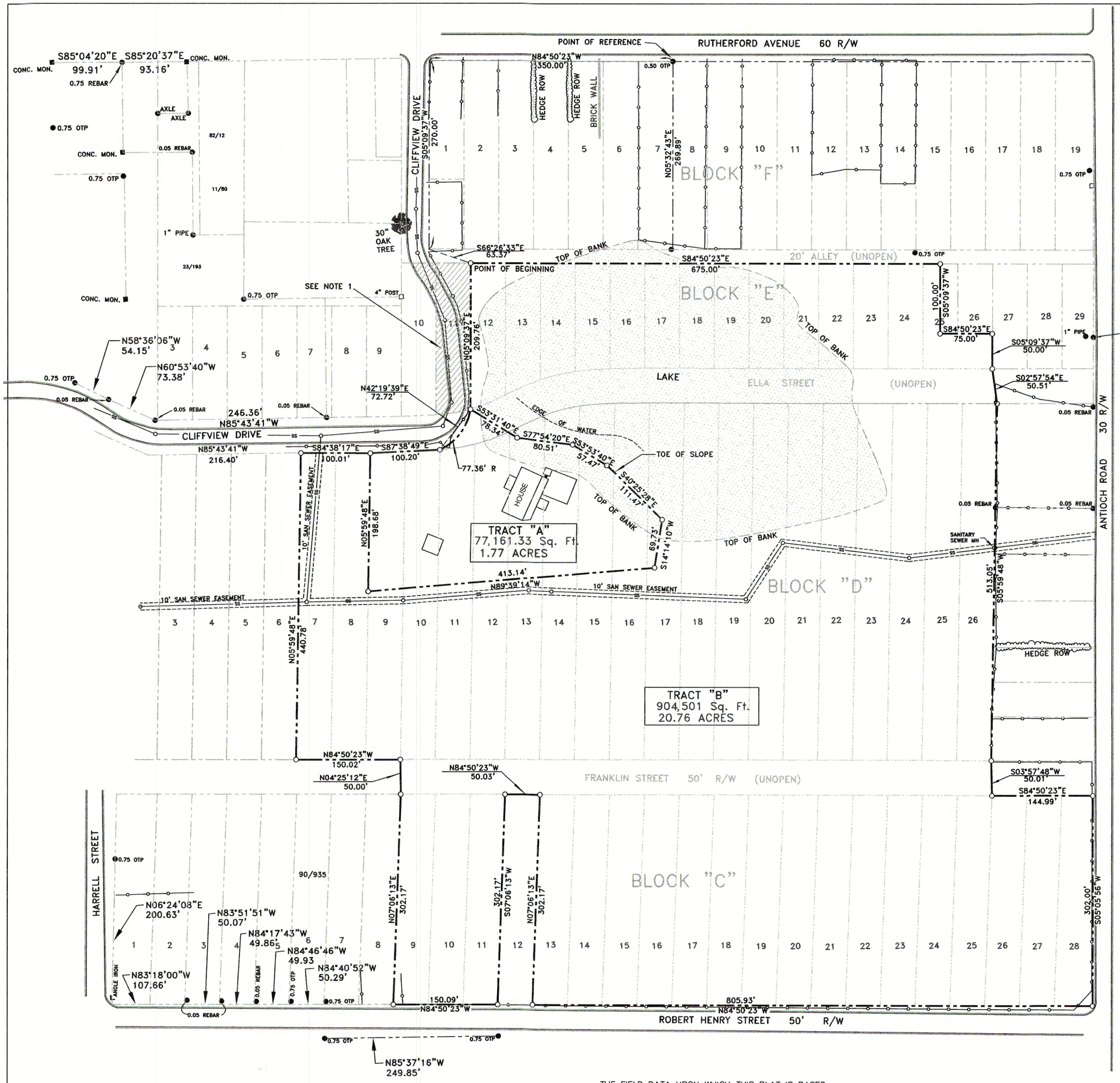

LEGEND

- ■ = CONCRETE MONUMENT FOUND
- ● = IRON PIN FOUND (TYPE NOTED)
- ○ = IRON PIN SET (3/4" OTP)
- —o— = FENCE
- —SS— = SANITARY SEWER LINE

REFERENCES

PLATS	DEEDS
Plat Book 7, Page 82	Deed Book 644, Page 474
Plat Book 9, Page 64	Deed Book 772, Page 235
Plat Book 11, Page 80	Deed Book 1307, Page 987
Plat Book 23, Page 193	Deed Book 1407, Page 753
Plat Book 30, Page 70	Deed Book 1408, Page 895
Plat Book 61, Page 96	Deed Book 1666, Page 496
Plat Book 81, Page 17	Deed Book 1876, Page 265
Plat Book 82, Page 12	Deed Book 1968, Page 281
Plat Book 86, Page 14	Deed Book 2079, Page 169
Plat Book 89, Page 90	Deed Book 2304, Page 233
Plat Book 90, Page 18	Deed Book 2683, Page 144
Plat Book 90, Page 935	Deed Book 2984, Page 170
	Deed Book 5068, Page 83
	Deed Book 5189, Page 19

Clerk's Office, Bibb Superior Court

NOTE 1.

PORTIONS OF LOTS 10 AND 11 OF BLOCK "E" CLAIMED BY THE CITY OF MACON BY VIRTUE OF THE PAVING AND MAINTENANCE OF CLIFFVIEW DRIVE

GRAPHIC SCALE

100 0 50 100 200 400

(IN FEET)
1 inch = 100 ft.

THE FIELD DATA UPON WHICH THIS PLAT IS BASED HAS A CLOSURE PRECISION OF ONE FOOT IN 12,500 FEET AND AN ANGULAR ERROR OF .05" PER ANGLE POINT AND WAS ADJUSTED USING THE COMPASS RULE.

THIS PLAT HAS BEEN CALCULATED FOR CLOSURE AND IS FOUND TO BE ACCURATE WITHIN ONE FOOT ON 21,300.

THE EQUIPMENT USED FOR LINEAR AND ANGULAR MEASUREMENTS WAS A TOPCON GTS-303D.

PROPERTY SURVEY

CITY OF MACON

DWG NO.	DATE:	DWG BY:	SCALE:
Q384_Plat	25 June 04	TCC	1"= 100'

LOCATION: PART OF BLOCKS "C", "D",& "E"
LL 73 RUTHERFORD PROPERTY, MRW
MACON, BIBB COUNTY, GEORGIA

WILLIAM C. CAUSEY
L.S. # 2652
P.O. BOX 247
MACON, GA 31298
(912)751-7180

CITY OF MACON ENGINEERING DEPARTMENT

CITY OF MACON

SUITE 800 CITY HALL ANNEX

Legend

- Two Ft Contours
- Parcels
- 600 Cliffview Dr

N

01 ***AERIAL PHOTO AND GIS CONTOUR OVERLAY***
SCALE: NOT TO SCALE

OAK HAVEN STUDIO
986 COLE STREET
MACON, GA 31201
478.747.0250

CLIFFVIEW PARK

MACON, GA 31206

GEORGIA REGISTERED LANDSCAPE ARCHITECT No. LA001917 LAURIE FICKLING

KEY PLAN:

REVISIONS:

#	DATE	DESCRIPTION

DATE: SEPTEMBER 22, 2023

AERIAL PHOTO AND CONTOUR OVERLAY

SHEET:

L0.1

1

2

3

4

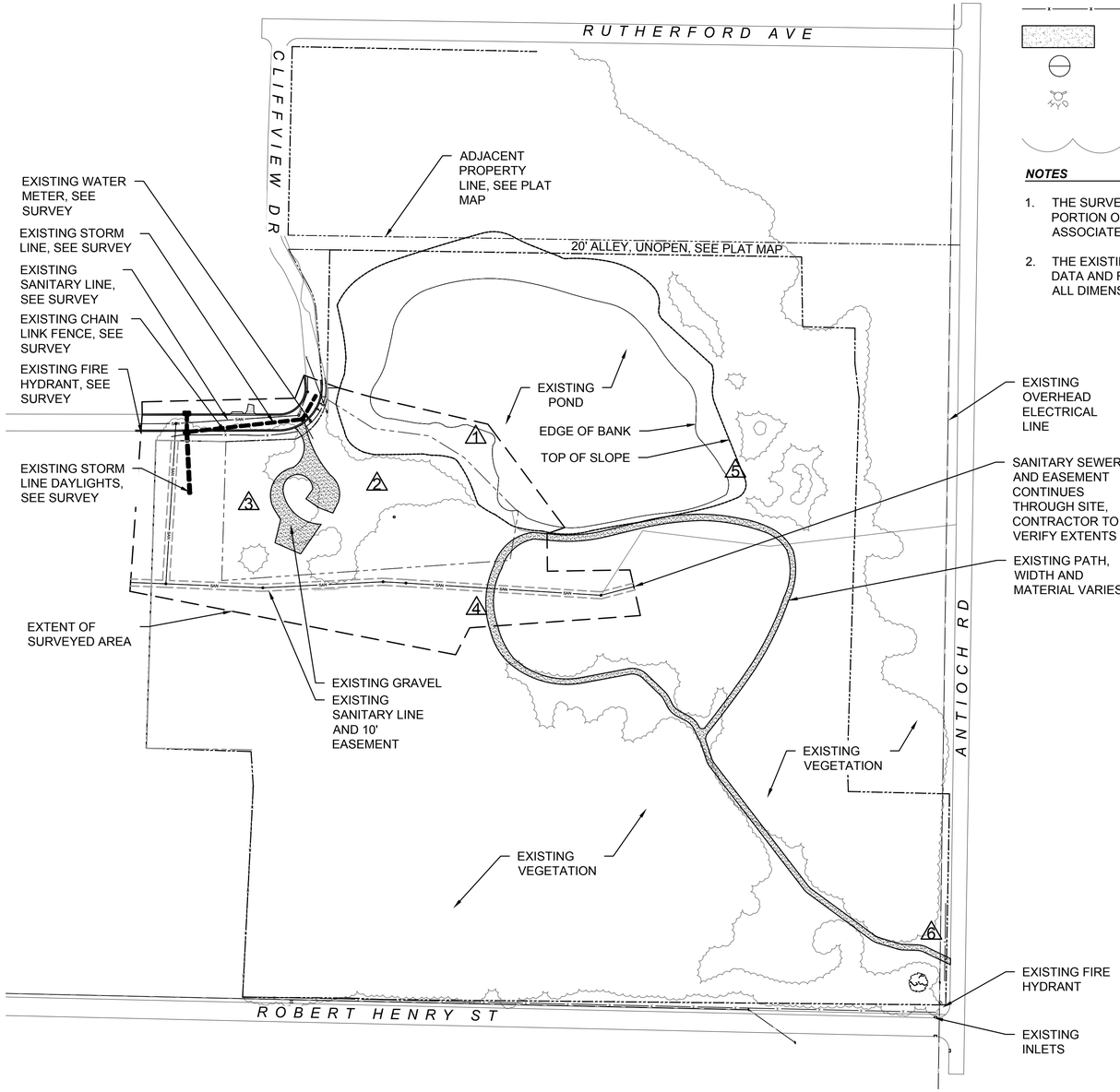

01 EXISTING CONDITIONS PLAN

SCALE: 1"=100'-0"

EXISTING CONDITIONS LEGEND

- PROPERTY LINE
- EXISTING SEWER LINE
- EXISTING STORM LINE
- EXISTING OVERHEAD ELEC LINE
- EXISTING CHAIN LINK FENCE
- EXISTING GRAVEL
- EXISTING WATER METER
- EXISTING FIRE HYDRANT
- EXISTING VEGETATION

NOTES

1. THE SURVEY CONDUCTED FOR THE PROJECT COVERS ONLY A PORTION OF THE SITE. SURVEY CONDUCTED BY WELLSTON ASSOCIATES LAND SURVEYORS 4/6/2023.
2. THE EXISTING CONDITION PLAN WAS CREATED THROUGH GIS DATA AND FIELD OBSERVATION. CONTRACTOR SHALL VERIFY ALL DIMENSIONS, OBJECTS, AND UTILITIES IN FIELD.

5

6

OAK HAVEN STUDIO
986 COLE STREET
MACON, GA 31201
478.747.0250

CLIFFVIEW PARK

MACON, GA 31206

GEORGIA REGISTERED No. LA001917 LANDSCAPE ARCHITECT LAURIE FICKLING

KEY PLAN:

REVISIONS:

#	DATE	DESCRIPTION

DATE: SEPTEMBER 22, 2023

EXISTING CONDITIONS PLAN

SHEET:

L0.2

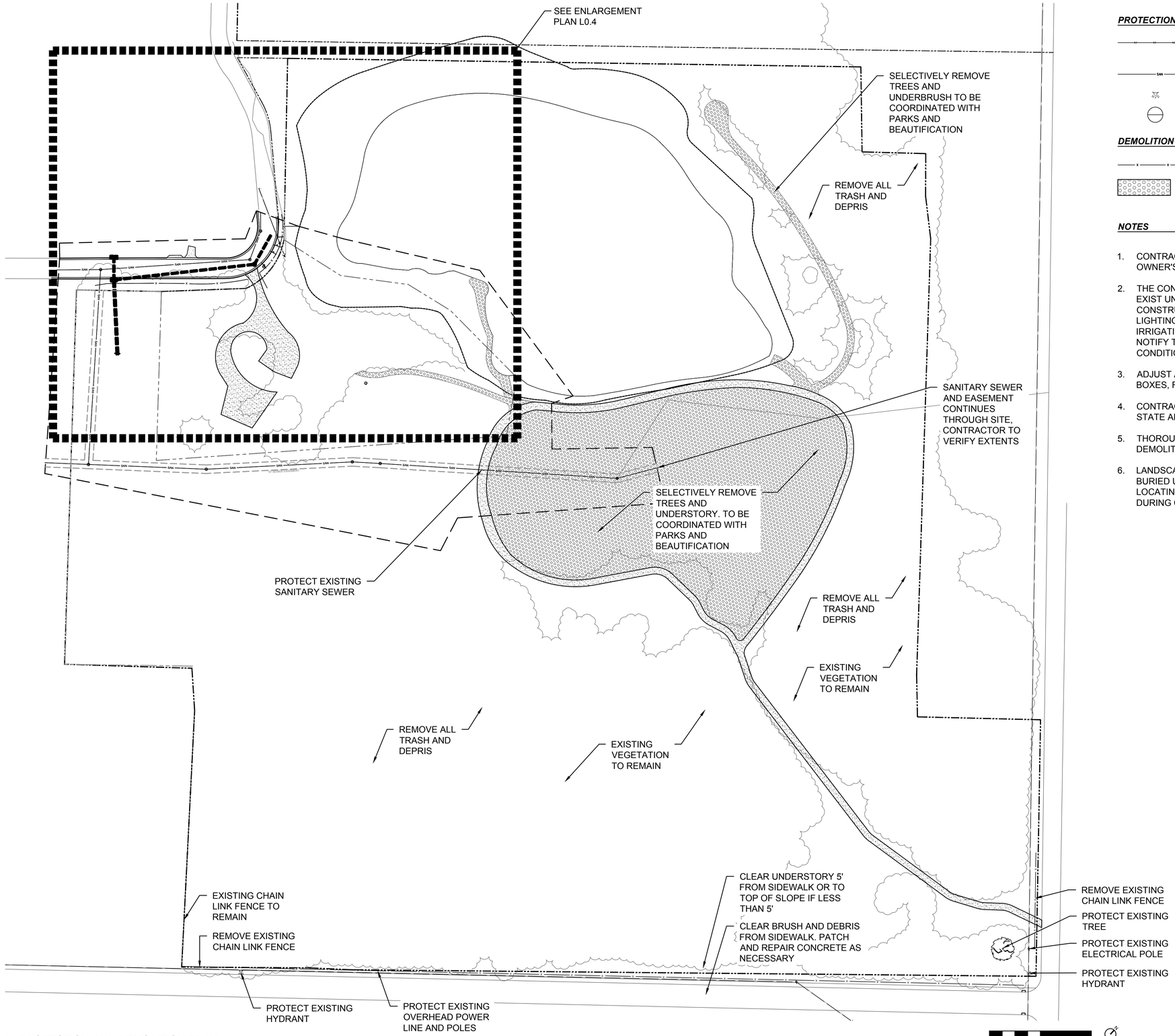

01 PROTECTION AND DEMOLITION PLAN

SCALE: 1"=60'-0"

PROTECTION LEGEND

- PROTECT EXISTING OVERHEAD POWER LINE AND POLES
- PROTECT EXISTING SEWER LINE
- PROTECT EXISTING HYDRANT
- PROTECT EXISTING WATER METER

DEMOLITION LEGEND

- REMOVE EXISTING CHAIN LINK FENCE
- CLEAR AND GRUB VEGETATION

NOTES

1. CONTRACTOR SHALL FIELD VERIFY ALL DEMOLITION WITH OWNER'S REPRESENTATIVE PRIOR TO CONSTRUCTION.
2. THE CONTRACTOR IS PUT ON NOTICE THAT CONDITIONS MAY EXIST UNDERGROUND THAT ARE NOT SHOWN IN THE CONSTRUCTION PLANS INCLUDING, BUT NOT LIMITED TO, LIGHTING, SANITARY SEWER, STORM SEWER, GAS LINES, & IRRIGATION CONDUITS. THE CONTRACTOR SHALL IMMEDIATELY NOTIFY THE OWNER'S REPRESENTATIVE IF UNANTICIPATED CONDITIONS ARE ENCOUNTERED DURING CONSTRUCTION.
3. ADJUST ALL EXISTING UTILITY MANHOLE COVERS, VALVE BOXES, FIRE HYDRANTS AND UTILITY BOXES TO FINAL GRADE.
4. CONTRACTOR SHALL PROVIDE FOR EROSION CONTROL PER STATE AND LOCAL CODES DURING DEMOLITION.
5. THOROUGHLY CLEAN ALL AREAS AND SURFACES IMPACTED BY DEMOLITION PRIOR TO START OF NEW CONSTRUCTION.
6. LANDSCAPE ARCHITECT ASSUMES NO RESPONSIBILITY FOR BURIED UTILITIES. CONTRACTOR IS RESPONSIBLE FOR LOCATING AND PROTECTING ALL UTILITIES PRIOR TO AND DURING CONSTRUCTION.

OAK HAVEN STUDIO
986 COLE STREET
MACON, GA 31201
478.747.0250

CLIFFVIEW PARK

MACON, GA 31206

GEORGIA REGISTERED No. LA001917 LANDSCAPE ARCHITECT LAURIE FICKLING

KEY PLAN:

REVISIONS:

#	DATE	DESCRIPTION

DATE: SEPTEMBER 22, 2023

PROTECTION & DEMOLITION PLAN

SHEET:

L0.3

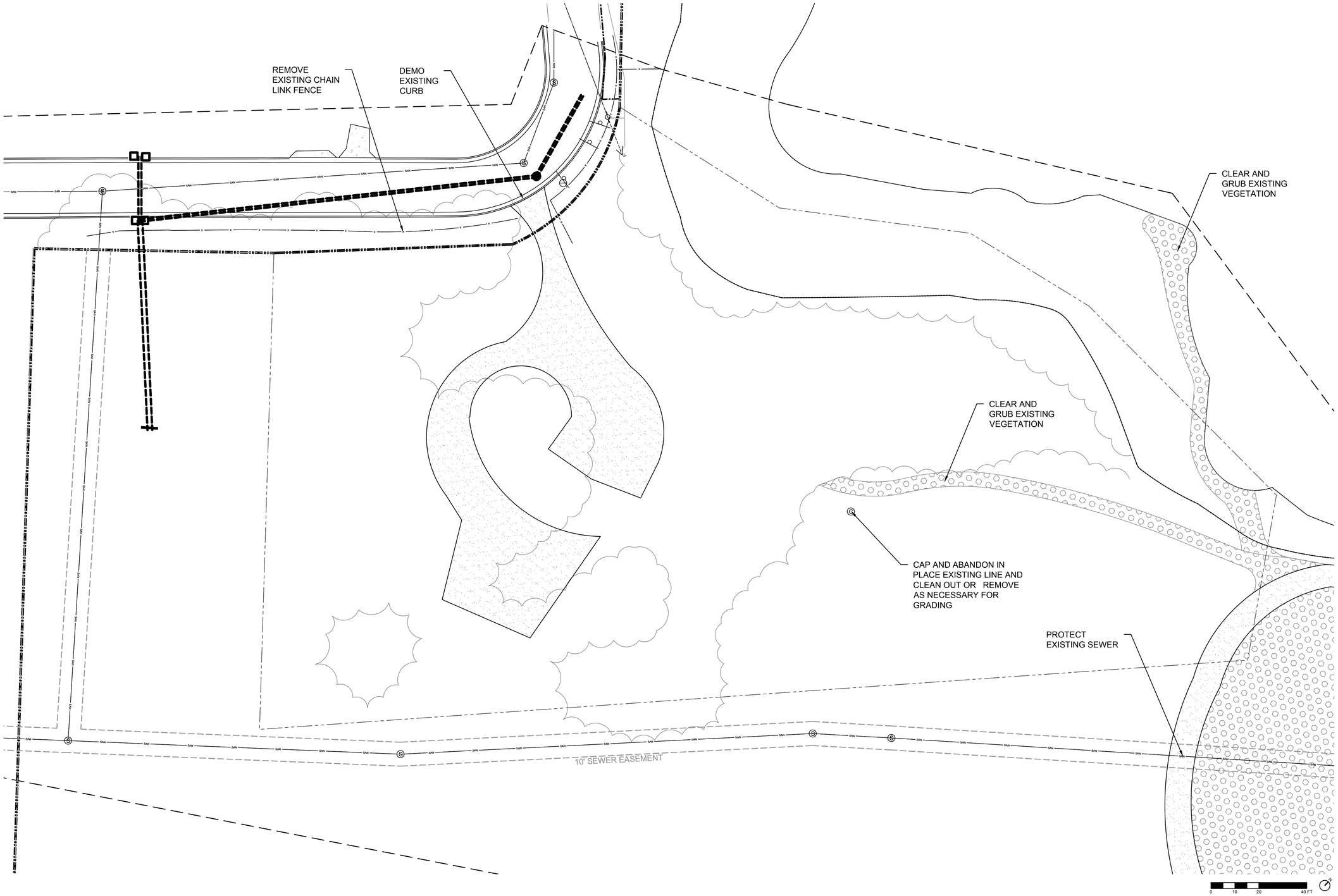

01 ***PROTECTION AND DEMOLITION PLAN ENLARGEMENT***
SCALE: 1"=20'-0"

OAK HAVEN
STUDIO
986 COLE STREET
MACON, GA 31201
478.747.0250

CLIFFVIEW PARK

MACON, GA 31206

GEORGIA REGISTERED LANDSCAPE ARCHITECT
No. LA001917
LAURIE FICKLING

KEY PLAN:

REVISIONS:

#	DATE	DESCRIPTION

DATE: SEPTEMBER 22, 2023

PROTECTION &
DEMOLITION PLAN
ENLARGEMENT

SHEET:

L0.4

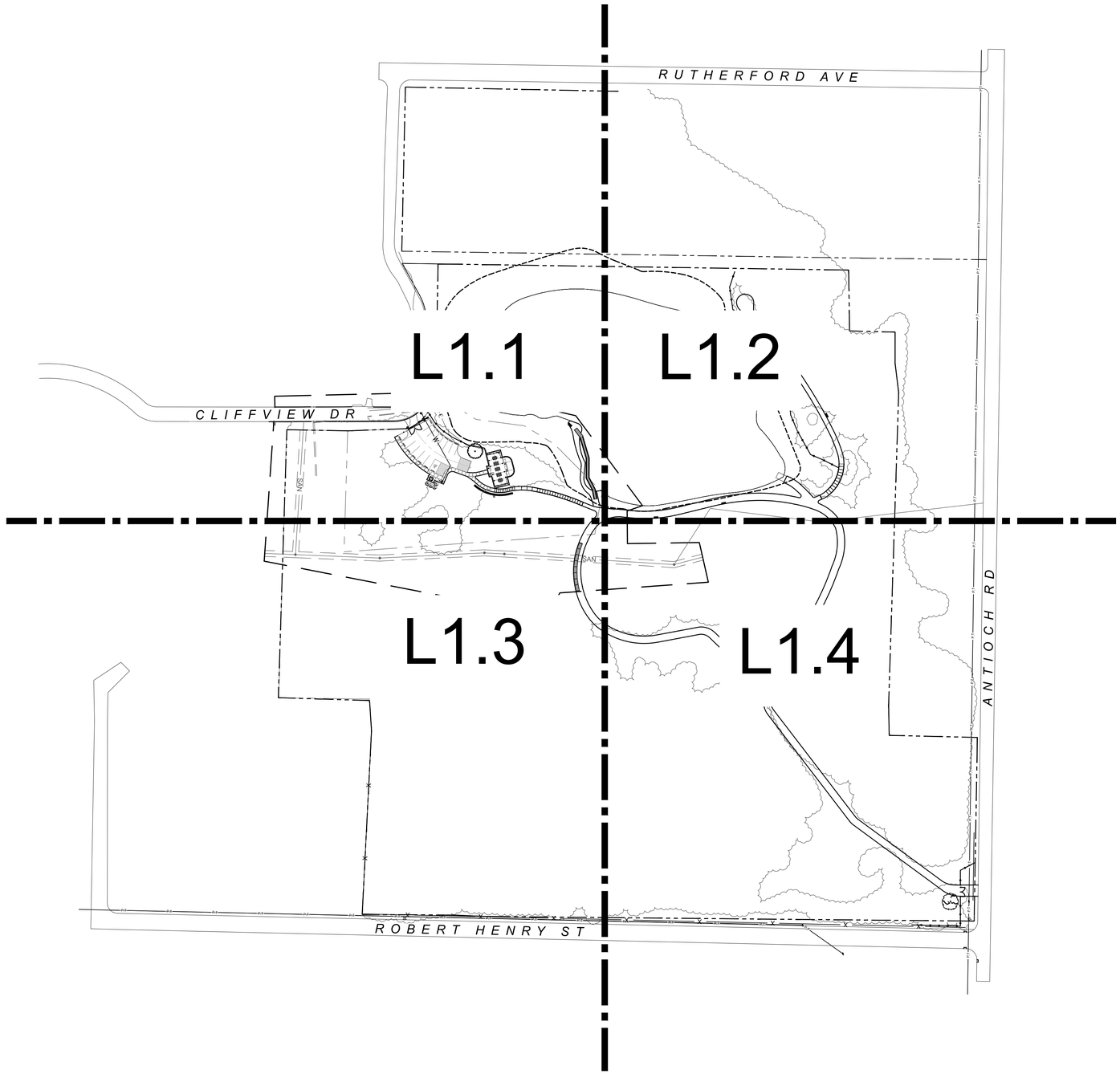

0 50 100 200 FT

N

01 OVERALL PLAN
SCALE: 1"=100'-0"

OAK HAVEN
STUDIO
986 COLE STREET
MACON, GA 31201
478.747.0250

CLIFFVIEW PARK
MACON, GA 31206

GEORGIA REGISTERED No. LA001917 LANDSCAPE ARCHITECT LAURIE FICKLING

KEY PLAN:

REVISIONS:

#	DATE	DESCRIPTION

DATE: SEPTEMBER 22, 2023

OVERALL PLAN

SHEET:

L1.0

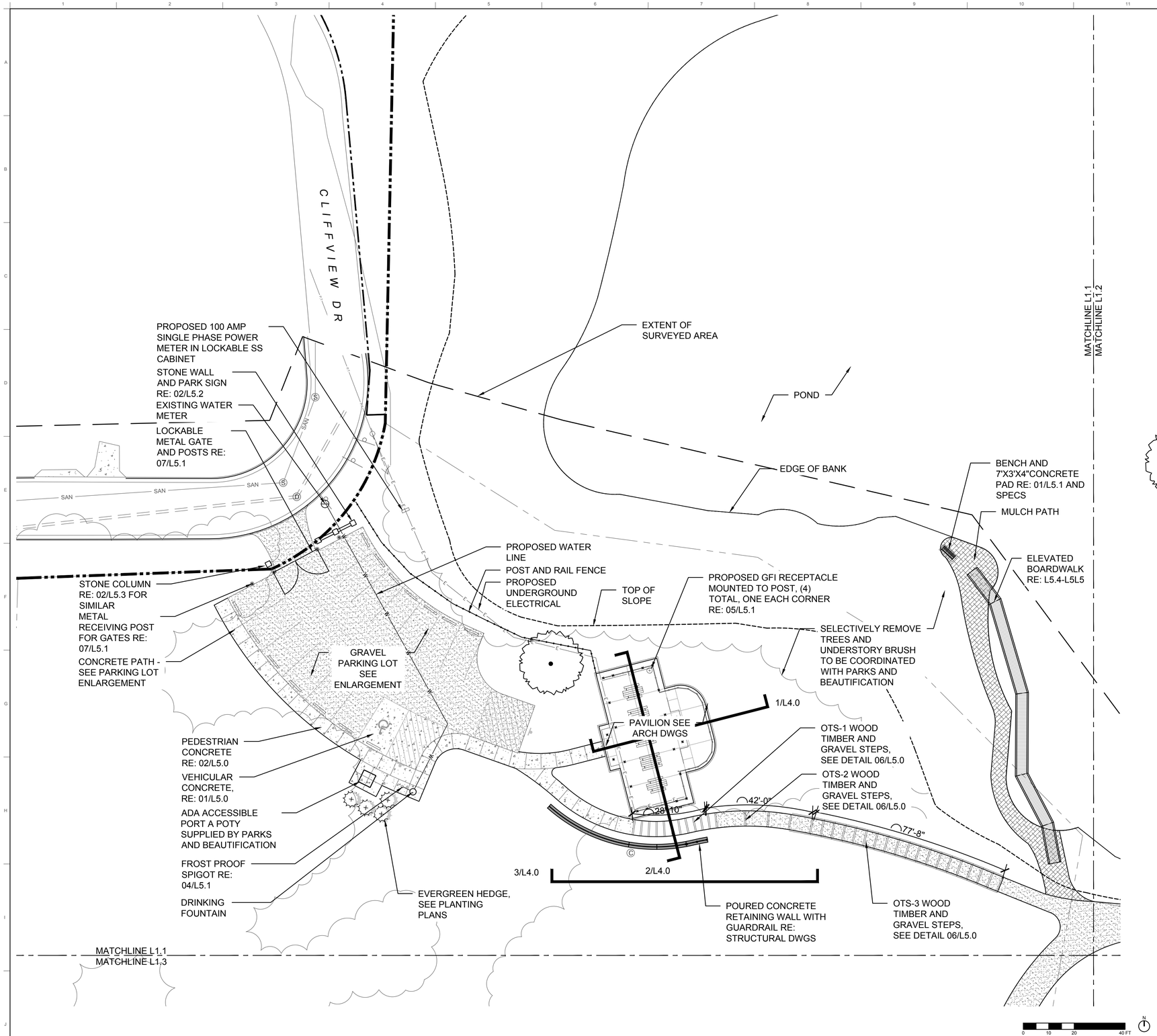

01 LAYOUT & MATERIALS PLAN ENLARGEMENT

SCALE: 1"=20'-0"

SITE LEGEND & DETAIL KEYNOTES

	DETAIL
PROPERTY LINE	
MATCHLINE	
EDGE OF BANK	
TOP OF SLOPE	
EXTENT OF SURVEYED AREA	
POST AND RAIL FENCE	06/L5.1
PROPOSED WATER LINE	
PROPOSED ELECTRICAL LINE	

PAVING	DETAIL
GRAVEL PAVING	04&07/L5.0
CONCRETE PAVING	01&02/L5.0
MULCH PATH	05/L5.0

SITE FURNISHINGS	DETAIL
BENCH	01/L5.1
PICNIC TABLE	02/L5.1
TRASH RECEPTACLE	03/L5.1

PLANTING

PROPOSED TREES AND SHRUBS - SEE PLANTING PLANS

EXISTING

- EXISTING SEWER LINE
- EXISTING STORM LINE
- EXISTING OVERHEAD ELEC LINE
- EXISTING CHAIN LINK FENCE
- EXISTING WATER METER
- EXISTING FIRE HYDRANT
- EXISTING VEGETATION

NOTES

1. ALL SITE IMPROVEMENTS MUST BE FIELD SURVEYED AND STAKED BY CONTRACTOR. OWNER'S REPRESENTATIVE SHALL APPROVE STAKED LOCATION OF IMPROVEMENTS PRIOR TO INSTALLATION.
2. OWNER'S REPRESENTATIVE OR LANDSCAPE ARCHITECT SHALL APPROVE FINAL STAKING BY CONTRACTOR OF ALL CONCRETE FLATWORK PRIOR TO CONSTRUCTION AND ALL FORM WORK PRIOR TO POURING.
3. ALL DIMENSIONS SHALL BE FIELD VERIFIED BY CONTRACTOR PRIOR TO CONSTRUCTION. ANY DEVIATION FROM THESE PLANS MUST BE APPROVED BY OWNER'S REPRESENTATIVE OR LANDSCAPE ARCHITECT PRIOR TO CONSTRUCTION.
4. PRIOR TO EXCAVATION, UNDERGROUND UTILITIES MUST BE FIELD VERIFIED (SEE GENERAL NOTES).
5. DO NOT SCALE THE PLANS. DIMENSIONS SUPERSEDE DRAWING SCALES. VERIFY LAYOUT PRIOR TO EXCAVATION.
6. DIMENSIONS ARE DRAWN TO FACE OF CURB, WALL, AND EDGE UNLESS OTHERWISE SPECIFIED.
7. IF THERE IS A DISCREPANCY BETWEEN THE PLANS AND SPECIFICATIONS, THE SPECIFICATIONS WILL SUPERSEDE PLANS.

OAK HAVEN STUDIO
986 COLE STREET
MACON, GA 31201
478.747.0250

CLIFFVIEW PARK

MACON, GA 31206

GEORGIA REGISTERED LANDSCAPE ARCHITECT No. LA001917 LAURIE FICKLING

KEY PLAN:

REVISIONS:

#	DATE	DESCRIPTION

DATE: SEPTEMBER 22, 2023

LAYOUT & MATERIALS PLAN ENLARGEMENT

SHEET:

L1.1

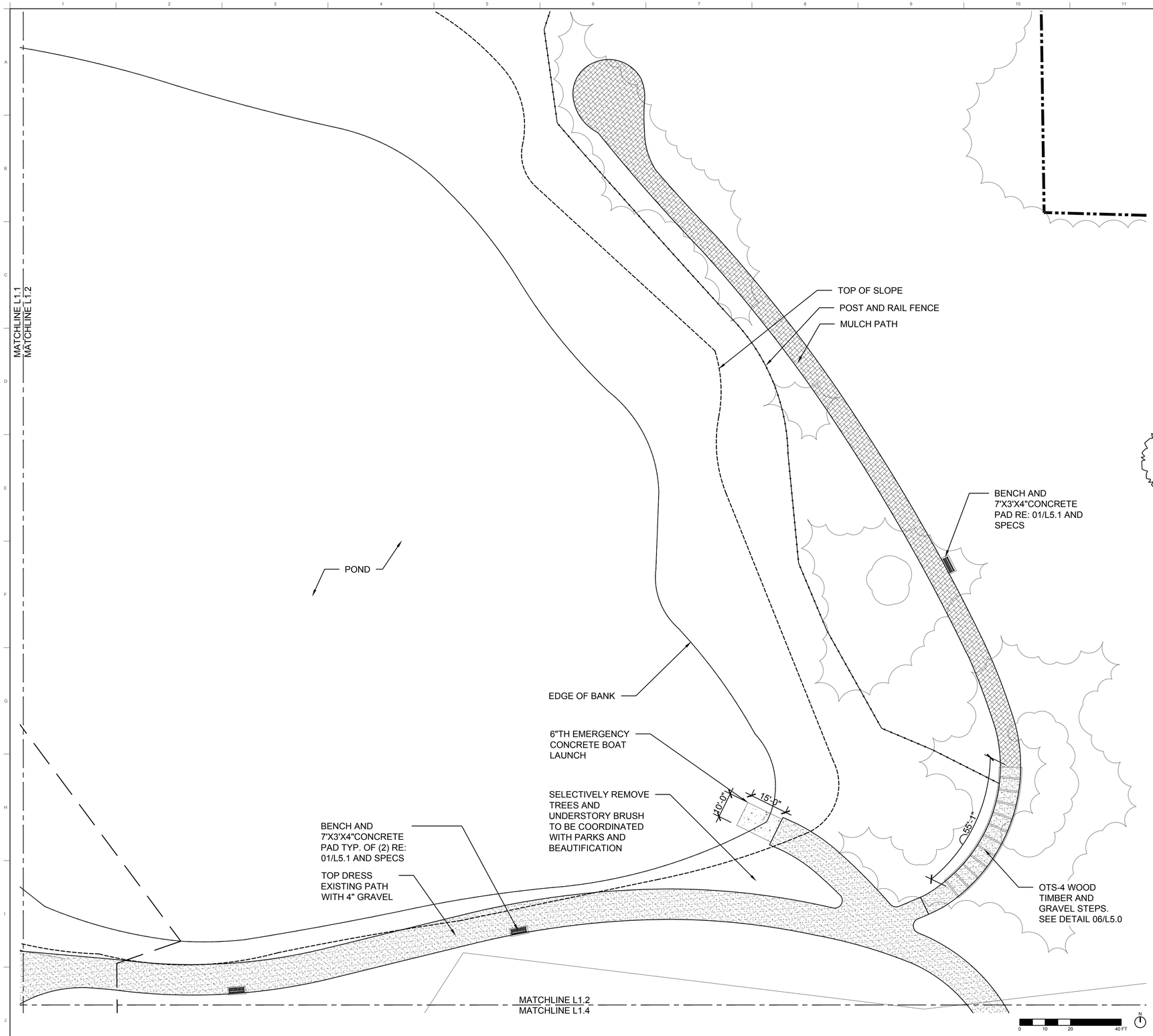

01 LAYOUT & MATERIALS PLAN ENLARGEMENT

SCALE: 1"=20'-0"

SITE LEGEND & DETAIL KEYNOTES

	DETAIL
PROPERTY LINE	
MATCHLINE	
EDGE OF BANK	
TOP OF SLOPE	
EXTENT OF SURVEYED AREA	
POST AND RAIL FENCE	06/L5.1
PROPOSED WATER LINE	
PROPOSED ELECTRICAL LINE	

PAVING	DETAIL
GRAVEL PAVING	04&07/L5.0
CONCRETE PAVING	01&02/L5.0
MULCH PATH	05/L5.0

SITE FURNISHINGS	DETAIL
BENCH	01/L5.1
PICNIC TABLE	02/L5.1
TRASH RECEPTACLE	03/L5.1

PLANTING

PROPOSED TREES AND SHRUBS
- SEE PLANTING PLANS

EXISTING

SAN	EXISTING SEWER LINE
	EXISTING STORM LINE
P,T	EXISTING OVERHEAD ELEC LINE
X X	EXISTING CHAIN LINK FENCE
	EXISTING WATER METER
	EXISTING FIRE HYDRANT
	EXISTING VEGETATION

NOTES

1. ALL SITE IMPROVEMENTS MUST BE FIELD SURVEYED AND STAKED BY CONTRACTOR. OWNER'S REPRESENTATIVE SHALL APPROVE STAKED LOCATION OF IMPROVEMENTS PRIOR TO INSTALLATION.
2. OWNER'S REPRESENTATIVE OR LANDSCAPE ARCHITECT SHALL APPROVE FINAL STAKING BY CONTRACTOR OF ALL CONCRETE FLATWORK PRIOR TO CONSTRUCTION AND ALL FORM WORK PRIOR TO POURING.
3. ALL DIMENSIONS SHALL BE FIELD VERIFIED BY CONTRACTOR PRIOR TO CONSTRUCTION. ANY DEVIATION FROM THESE PLANS MUST BE APPROVED BY OWNER'S REPRESENTATIVE OR LANDSCAPE ARCHITECT PRIOR TO CONSTRUCTION.
4. PRIOR TO EXCAVATION, UNDERGROUND UTILITIES MUST BE FIELD VERIFIED (SEE GENERAL NOTES).
5. DO NOT SCALE THE PLANS. DIMENSIONS SUPERSEDE DRAWING SCALES. VERIFY LAYOUT PRIOR TO EXCAVATION.
6. DIMENSIONS ARE DRAWN TO FACE OF CURB, WALL, AND EDGE UNLESS OTHERWISE SPECIFIED.
7. IF THERE IS A DISCREPANCY BETWEEN THE PLANS AND SPECIFICATIONS, THE SPECIFICATIONS WILL SUPERSEDE PLANS.

OAK HAVEN
STUDIO
986 COLE STREET
MACON, GA 31201
478.747.0250

CLIFFVIEW PARK

MACON, GA 31206

GEORGIA REGISTERED No. LA001917 LANDSCAPE ARCHITECT LAURIE FICKLING

KEY PLAN:

REVISIONS:

#	DATE	DESCRIPTION

DATE: SEPTEMBER 22, 2023

LAYOUT & MATERIALS PLAN ENLARGEMENT

SHEET:

L1.2

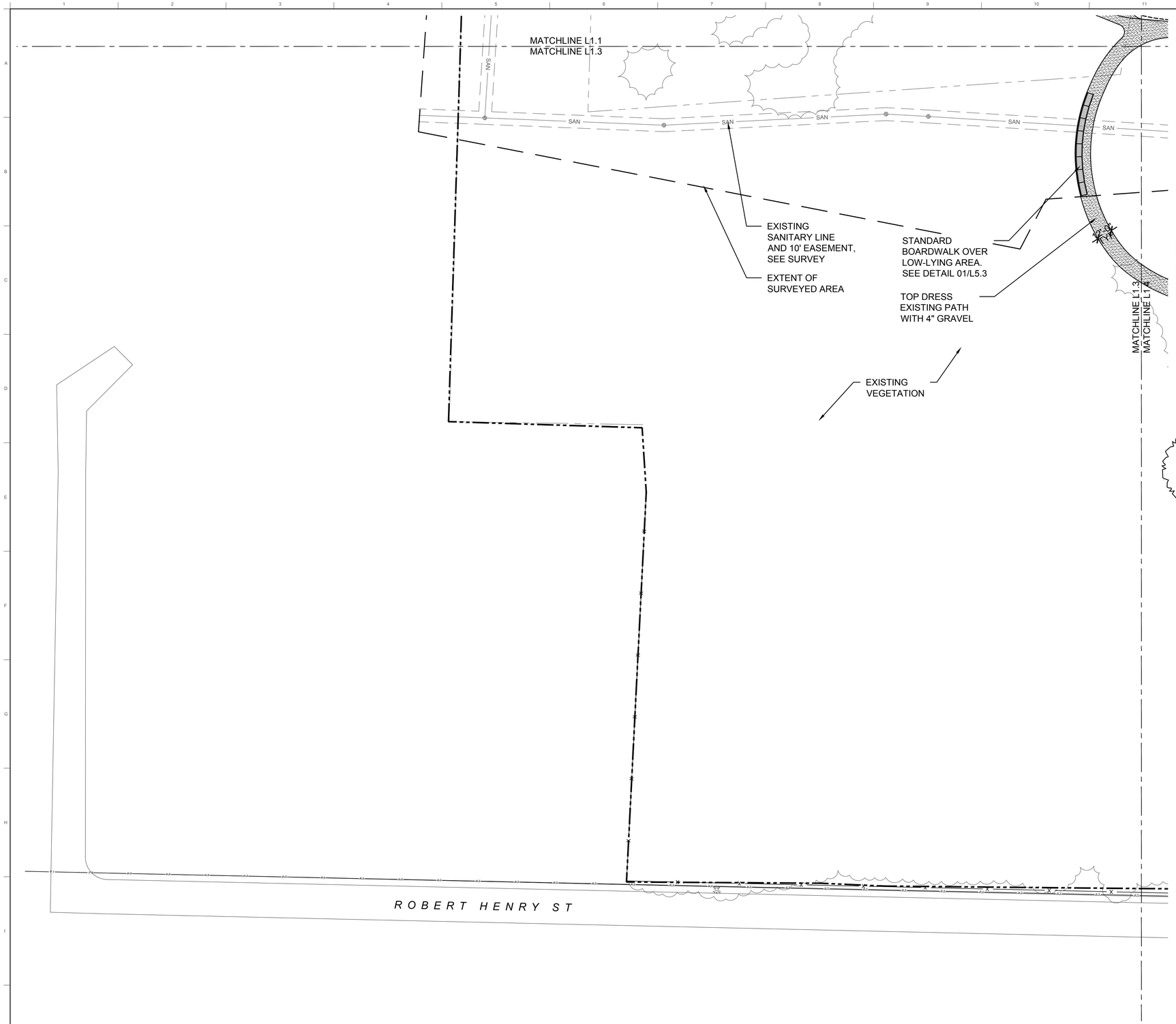

01 LAYOUT & MATERIALS PLAN ENLARGEMENT

SCALE: 1"=40'-0"

SITE LEGEND & DETAIL KEYNOTES

	DETAIL
PROPERTY LINE	
MATCHLINE	
EDGE OF BANK	
TOP OF SLOPE	
EXTENT OF SURVEYED AREA	
POST AND RAIL FENCE	06/L5.1
PROPOSED WATER LINE	
PROPOSED ELECTRICAL LINE	

PAVING	DETAIL
GRAVEL PAVING	04&07/L5.0
CONCRETE PAVING	01&02/L5.0
MULCH PATH	05/L5.0

SITE FURNISHINGS	DETAIL
BENCH	01/L5.1
PICNIC TABLE	02/L5.1
TRASH RECEPTACLE	03/L5.1

PLANTING

PROPOSED TREES AND SHRUBS - SEE PLANTING PLANS

EXISTING

- EXISTING SEWER LINE
- EXISTING STORM LINE
- EXISTING OVERHEAD ELEC LINE
- EXISTING CHAIN LINK FENCE
- EXISTING WATER METER
- EXISTING FIRE HYDRANT
- EXISTING VEGETATION

NOTES

1. ALL SITE IMPROVEMENTS MUST BE FIELD SURVEYED AND STAKED BY CONTRACTOR. OWNER'S REPRESENTATIVE SHALL APPROVE STAKED LOCATION OF IMPROVEMENTS PRIOR TO INSTALLATION.
2. OWNER'S REPRESENTATIVE OR LANDSCAPE ARCHITECT SHALL APPROVE FINAL STAKING BY CONTRACTOR OF ALL CONCRETE FLATWORK PRIOR TO CONSTRUCTION AND ALL FORM WORK PRIOR TO POURING.
3. ALL DIMENSIONS SHALL BE FIELD VERIFIED BY CONTRACTOR PRIOR TO CONSTRUCTION. ANY DEVIATION FROM THESE PLANS MUST BE APPROVED BY OWNER'S REPRESENTATIVE OR LANDSCAPE ARCHITECT PRIOR TO CONSTRUCTION.
4. PRIOR TO EXCAVATION, UNDERGROUND UTILITIES MUST BE FIELD VERIFIED (SEE GENERAL NOTES).
5. DO NOT SCALE THE PLANS. DIMENSIONS SUPERSEDE DRAWING SCALES. VERIFY LAYOUT PRIOR TO EXCAVATION.
6. DIMENSIONS ARE DRAWN TO FACE OF CURB, WALL, AND EDGE UNLESS OTHERWISE SPECIFIED.
7. IF THERE IS A DISCREPANCY BETWEEN THE PLANS AND SPECIFICATIONS, THE SPECIFICATIONS WILL SUPERSEDE PLANS.

OAK HAVEN STUDIO
986 COLE STREET
MACON, GA 31201
478.747.0250

CLIFFVIEW PARK

MACON, GA 31206

GEORGIA REGISTERED No. LA001917 LANDSCAPE ARCHITECT LAURIE FICKLING

KEY PLAN:

REVISIONS:

#	DATE	DESCRIPTION

DATE: SEPTEMBER 22, 2023

LAYOUT & MATERIALS PLAN ENLARGEMENT

SHEET:

L1.3

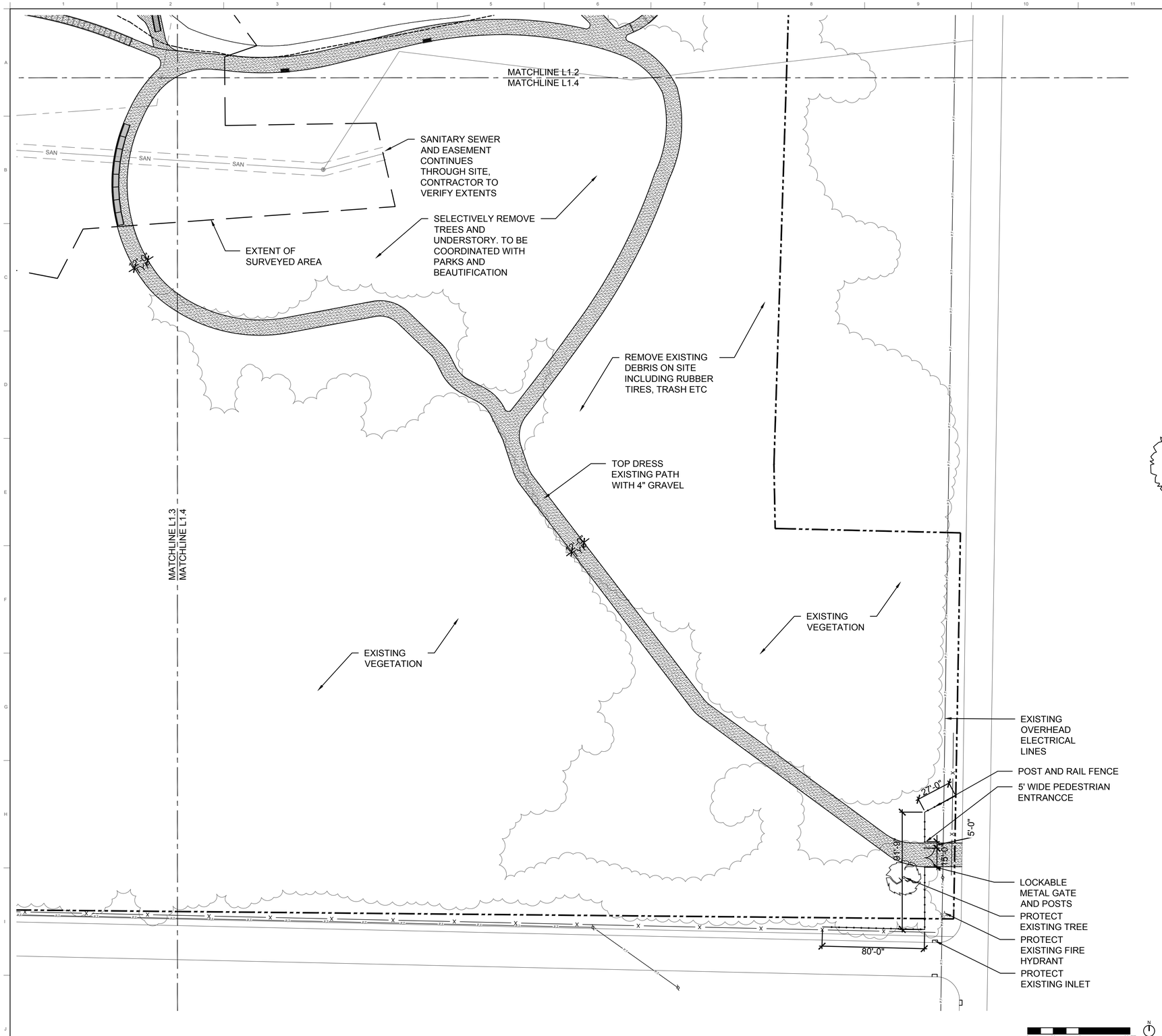

01 LAYOUT & MATERIALS PLAN ENLARGEMENT

SCALE: 1"=40'-0"

SITE LEGEND & DETAIL KEYNOTES

	DETAIL
PROPERTY LINE	
MATCHLINE	
EDGE OF BANK	
TOP OF SLOPE	
EXTENT OF SURVEYED AREA	
POST AND RAIL FENCE	06/L5.1
PROPOSED WATER LINE	
PROPOSED ELECTRICAL LINE	

PAVING	DETAIL
GRAVEL PAVING	04&07/L5.0
CONCRETE PAVING	01&02/L5.0
MULCH PATH	05/L5.0

SITE FURNISHINGS	DETAIL
BENCH	01/L5.1
PICNIC TABLE	02/L5.1
TRASH RECEPTACLE	03/L5.1

PLANTING

PROPOSED TREES AND SHRUBS - SEE PLANTING PLANS

EXISTING

- EXISTING SEWER LINE
- EXISTING STORM LINE
- EXISTING OVERHEAD ELEC LINE
- EXISTING CHAIN LINK FENCE
- EXISTING WATER METER
- EXISTING FIRE HYDRANT
- EXISTING VEGETATION

NOTES

1. ALL SITE IMPROVEMENTS MUST BE FIELD SURVEYED AND STAKED BY CONTRACTOR. OWNER'S REPRESENTATIVE SHALL APPROVE STAKED LOCATION OF IMPROVEMENTS PRIOR TO INSTALLATION.
2. OWNER'S REPRESENTATIVE OR LANDSCAPE ARCHITECT SHALL APPROVE FINAL STAKING BY CONTRACTOR OF ALL CONCRETE FLATWORK PRIOR TO CONSTRUCTION AND ALL FORM WORK PRIOR TO POURING.
3. ALL DIMENSIONS SHALL BE FIELD VERIFIED BY CONTRACTOR PRIOR TO CONSTRUCTION. ANY DEVIATION FROM THESE PLANS MUST BE APPROVED BY OWNER'S REPRESENTATIVE OR LANDSCAPE ARCHITECT PRIOR TO CONSTRUCTION.
4. PRIOR TO EXCAVATION, UNDERGROUND UTILITIES MUST BE FIELD VERIFIED (SEE GENERAL NOTES).
5. DO NOT SCALE THE PLANS. DIMENSIONS SUPERSEDE DRAWING SCALES. VERIFY LAYOUT PRIOR TO EXCAVATION.
6. DIMENSIONS ARE DRAWN TO FACE OF CURB, WALL, AND EDGE UNLESS OTHERWISE SPECIFIED.
7. IF THERE IS A DISCREPANCY BETWEEN THE PLANS AND SPECIFICATIONS, THE SPECIFICATIONS WILL SUPERSEDE PLANS.

OAK HAVEN STUDIO
986 COLE STREET
MACON, GA 31201
478.747.0250

CLIFFVIEW PARK

MACON, GA 31206

GEORGIA REGISTERED No. LA001917 LANDSCAPE ARCHITECT LAURIE FICKLING

KEY PLAN:

REVISIONS:

#	DATE	DESCRIPTION

DATE: SEPTEMBER 22, 2023

LAYOUT & MATERIALS PLAN ENLARGEMENT

SHEET:

L1.4

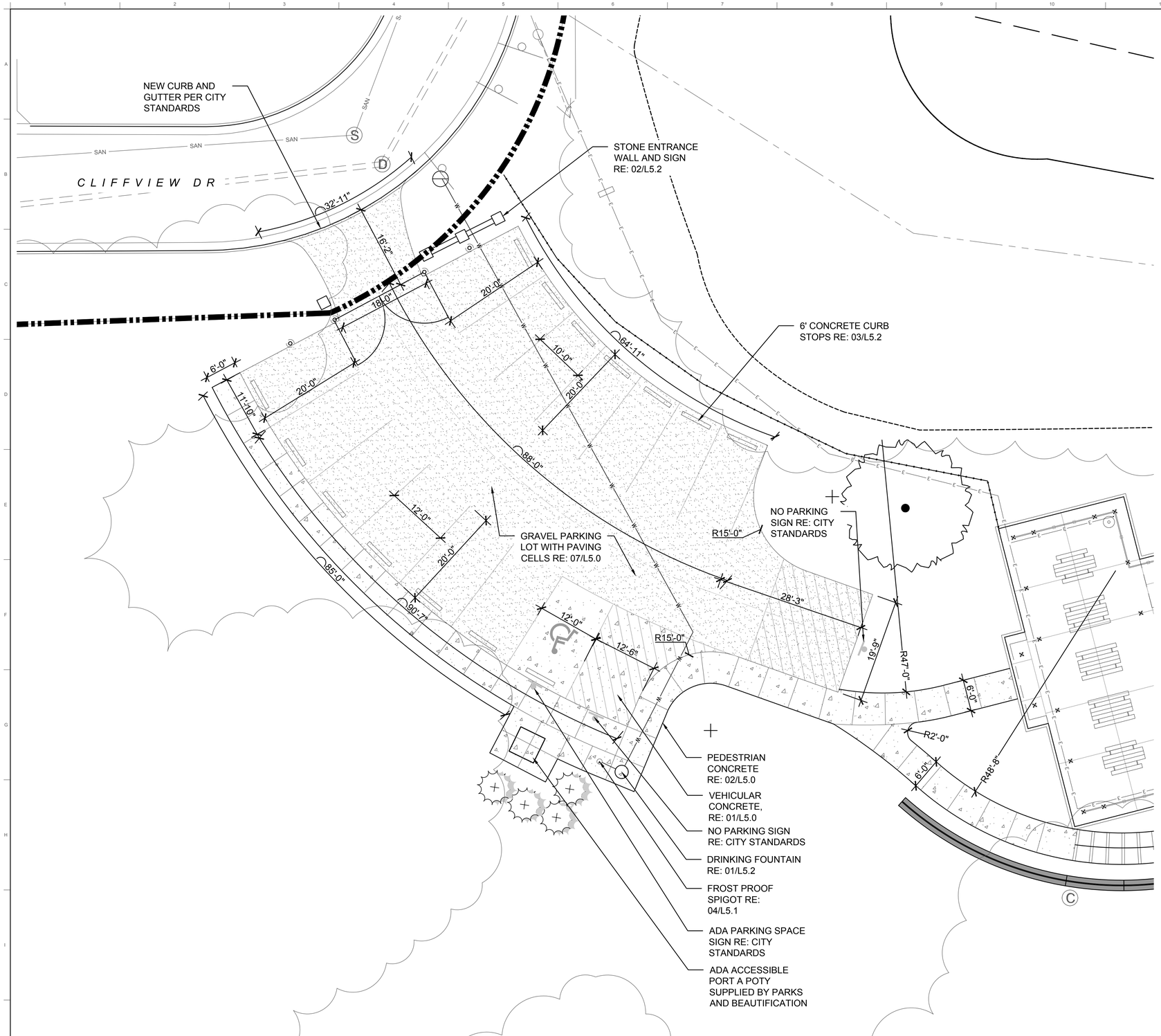

01 PARKING LOT ENLARGEMENT
SCALE: 1"=10'-0"

SITE LEGEND & DETAIL KEYNOTES

	DETAIL
PROPERTY LINE	
MATCHLINE	
EDGE OF BANK	
TOP OF SLOPE	
EXTENT OF SURVEYED AREA	
POST AND RAIL FENCE	06/L5.1
PROPOSED WATER LINE	
PROPOSED ELECTRICAL LINE	

PAVING	DETAIL
GRAVEL PAVING	04&07/L5.0
CONCRETE PAVING	01&02/L5.0
MULCH PATH	05/L5.0

SITE FURNISHINGS	DETAIL
BENCH	01/L5.1
PICNIC TABLE	02/L5.1
TRASH RECEPTACLE	03/L5.1

PLANTING

PROPOSED TREES AND SHRUBS - SEE PLANTING PLANS

EXISTING

- EXISTING SEWER LINE
- EXISTING STORM LINE
- EXISTING OVERHEAD ELEC LINE
- EXISTING CHAIN LINK FENCE
- EXISTING WATER METER
- EXISTING FIRE HYDRANT
- EXISTING VEGETATION

NOTES

1. ALL SITE IMPROVEMENTS MUST BE FIELD SURVEYED AND STAKED BY CONTRACTOR. OWNER'S REPRESENTATIVE SHALL APPROVE STAKED LOCATION OF IMPROVEMENTS PRIOR TO INSTALLATION.
2. OWNER'S REPRESENTATIVE OR LANDSCAPE ARCHITECT SHALL APPROVE FINAL STAKING BY CONTRACTOR OF ALL CONCRETE FLATWORK PRIOR TO CONSTRUCTION AND ALL FORM WORK PRIOR TO POURING.
3. ALL DIMENSIONS SHALL BE FIELD VERIFIED BY CONTRACTOR PRIOR TO CONSTRUCTION. ANY DEVIATION FROM THESE PLANS MUST BE APPROVED BY OWNER'S REPRESENTATIVE OR LANDSCAPE ARCHITECT PRIOR TO CONSTRUCTION.
4. PRIOR TO EXCAVATION, UNDERGROUND UTILITIES MUST BE FIELD VERIFIED (SEE GENERAL NOTES).
5. DO NOT SCALE THE PLANS. DIMENSIONS SUPERSEDE DRAWING SCALES. VERIFY LAYOUT PRIOR TO EXCAVATION.
6. DIMENSIONS ARE DRAWN TO FACE OF CURB, WALL, AND EDGE UNLESS OTHERWISE SPECIFIED.
7. IF THERE IS A DISCREPANCY BETWEEN THE PLANS AND SPECIFICATIONS, THE SPECIFICATIONS WILL SUPERSEDE PLANS.

OAK HAVEN STUDIO
986 COLE STREET
MACON, GA 31201
478.747.0250

CLIFFVIEW PARK
MACON, GA 31206

GEORGIA REGISTERED No. LA001917 LANDSCAPE ARCHITECT LAURIE FICKLING

KEY PLAN:

REVISIONS:

#	DATE	DESCRIPTION

DATE: SEPTEMBER 22, 2023

PARKING LOT ENLARGEMENT

SHEET:

L1.5

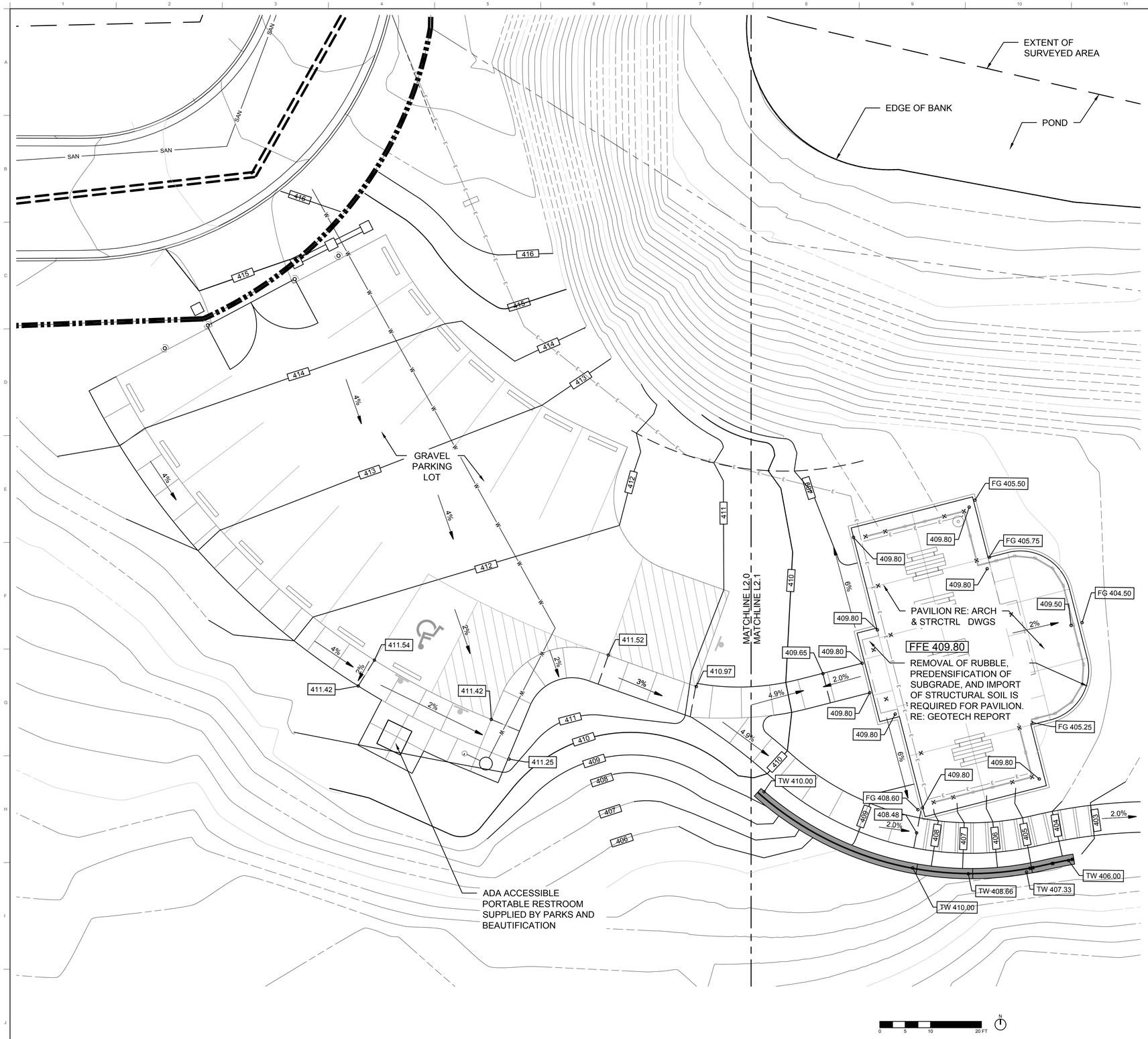

01 GRADING PLAN ENLARGEMENT

SCALE: 1"=10'-0"

GRADINGLEGEND

- PROPERTY LINE
- SAN — EXISTING SEWER LINE
- EXISTING STORM LINE
- P.T — EXISTING OVERHEAD ELEC LINE
- X — EXISTING CHAIN LINK FENCE
- EXISTING WATER METER
- EXISTING FIRE HYDRANT
- EXISTING VEGETATION
- EXISTING CONTOUR - MINOR
- 405 — EXISTING CONTOUR - MAJOR
- 402 — PROPOSED CONTOUR - MINOR
- PROPOSED CONTOUR - MAJOR
- GRADE BREAK
- 2.0% — SLOPE
- 400.00 — SPOT GRADE

NOTES

1. REFERENCE GEOTECHNICAL REPORT RECOMMENDATIONS BY PRESTON ENGINEERING DATED 08/03/23 REGARDING REMOVAL OF SOILS CONTAINING RUBBLE FROM PREVIOUS DEMOLITION DONE ON SITE PARTICULARLY AT THE PAVILION AREA. IMPORT OF STRUCTURAL SOILS IS REQUIRED PER GEOTECH RECOMMENDATIONS.
2. THE SURVEY CONDUCTED FOR THE PROJECT COVERS ONLY A PORTION OF THE SITE. SURVEY CONDUCTED BY WELLSTON ASSOCIATES LAND SURVEYORS 4/6/2023.
3. THE EXISTING CONDITION PLAN WAS CREATED THROUGH GIS DATA AND FIELD OBSERVATION. CONTRACTOR SHALL VERIFY ALL DIMENSIONS, OBJECTS, AND UTILITIES IN FIELD.
8. REFERENCE EROSION AND SEDIMENT CONTROL PLANS BY POLYSCAPE DATED 8/30/23. CONTRACTOR SHALL FOLLOW BMP'S FOR EROSION CONTROL AND ALL APPLICABLE STATE AND LOCAL CODES FOR STORMWATER MANAGEMENT.
9.
10. CONTRACTOR SHALL BE RESPONSIBLE FOR NOTIFYING OWNER'S REPRESENTATIVE OF ANY DISCREPANCIES BETWEEN FIELD CONDITIONS AND PLANS FOR BACK OF CURB ELEVATIONS, BUILDING FLOOR ELEVATIONS, ETC.
11. PAVED AREAS SHALL HAVE A MAXIMUM SLOPE OF 5% ON THE SURFACE IN DIRECTION OF TRAVEL AND 2% CROSS SLOPE UNLESS OTHERWISE SPECIFIED.
12. CONTRACTOR SHALL BE RESPONSIBLE FOR MAINTAINING POSITIVE DRAINAGE AT ALL TIMES DURING CONSTRUCTION.
13. ALL FINISHED HARDSCAPE AND LANDSCAPE AREAS SHALL BE SLOPED TO MAINTAIN POSITIVE DRAINAGE AWAY FROM BUILDINGS.
14. GRADES IN LANDSCAPE AREAS SHALL SLOPE A MINIMUM OF 2% AND A MAXIMUM OF 3:1 UNLESS OTHERWISE NOTED OR APPROVED.
15. FEATHER ALL FINISH GRADES TO MEET EXISTING GRADES WITHOUT ABRUPT CHANGES IN SLOPE.
7. CONTRACTOR SHALL STABILIZE AND MAINTAIN EXISTING SLOPES AND GRADES AS REQUIRED AND/OR AS DIRECTED BY THE OWNER'S REPRESENTATIVE. CONTRACTOR SHALL REPAIR ANY DAMAGE CAUSED BY EROSION OR SLOPE FAILURE AT NO ADDITIONAL COST TO THE OWNER

OAK HAVEN STUDIO
986 COLE STREET
MACON, GA 31201
478.747.0250

CLIFFVIEW PARK

MACON, GA 31206

GEORGIA REGISTERED LANDSCAPE ARCHITECT
No. LA001917
LAURIE FICKLING

KEY PLAN:

REVISIONS:

#	DATE	DESCRIPTION

DATE: SEPTEMBER 22, 2023

GRADING PLAN ENLARGEMENT

SHEET:

L2.0

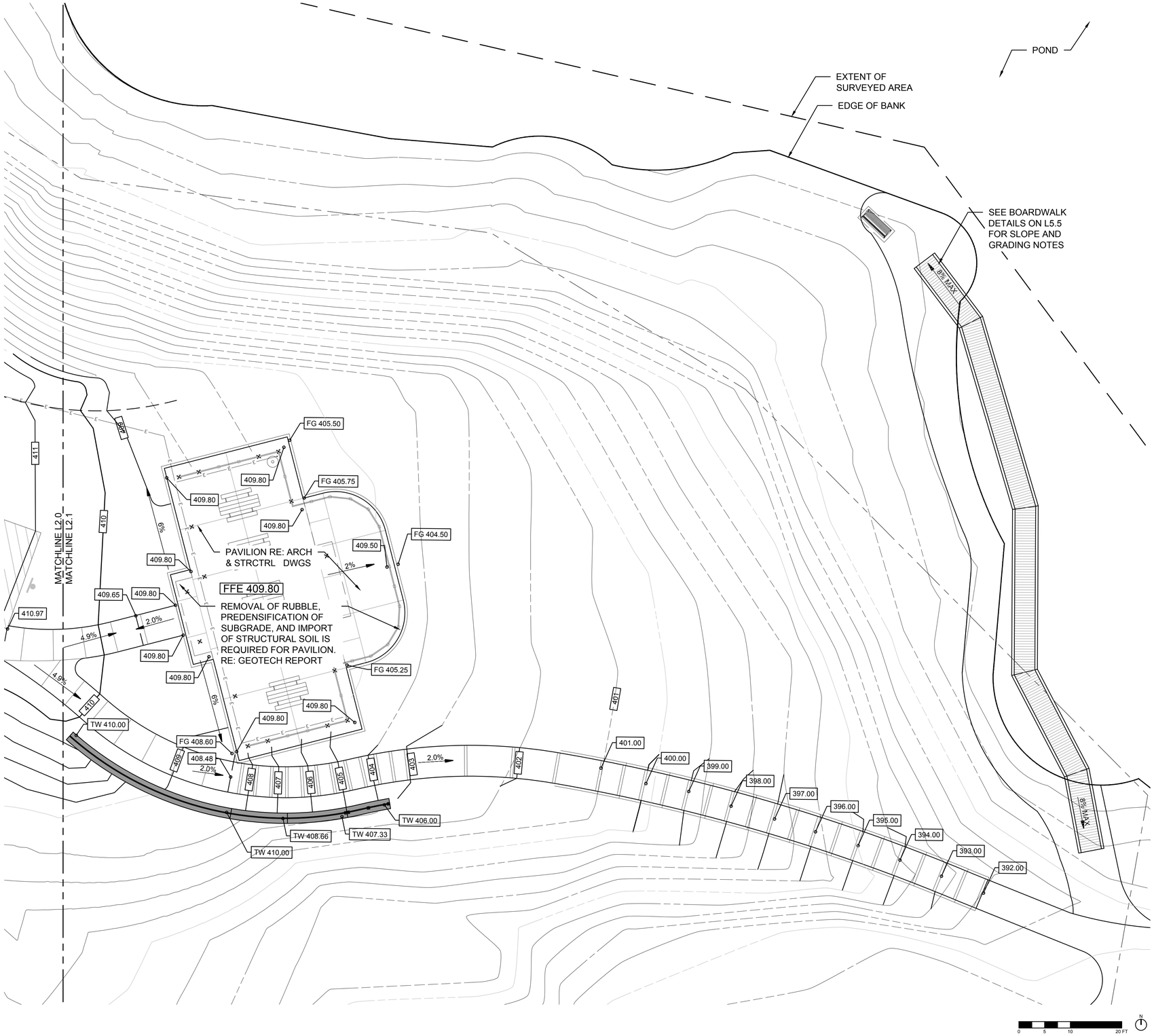

01 GRADING PLAN ENLARGEMENT

SCALE: 1"=10'-0"

GRADINGLEGEND

- PROPERTY LINE
- SAN — EXISTING SEWER LINE
- EXISTING STORM LINE
- P,T — EXISTING OVERHEAD ELEC LINE
- X — EXISTING CHAIN LINK FENCE
- EXISTING WATER METER
- EXISTING FIRE HYDRANT
- EXISTING VEGETATION
- EXISTING CONTOUR - MINOR
- 405 — EXISTING CONTOUR - MAJOR
- 402 — PROPOSED CONTOUR - MINOR
- PROPOSED CONTOUR - MAJOR
- GRADE BREAK
- 2.0% — SLOPE
- 400.00 — SPOT GRADE

NOTES

1. REFERENCE GEOTECHNICAL REPORT RECOMMENDATIONS BY PRESTON ENGINEERING DATED 08/03/23 REGARDING REMOVAL OF SOILS CONTAINING RUBBLE FROM PREVIOUS DEMOLITION DONE ON SITE PARTICULARLY AT THE PAVILION AREA. IMPORT OF STRUCTURAL SOILS IS REQUIRED PER GEOTECH RECOMMENDATIONS.
2. THE SURVEY CONDUCTED FOR THE PROJECT COVERS ONLY A PORTION OF THE SITE. SURVEY CONDUCTED BY WELLSTON ASSOCIATES LAND SURVEYORS 4/6/2023.
3. THE EXISTING CONDITION PLAN WAS CREATED THROUGH GIS DATA AND FIELD OBSERVATION. CONTRACTOR SHALL VERIFY ALL DIMENSIONS, OBJECTS, AND UTILITIES IN FIELD.
8. REFERENCE EROSION AND SEDIMENT CONTROL PLANS BY POLYSCAPE DATED 8/30/23. CONTRACTOR SHALL FOLLOW BMP'S FOR EROSION CONTROL AND ALL APPLICABLE STATE AND LOCAL CODES FOR STORMWATER MANAGEMENT.
9.
10. CONTRACTOR SHALL BE RESPONSIBLE FOR NOTIFYING OWNER'S REPRESENTATIVE OF ANY DISCREPANCIES BETWEEN FIELD CONDITIONS AND PLANS FOR BACK OF CURB ELEVATIONS, BUILDING FLOOR ELEVATIONS, ETC.
11. PAVED AREAS SHALL HAVE A MAXIMUM SLOPE OF 5% ON THE SURFACE IN DIRECTION OF TRAVEL AND 2% CROSS SLOPE UNLESS OTHERWISE SPECIFIED.
12. CONTRACTOR SHALL BE RESPONSIBLE FOR MAINTAINING POSITIVE DRAINAGE AT ALL TIMES DURING CONSTRUCTION.
13. ALL FINISHED HARDSCAPE AND LANDSCAPE AREAS SHALL BE SLOPED TO MAINTAIN POSITIVE DRAINAGE AWAY FROM BUILDINGS.
14. GRADES IN LANDSCAPE AREAS SHALL SLOPE A MINIMUM OF 2% AND A MAXIMUM OF 3:1 UNLESS OTHERWISE NOTED OR APPROVED.
15. FEATHER ALL FINISH GRADES TO MEET EXISTING GRADES WITHOUT ABRUPT CHANGES IN SLOPE.
7. CONTRACTOR SHALL STABILIZE AND MAINTAIN EXISTING SLOPES AND GRADES AS REQUIRED AND/OR AS DIRECTED BY THE OWNER'S REPRESENTATIVE. CONTRACTOR SHALL REPAIR ANY DAMAGE CAUSED BY EROSION OR SLOPE FAILURE AT NO ADDITIONAL COST TO THE OWNER

OAK HAVEN STUDIO
986 COLE STREET
MACON, GA 31201
478.747.0250

CLIFFVIEW PARK

MACON, GA 31206

GEORGIA REGISTERED No. LA001917 LANDSCAPE ARCHITECT LAURIE FICKLING

KEY PLAN:

REVISIONS:

#	DATE	DESCRIPTION

DATE: SEPTEMBER 22, 2023

GRADING PLAN ENLARGEMENT

SHEET:

L2.1

PLANT SCHEDULE				
TREES	CODE	QTY	BOTANICAL / COMMON NAME	SIZE
	QL	1	QUERCUS LYRATA/OVERCUP OAK	5" CAL
	IC	4	ILEX X 'CONAF' / OAK LEAF HOLLY	8' HT

NOTES

1. CONFIRM PLANTING LOCATION PRIOR TO DIGGING
2. COVER ALL DISTURBED AREAS
3. IMPORT PLANTING SOIL IN AREAS WHERE NATIVE SOIL IS INSUFFICIENT
4. SUBMIT PHOTO OF TREES AND SHRUBS FOR REVIEW AND APPROVAL BY LANDSCAPE ARCHITECT PRIOR TO PROCUREMENT.
5. PROVIDE TEMPORARY IRRIGATION FOR SOD ESTABLISHMENT AND GATOR BAGS FOR TREES.

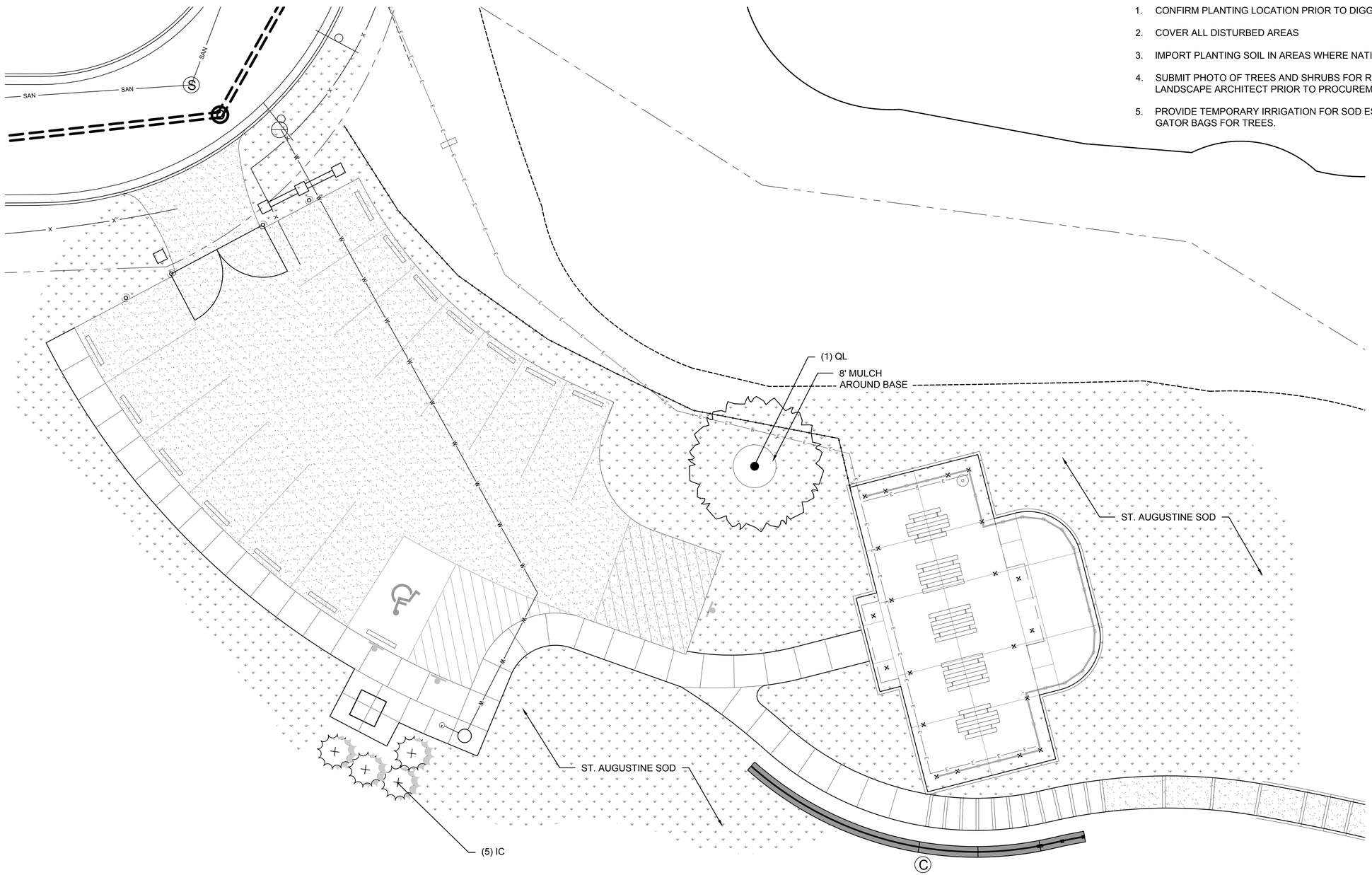

01 ***PLANTING PLAN***
SCALE: 1"=10'-0"

OAK HAVEN
STUDIO
986 COLE STREET
MACON, GA 31201
478.747.0250

CLIFFVIEW PARK
MACON, GA 31206

GEORGIA REGISTERED LANDSCAPE ARCHITECT No. LA001917 LAURIE FICKLING

KEY PLAN:

REVISIONS:

#	DATE	DESCRIPTION

DATE: SEPTEMBER 22, 2023

PLANTING PLAN

SHEET:

L3.0

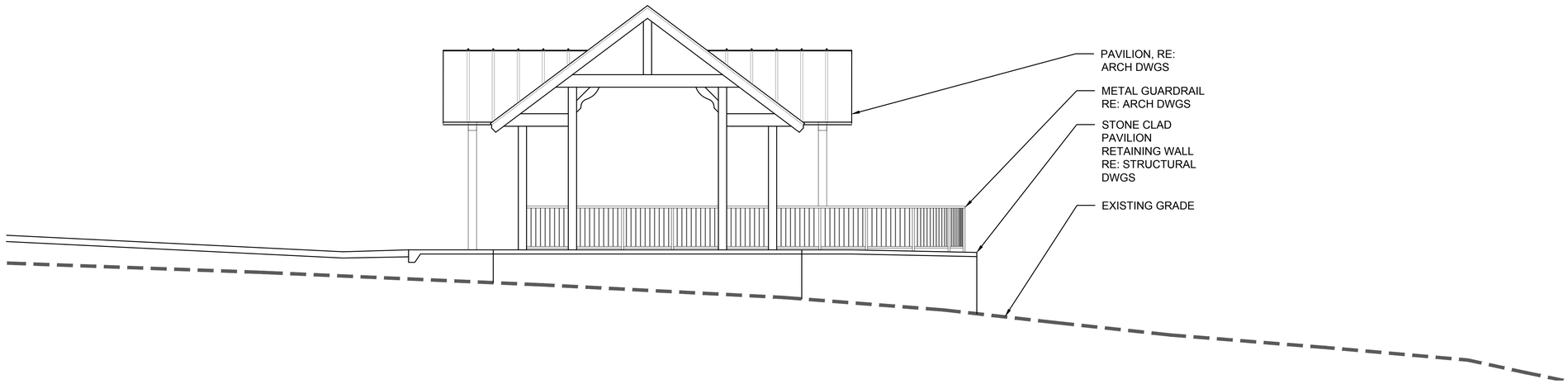

01 ***SITE SECTION***
SCALE: 1"=5'-0"

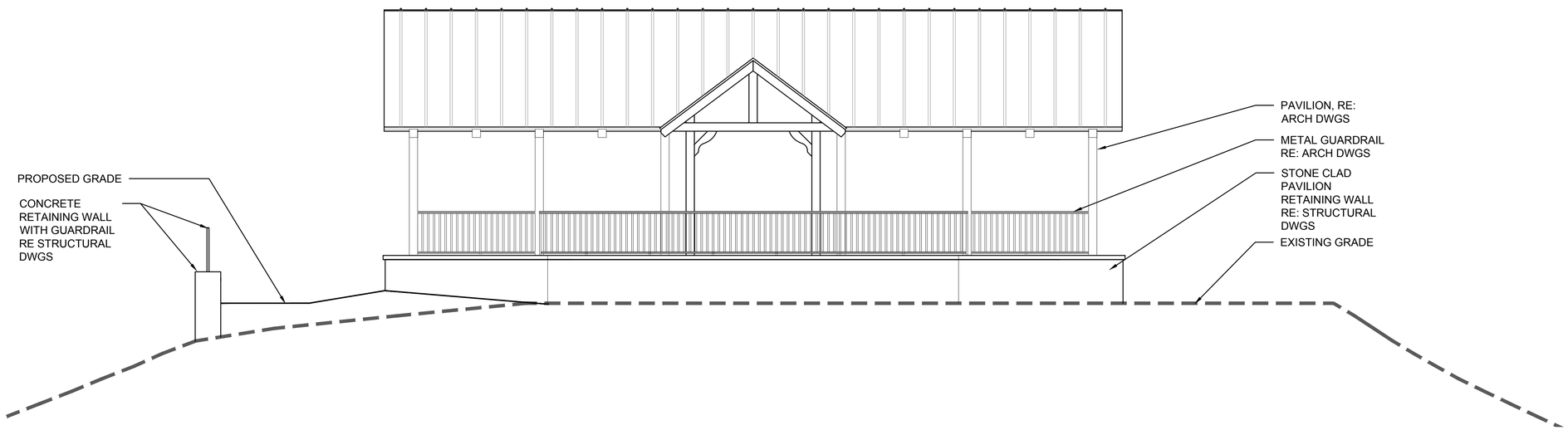

02 ***SITE SECTION***
SCALE: 1"=5'-0"

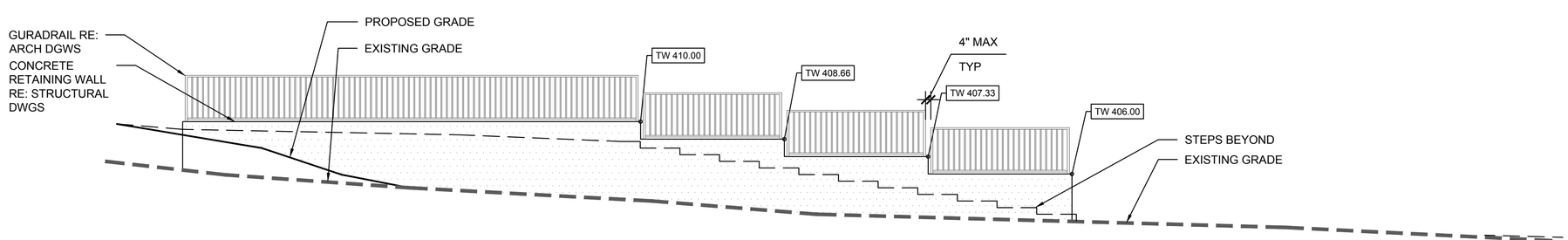

03 ***RETAINING WALL ELEVATION***
SCALE: 1"=5'-0"

OAK HAVEN
STUDIO
986 COLE STREET
MACON, GA 31201
478.747.0250

CLIFFVIEW PARK

MACON, GA 31206

GEORGIA REGISTERED LANDSCAPE ARCHITECT No. LA001917 LAURIE FICKLING

KEY PLAN:

REVISIONS:

#	DATE	DESCRIPTION

DATE: SEPTEMBER 22, 2023

SECTIONS

SHEET:

L4.0

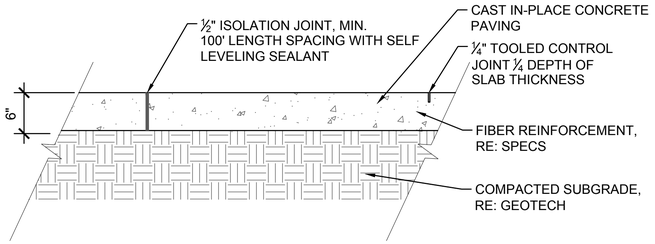

NOTES:
1. REFERENCE SPECIFICATIONS FOR CONCRETE FINISH AND COLOR.
2. REFERENCE PLAN FOR CONTROL JOINT LOCATIONS.
3. CONTRACTOR SHALL PROVIDE ISOLATION JOINTS AT ALL WALLS, BUILDINGS, AND AS DIRECTED BY OWNER'S REPRESENTATIVE UNLESS OTHERWISE INDICATED.

01 CONCRETE PAVING - VEHICULAR
1"=1'-0"

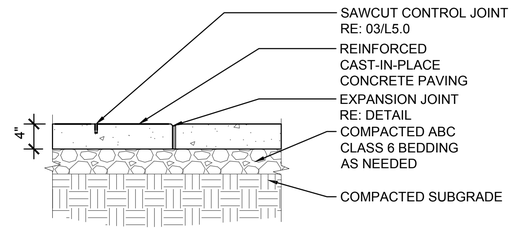

NOTES:
1. REFERENCE PLANS & SPECIFICATIONS FOR FINISHES.
2. REFERENCE SPECIFICATIONS FOR CONCRETE STRENGTH AND REINFORCEMENT REQUIREMENTS.
3. PROVIDE EXPANSION JOINTS PER SPECS.
4. PROVIDE CONTROL JOINTS NOT MORE THAN 10'-0" ON CENTER, OR AS INDICATED ON PLANS.
5. CONTRACTOR SHALL PROVIDE ISOLATION JOINTS AT ALL WALLS AND BUILDINGS UNLESS OTHERWISE INDICATED.
6. CONCRETE WALK TO HAVE A MAXIMUM 2% CROSS SLOPE.

02 CONCRETE PAVING - PEDESTRIAN
1"=1'-0"

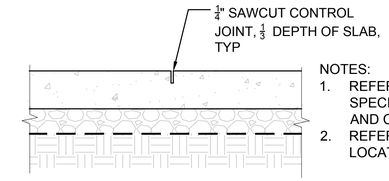

CONTROL JOINT SECTION

NOTES:
1. REFERENCE PLANS AND SPECIFICATIONS FOR CONCRETE FINISH AND COLOR.
2. REFERENCE PLAN FOR CONTROL JOINT LOCATIONS.

03 CONTROL JOINT
1"=1'-0"

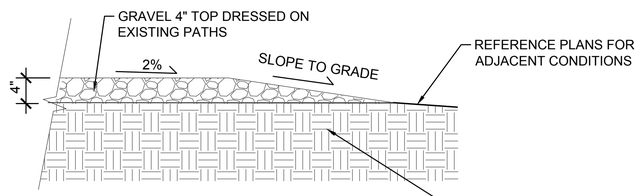

04 GRAVEL PATH
1"=1'-0"

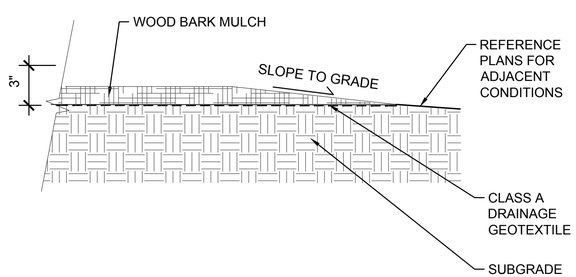

05 MULCH PATH
1"=1'-0"

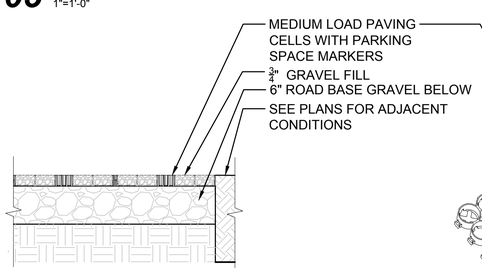

GRAVEL PAVING CELL SECTION

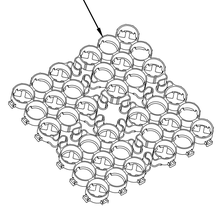

ISOMETRIC

NOTES:
1. PAVING CELLS SHALL BE TRUE GRID OR APPROVED EQUAL.
2. REFERENCE PLANS AND SPECIFICATIONS FOR LAYOUT
3. ORDER PARKING SPACE MARKERS WITH PRODUCT.

07 GRAVEL PAVING CELLS
NOT TO SCALE

OVERLAPPING TIMBER STEP

TYPICAL ID	MATERIAL TYPE	OVERALL LENGTH	OVERALL WIDTH	STEP RUN	COMMENTS
	M2	28'-10"	7'-0"	3'-0"	
	M2	42'-0"	7'-0"	9'-0"	
	M2	77'-8"	7'-0"	4'-4"	
	M2	55'-0"	7'-0"	5'-0"	

N/A WHEN NOT APPLICABLE

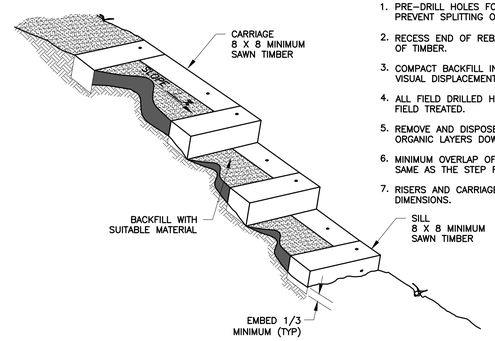

NOTES:
1. PRE-DRILL HOLES FOR REBAR AND PINS TO PREVENT SPLITTING OF SAWN TIMBERS.
2. RECESS END OF REBAR 1/2 INCH BELOW TOP OF TIMBER.
3. COMPACT BACKFILL IN 6 INCH LIFTS UNTIL NO VISUAL DISPLACEMENT.
4. ALL FIELD DRILLED HOLES AND CUTS SHALL BE FIELD TREATED.
5. REMOVE AND DISPOSE OF DUFF AND TOP ORGANIC LAYERS DOWN TO MINERAL SOIL.
6. MINIMUM OVERLAP OF BOTTOM CARRIAGE IS THE SAME AS THE STEP RUN LENGTH.
7. RISERS AND CARRIAGES SHALL BE THE SAME DIMENSIONS.

MATERIAL TYPE

TYPE	MATERIAL	SIZE	SPECIES/ GRADE	PRESERV. TYPE	COMMENTS
M1	LOG				
M2	SAWN TIMBER	8X8	X	P2	
M3	RAIL ROAD TIES				
M4	X				

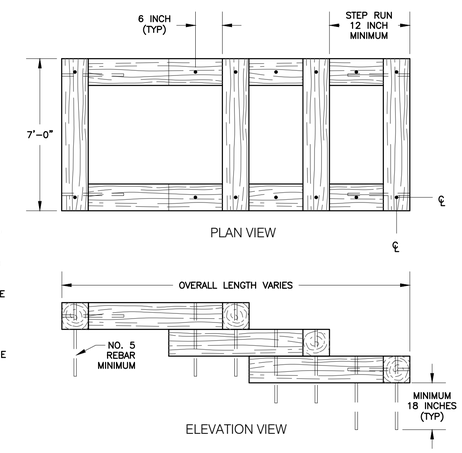

PRESERVATIVE TREATMENT – (REFER TO AWPA USE CATEGORY SYSTEM)

PRESERVATIVE TYPE	TREATMENT TYPE	USE CATEGORY	COMMENTS
P1	WB	UC4A	X
P2	WB	UC3B	
P3	XX	XXXX	

TREATMENT TYPE
WB = WATERBORNE
OT = OIL-BORNE

USE CATEGORY
UC3B = ABOVE GROUND – EXPOSED
UC4A = GROUND CONTACT – GENERAL USE
UC4B = GROUND CONTACT – HEAVY DUTY

06 WOOD TIMBER AND GRAVEL STEPS
NOT TO SCALE

OAK HAVEN STUDIO
986 COLE STREET
MACON, GA 31201
478.747.0250

CLIFFVIEW PARK
MACON, GA 31206

GEORGIA REGISTERED No. LA001917 LANDSCAPE ARCHITECT LAURIE FICKLING

KEY PLAN:

REVISIONS:

#	DATE	DESCRIPTION

DATE: SEPTEMBER 22, 2023

DETAILS

SHEET:

L5.0

NOTE: BENCH RE: SPECS

01 BENCH
NTS

NOTE: TABLE RE: SPECS

02 PICNIC TABLE
NTS

NOTE: TRASH RECEPTACLE RE: SPECS

03 TRASH RECEPTACLE
NTS

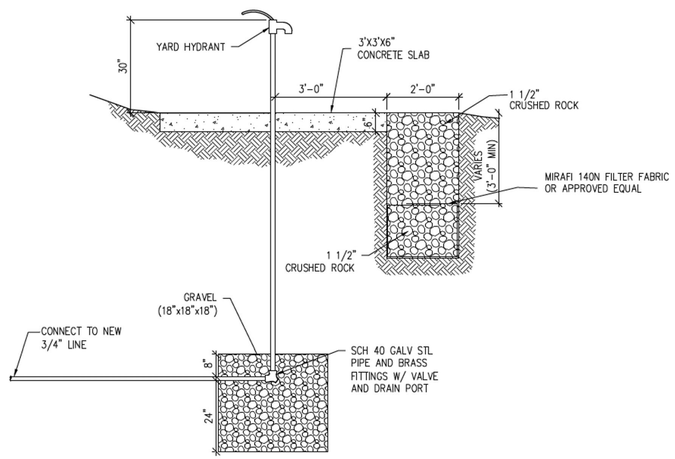

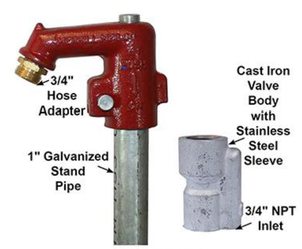

Y1 SERIES

NOTES:
1. MANUFACTURER: MERRILL MANUFACTURING
   HYDRANT TYPE: Y1 SERIES 27" ABOVE GROUND
   WWW.MERRILLMFG.COM OR APPROVED EQUAL

04 FROST PROOF SPIGOT
NTS

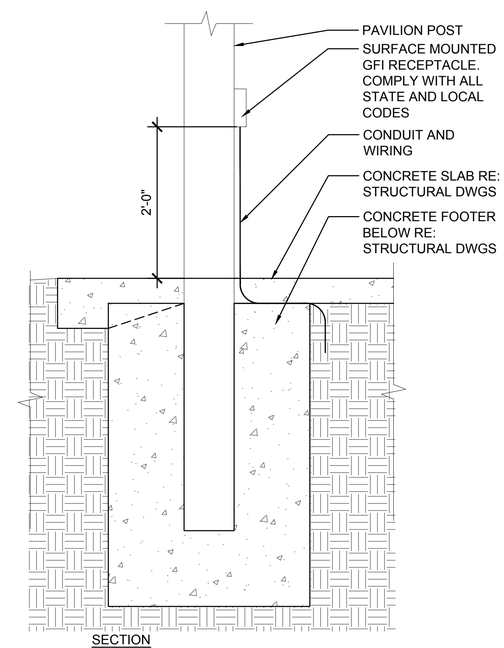

SECTION

05 GFI RECEPTACLE
1"=1'-0"

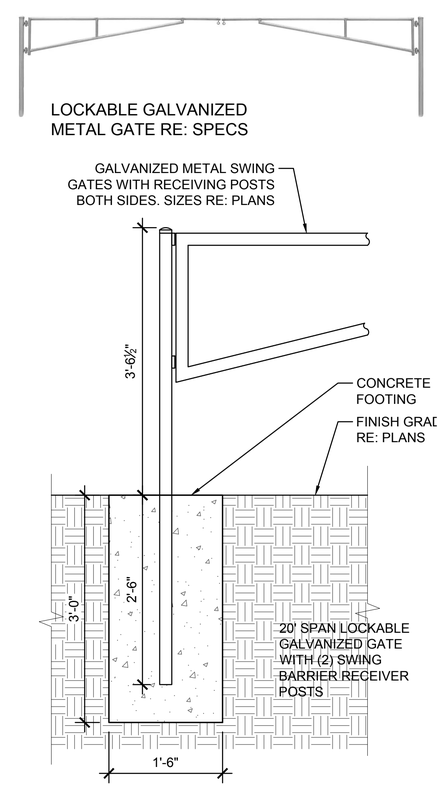

SECTION

07 LOCKABLE METAL GATE
1"=1'-0"

POST AND RAIL FENCE

FENCE			POST							RAIL				
TYPICAL ID	TYPE	HEIGHT	TYPE	SIZE	LENGTH (FEET)	SPACING (FEET)	EMBEDMENT DEPTH	PRESERV. TYPE	POST CONNECTION DETAIL	TYPE	SIZE	LENGTH (FEET)	PRESERV. TYPE	COMMENTS
	D	36"	D	6X6	X	X	X	P X	X	X	X	X	P X	X

N/A WHEN NOT APPLICABLE

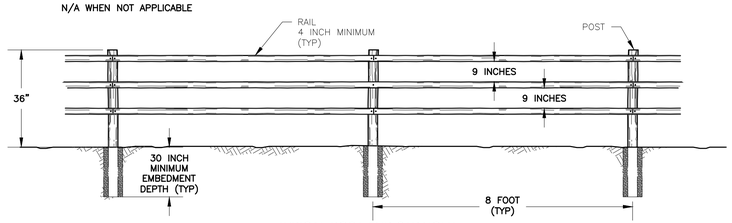

F1 TYPICAL POST AND STRAIGHT RAIL FENCE SECTION

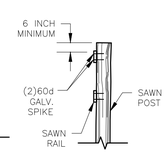

D SAWN LUMBER DETAIL

NOTES:
1. REFER TO THE PUBLICATION "FENCES" PREPARED BY THE MISSOULA TECHNOLOGY AND DEVELOPMENT CENTER FOR ADDITIONAL CONSTRUCTION DETAILS AND INSTALLATION PROCEDURES.
2. FENCE AND GATE LOCATIONS AS STAKED IN THE FIELD.
3. PRE-DRILL HOLES FOR FASTENERS TO PREVENT SPLITTING OF BRACING OR POSTS.
4. COMPACT AND BACKFILL POST HOLES IN 6 INCH LIFTS UNTIL NO VISUAL DISPLACEMENT.

PRESERVATIVE TREATMENT – (REFER TO AWPA USE CATEGORY SYSTEM)

PRESERVATIVE TYPE	TREATMENT TYPE	USE CATEGORY	COMMENTS
P1	WB	UC4A	X
P2	WB	UC3B	
P3	XX	XXXX	

TREATMENT TYPE
WB = WATERBORNE
OT = OIL-BORNE

USE CATEGORY
UC3B = ABOVE GROUND – EXPOSED
UC4A = GROUND CONTACT – GENERAL USE
UC4B = GROUND CONTACT – HEAVY DUTY

06 POST AND RAIL FENCE
NTS

OAK HAVEN STUDIO
986 COLE STREET
MACON, GA 31201
478.747.0250

CLIFFVIEW PARK
MACON, GA 31206

GEORGIA REGISTERED No. LA001917 LANDSCAPE ARCHITECT LAURIE FICKLING

KEY PLAN:

REVISIONS:

#	DATE	DESCRIPTION

DATE: SEPTEMBER 22, 2023

DETAILS

SHEET:

L5.1

MOST DEPENDABLE FOUNTAINS, INC.

MOST DEPENDABLE FOUNTAINS, INC.
5705 COMMANDER DR. P.O. BOX 587
ARLINGTON, TN 38002-0587
PHONE: (901) 867-0039
www.mostdependable.com

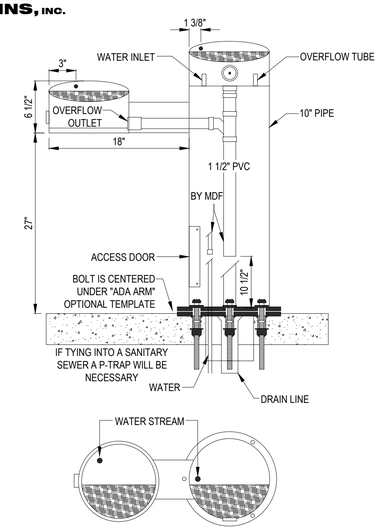

NOTES:
1. OPTIONAL STAINLESS STEEL SURFACE CARRIER RECOMMENDED.
2. INSTALLATION TO BE COMPLETED IN ACCORDANCE WITH MANUFACTURER'S SPECIFICATIONS.
3. DO NOT SCALE DRAWING.
4. THIS DRAWING IS INTENDED FOR USE BY ARCHITECTS, ENGINEERS, CONTRACTORS, CONSULTANTS AND DESIGN PROFESSIONALS FOR PLANNING PURPOSES ONLY. THIS DRAWING MAY NOT BE USED FOR CONSTRUCTION.
5. ALL INFORMATION CONTAINED HEREIN WAS CURRENT AT THE TIME OF DEVELOPMENT BUT MUST BE REVIEWED AND APPROVED BY THE PRODUCT MANUFACTURER TO BE CONSIDERED ACCURATE.
6. CONTRACTOR'S NOTE: FOR PRODUCT AND COMPANY INFORMATION VISIT www.CADdetails.com/info AND ENTER REFERENCE NUMBER 3354-6.10.

12440 SM
SHOWN W/ OPTIONAL TEMPLATE

L5.0_DETAILS
REVISION DATE 10/05/2023

01 DRINKING FOUNTAIN
NTS

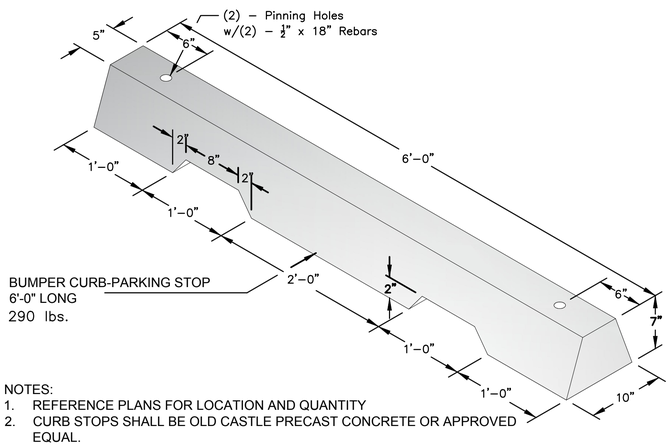

NOTES:
1. REFERENCE PLANS FOR LOCATION AND QUANTITY
2. CURB STOPS SHALL BE OLD CASTLE PRECAST CONCRETE OR APPROVED EQUAL.

03 PRECAST CONCRETE CURB STOPS
NTS

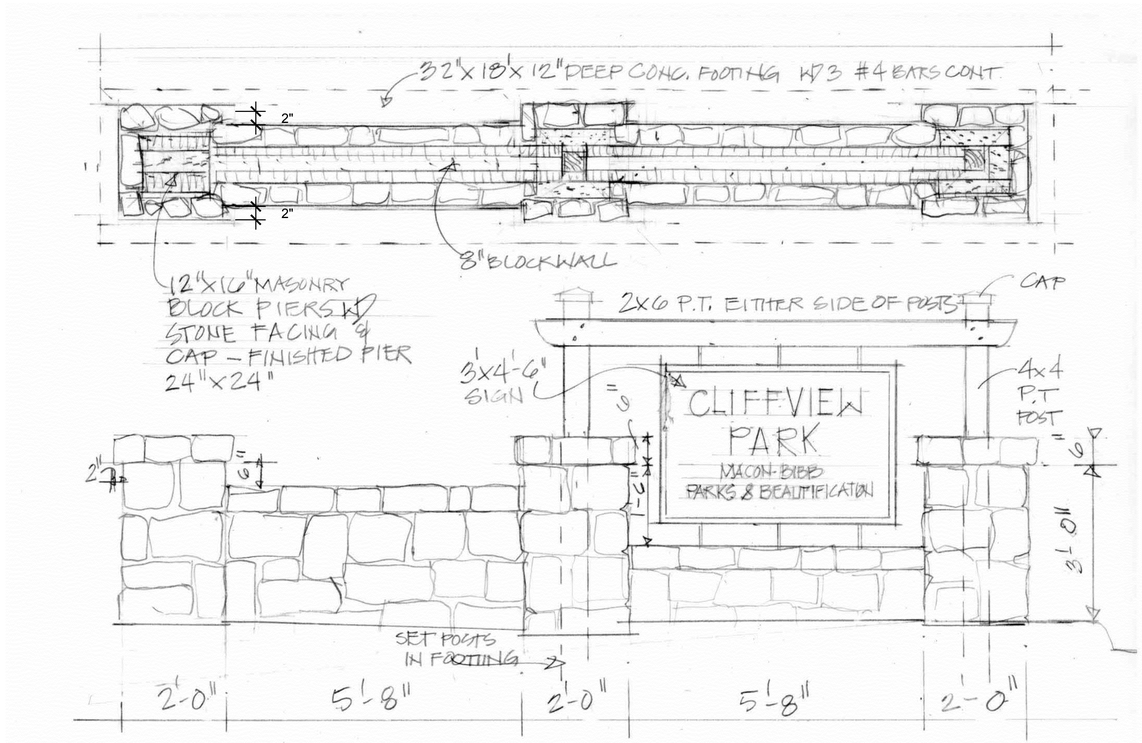

02 ENTRANCE WALL AND SIGN
NTS

OAK HAVEN STUDIO
986 COLE STREET
MACON, GA 31201
478.747.0250

CLIFFVIEW PARK
MACON, GA 31206

GEORGIA REGISTERED LANDSCAPE ARCHITECT No. LA001917 LAURIE FICKLING

KEY PLAN:

REVISIONS:

#	DATE	DESCRIPTION

DATE: SEPTEMBER 22, 2023

DETAILS

SHEET:

L5.2

STANDARD BOARDWALK

TYPICAL ID	SECTION TYPE	OVERALL WIDTH	SURFACE WIDTH	FOOTING MATERIAL			POST/SILLS/BACKWALLS				HEADER BEAM/STRINGERS/ DECK/CURB/RAILING SYSTEM			COMMENTS
				TYPE	DEPTH	WIDTH	POST HEIGHT	POST EMBEDMENT DEPTH	SPECIES	PRESERV. TYPE	DECK SIZE	SPECIES	PRESERV. TYPE	
SB1–1	A	6'–0"	5'–1"	FT2	X	X	VARIES	X	SYPNO2	P3	2X8	SYPNO2	P2	X

N/A WHEN NOT APPLICABLE

FOOTING MATERIAL

TYPE	MATERIAL	GRADATION	COMMENTS
FT1	CONCRETE	X	
FT2	AGGREGATE	X	
FT3	X	X	

PRESERVATIVE TREATMENT – (REFER TO AWPA USE CATEGORY SYSTEM)			
PRESERVATIVE TYPE	TREATMENT TYPE	USE CATEGORY	COMMENTS
P1	WB	UC4A	
P2	WB	UC3B	
P3	XX	UC4B	

SHEET 1 OF 3

TREATMENT TYPE

WB = WATERBORNE
OT = OIL–BORNE

USE CATEGORY

UC3B = ABOVE GROUND – EXPOSED
UC4A = GROUND CONTACT – GENERAL USE
UC4B = GROUND CONTACT – HEAVY DUTY

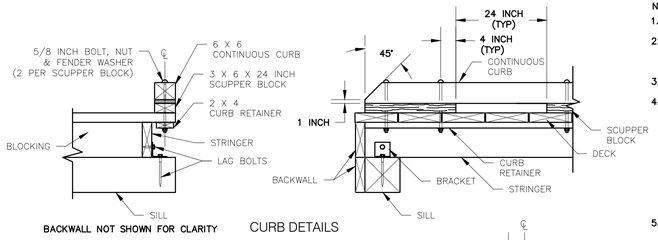

BACKWALL NOT SHOWN FOR CLARITY

CURB DETAILS

NOTES:

1. DESIGN LOAD: 100 PSF PEDESTRIAN LOAD.
2. ALL MATERIAL TYPE SHALL BE DOUGLAS FIR OR SOUTHERN PINE NO. 2 OR BETTER AS SPECIFIED IN THE ABOVE TABLE.
3. ALL FASTENERS SHALL BE GALVANIZED.
4. FASTENERS:
   DECKING: 60d 6 INCH RING SHANK NAILS OR DECK SCREWS 2 PER DECK STRINGER CONNECTION.

   STRINGERS & BACKWALLS: 40d 5 INCH LONG RING SHANK NAILS.

   ALERNATIVE FOR 7/8 BOLTS FOR HEADER BEAM IS BRACKET WITH AN ALLOWABLE LOAD OF 1100 LBS EACH SIDE.
5.

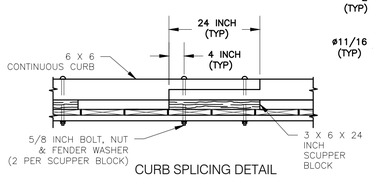

CURB SPLICING DETAIL

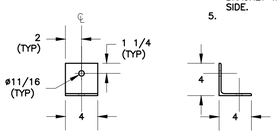

BRACKET DETAIL

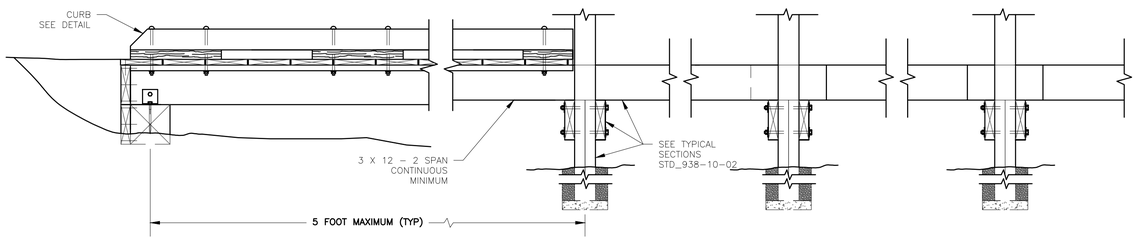

ABUTMENT PROFILE VIEW

TYPICAL STRINGER DETAIL

STRINGER LAP JOINT DETAIL

STRINGER BLOCKING DETAIL

PIER PROFILE VIEW
BLOCKING, CROSS BRACING, DECKING AND RAIL SYSTEM NOT SHOWN FOR CLARITY

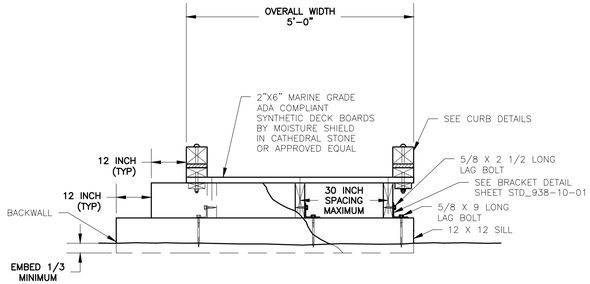

Ⓐ TYPICAL GROUND SECTION
BLOCKING REQUIRED AT EVERY SUPPORT NOT SHOWN FOR CLARITY

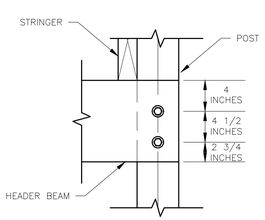

BOLT DETAIL

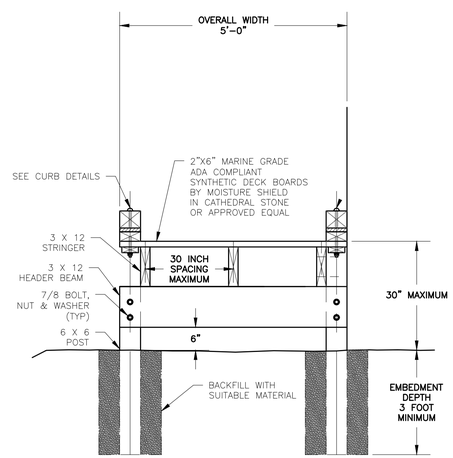

Ⓑ TYPICAL ELEVATED SECTION
LESS THAN 3 FEET WITH CURB
BLOCKING REQUIRED AT EVERY SUPPORT NOT SHOWN FOR CLARITY

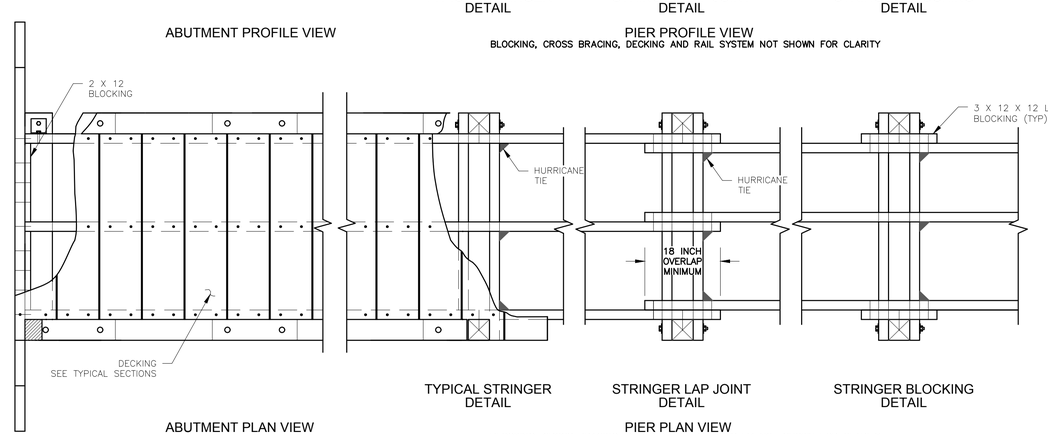

ABUTMENT PLAN VIEW

TYPICAL STRINGER DETAIL

STRINGER LAP JOINT DETAIL

STRINGER BLOCKING DETAIL

PIER PLAN VIEW
BLOCKING, CROSS BRACING, DECKING AND RAIL SYSTEM NOT SHOWN FOR CLARITY

01 STANDARD BOARDWALK
NOT TO SCALE

OAK HAVEN STUDIO
986 COLE STREET
MACON, GA 31201
478.747.0250

CLIFFVIEW PARK
MACON, GA 31206

GEORGIA REGISTERED No. LA001917 LANDSCAPE ARCHITECT LAURIE FICKLING

KEY PLAN:

REVISIONS:

#	DATE	DESCRIPTION

DATE: SEPTEMBER 22, 2023

STANDARD BOARDWALK DETAILS

SHEET:

L5.3

ELEVATED BOARDWALK

TYPICAL ID	SECTION TYPE	OVERALL WIDTH	SURFACE WIDTH	FOOTING MATERIAL			POST/SILLS/BACKWALLS				HEADER BEAM/STRINGERS/ DECK/CURB/RAILING SYSTEM			COMMENTS
				TYPE	DEPTH	WIDTH	POST HEIGHT	POST EMBEDMENT DEPTH	SPECIES	PRESERV. TYPE	DECK SIZE	SPECIES	PRESERV. TYPE	
SBW–1	B	6'–0"	5'–1"	F 1	X	X	VARIES	X	SYPNO2	P X	2X8	SYPNO2	P 3	X

N/A WHEN NOT APPLICABLE

FOOTING MATERIAL

TYPE	MATERIAL	GRADATION	COMMENTS
FT1	CONCRETE	X	
FT2	AGGREGATE	X	
FT3	X	X	

BRACKET DETAIL

PRESERVATIVE TREATMENT – (REFER TO AWPA USE CATEGORY SYSTEM)			
PRESERVATIVE TYPE	TREATMENT TYPE	USE CATEGORY	COMMENTS
P1	WB	UC4A	
P2	WB	UC3B	
P3	XX	UC4B	

TREATMENT TYPE
WB = WATERBORNE
OT = OIL–BORNE

USE CATEGORY
UC3B = ABOVE GROUND – EXPOSED
UC4A = GROUND CONTACT – GENERAL USE
UC4B = GROUND CONTACT – HEAVY DUTY

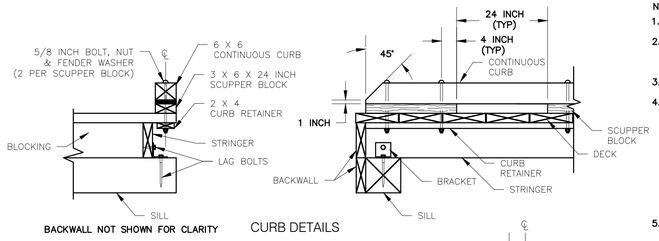

BACKWALL NOT SHOWN FOR CLARITY

CURB DETAILS

NOTES:

1. DESIGN LOAD: 100 PSF PEDESTRIAN LOAD.
2. ALL MATERIAL TYPE SHALL BE DOUGLAS FIR OR SOUTHERN PINE NO. 2 OR BETTER AS SPECIFIED IN THE ABOVE TABLE.
3. ALL FASTENERS SHALL BE GALVANIZED.
4. FASTENERS:
   DECKING: 60d 6 INCH RING SHANK NAILS OR DECK SCREWS 2 PER DECK STRINGER CONNECTION.
   RAILING: NO. 10 X 4 INCH LONG WOOD SCREWS 2 PER RAIL POST CONNECTION.
   STRINGERS & BACKWALLS: 40d 5 INCH LONG RING SHANK NAILS.
5. ALERNATIVE FOR 7/8 BOLTS FOR HEADER BEAM IS BRACKET WITH AN ALLOWABLE LOAD OF 1100 LBS EACH SIDE.

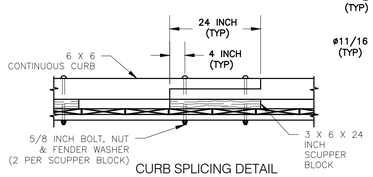

CURB SPLICING DETAIL

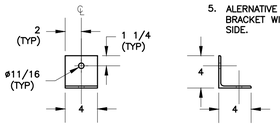

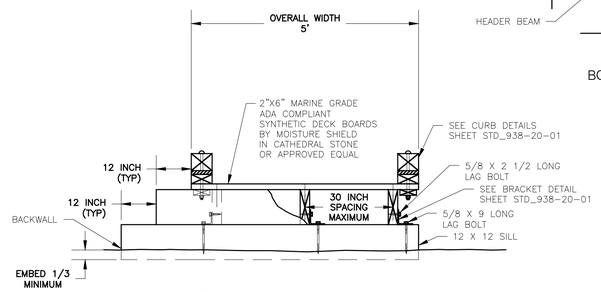

Ⓐ TYPICAL GROUND SECTION
BLOCKING REQUIRED AT EVERY SUPPORT NOT SHOWN FOR CLARITY

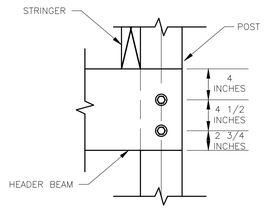

BOLT DETAIL

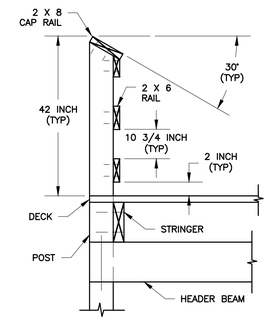

RAIL SYSTEM DETAIL

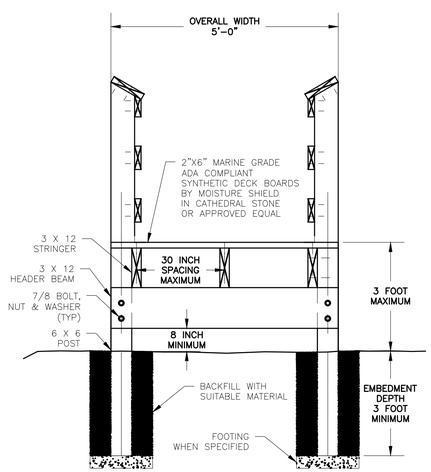

Ⓑ TYPICAL ELEVATED SECTION
LESS THAN 3 FEET WITH CURB
BLOCKING REQUIRED AT EVERY SUPPORT NOT SHOWN FOR CLARITY

Ⓒ TYPICAL ELEVATED SECTION
LESS THAN 3 FEET WITH CURB
BLOCKING REQUIRED AT EVERY SUPPORT NOT SHOWN FOR CLARITY

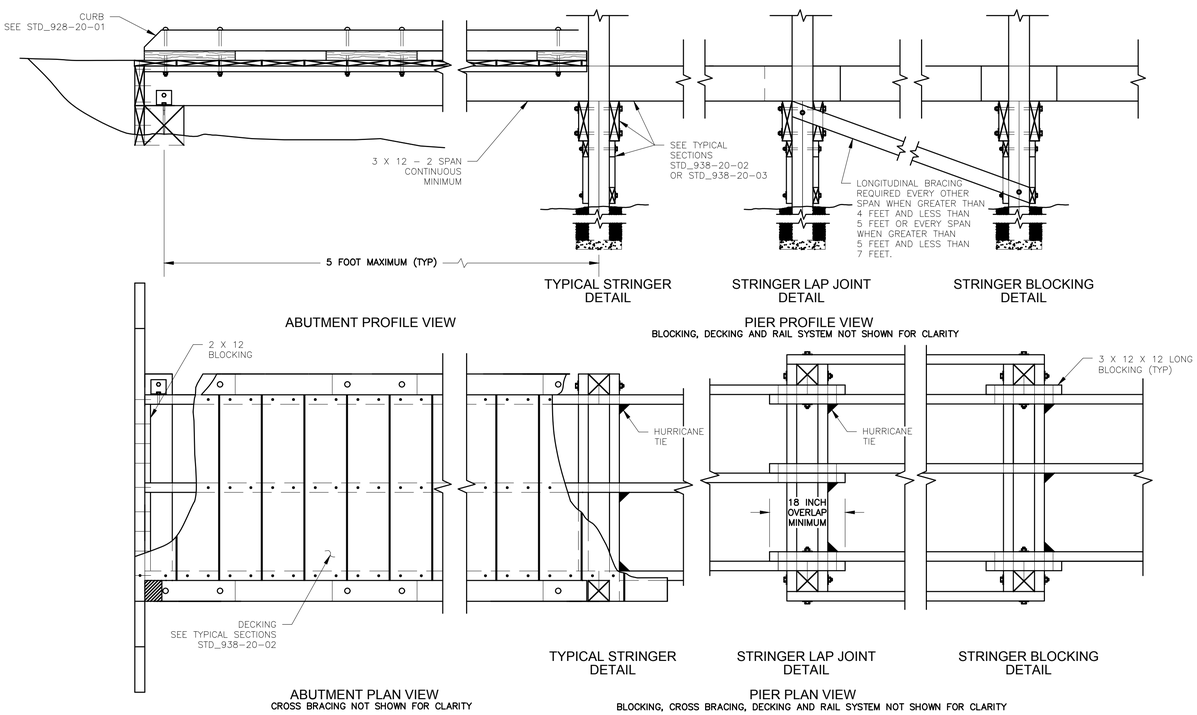

ABUTMENT PROFILE VIEW

TYPICAL STRINGER DETAIL

STRINGER LAP JOINT DETAIL

STRINGER BLOCKING DETAIL

PIER PROFILE VIEW
BLOCKING, DECKING AND RAIL SYSTEM NOT SHOWN FOR CLARITY

ABUTMENT PLAN VIEW
CROSS BRACING NOT SHOWN FOR CLARITY

TYPICAL STRINGER DETAIL

STRINGER LAP JOINT DETAIL

STRINGER BLOCKING DETAIL

PIER PLAN VIEW
BLOCKING, CROSS BRACING, DECKING AND RAIL SYSTEM NOT SHOWN FOR CLARITY

01 *ELEVATED BOARDWALK*
NOT TO SCALE

OAK HAVEN STUDIO
986 COLE STREET
MACON, GA 31201
478.747.0250

CLIFFVIEW PARK

MACON, GA 31206

GEORGIA REGISTERED LANDSCAPE ARCHITECT No. LA001917 LAURIE FICKLING

KEY PLAN:

REVISIONS:

#	DATE	DESCRIPTION

DATE: SEPTEMBER 22, 2023

ELEVATED BOARDWALK DETAILS

SHEET:

L5.4

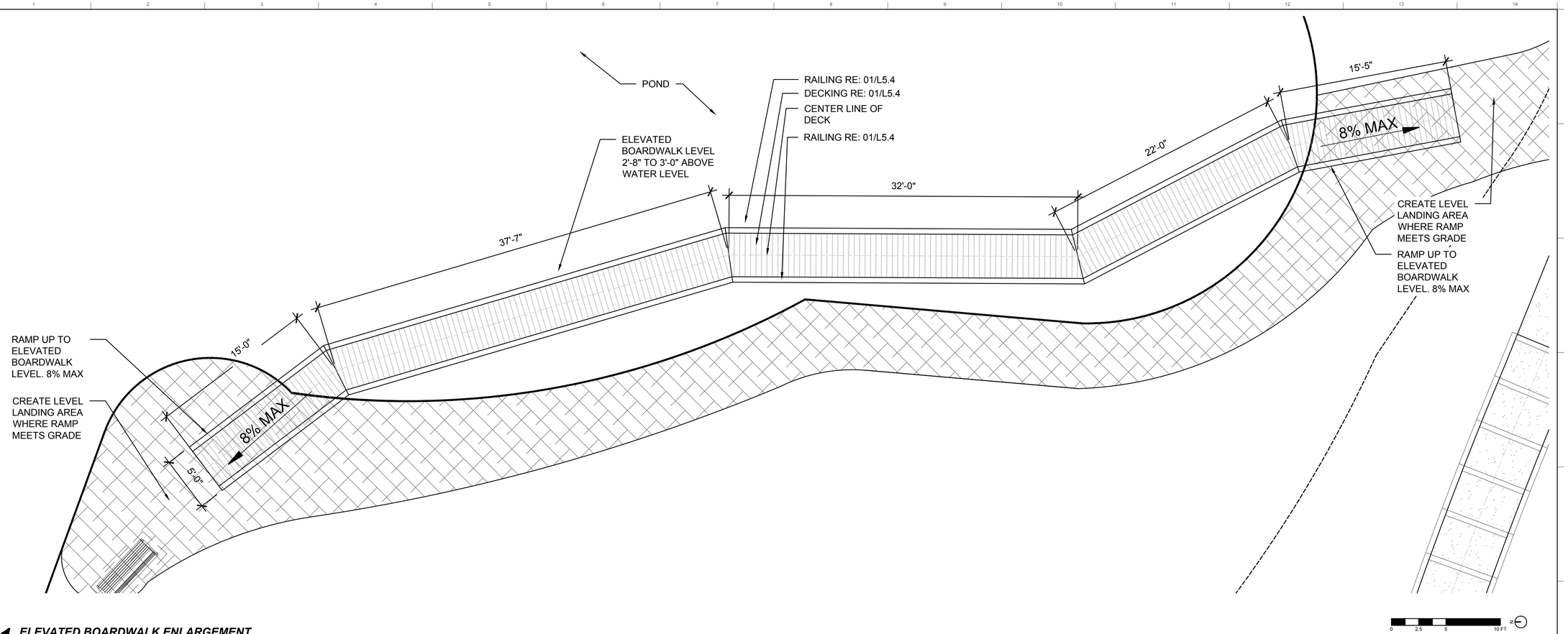

01 ELEVATED BOARDWALK ENLARGEMENT

SCALE: 1"=5'-0"

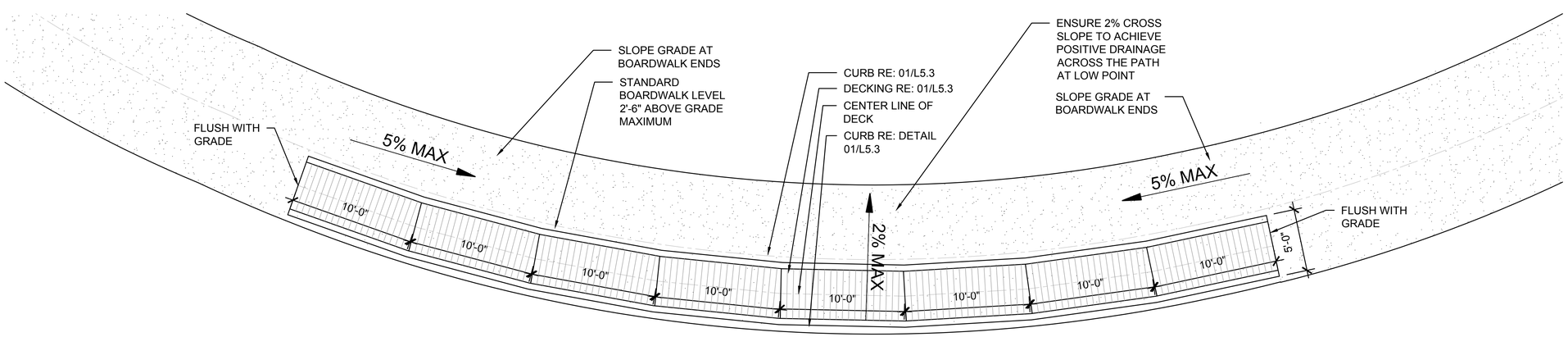

02 STANDARD BOARDWALK ENLARGEMENT

SCALE: 1"=5'-0"

OAK HAVEN STUDIO
986 COLE STREET
MACON, GA 31201
478.747.0250

CLIFFVIEW PARK

MACON, GA 31206

GEORGIA REGISTERED No. LA001917 LANDSCAPE ARCHITECT LAURIE FICKLING

KEY PLAN:

REVISIONS:

#	DATE	DESCRIPTION

DATE: SEPTEMBER 22, 2023

BOARDWALK ENLARGEMENT PLANS

SHEET:

L5.5

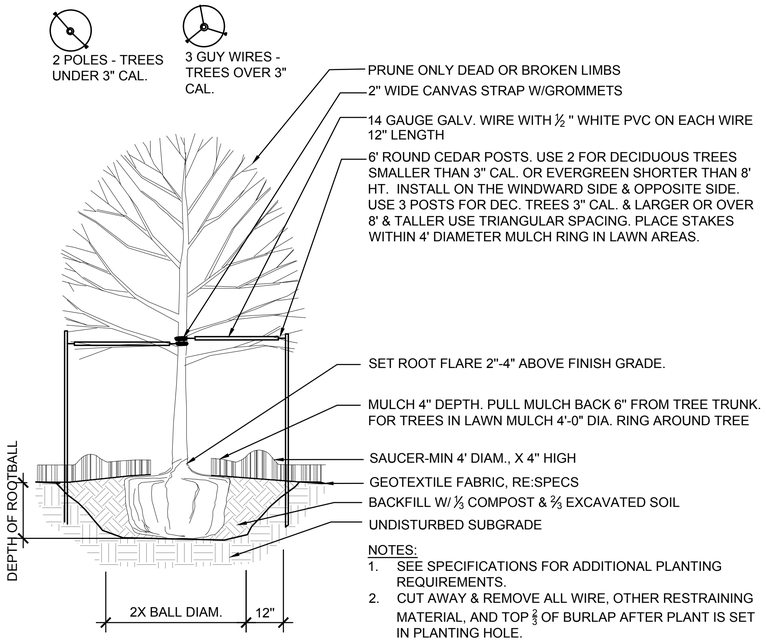

NOTES:
1. SEE SPECIFICATIONS FOR ADDITIONAL PLANTING REQUIREMENTS.
2. CUT AWAY & REMOVE ALL WIRE, OTHER RESTRAINING MATERIAL, AND TOP ⅔ OF BURLAP AFTER PLANT IS SET IN PLANTING HOLE.
3. SCARIFY PIT WALLS.
4. PLUMB AND ORIENT PLANTS FOR BEST APPEARANCE.

01 *TREE PLANTING - DECIDUOUS*
1"=1'-0"

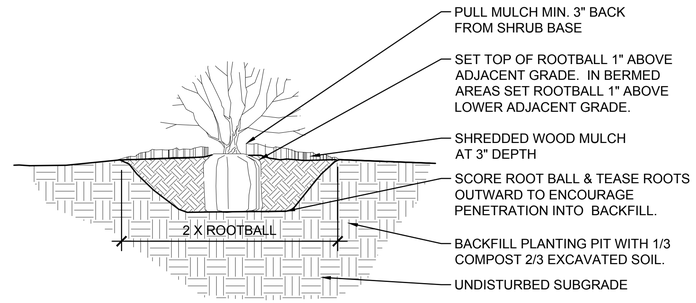

NOTES:
1. SEE SPECS FOR ADDITIONAL PLANTING REQUIREMENTS.
2. PLUMB AND ORIENT PLANTS FOR BEST APPEARANCE.
3. REMOVE ALL TWINE FROM ROOT BALL, AND FOLD BURLAP BACK 2/3.
4. REMOVE PLASTIC BURLAP ENTIRELY. FOR CONTAINER SHRUBS, CAREFULLY REMOVE CONTAINER AND SCORE ROOT BALL.
5. SEE PLANTING PLAN FOR MORE INFORMATION.

02 *PLANTING - SURHB*
1"=1'-0"

OAK HAVEN STUDIO
986 COLE STREET
MACON, GA 31201
478.747.0250

CLIFFVIEW PARK
MACON, GA 31206

GEORGIA REGISTERED LANDSCAPE ARCHITECT No. LA001917 LAURIE FICKLING

KEY PLAN:

REVISIONS:

#	DATE	DESCRIPTION

DATE: SEPTEMBER 22, 2023

PLANTING DETAILS

SHEET:

L5.6

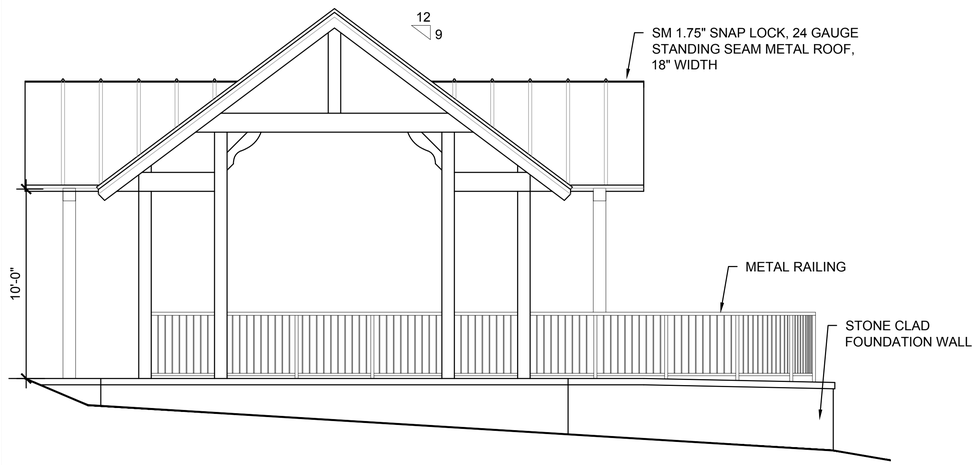

01 END ELEVATION
SCALE: 1/4" = 1'-0"

NOTE: SEE STRUCTURAL DRAWINGS FOR TRUSS DETAILS

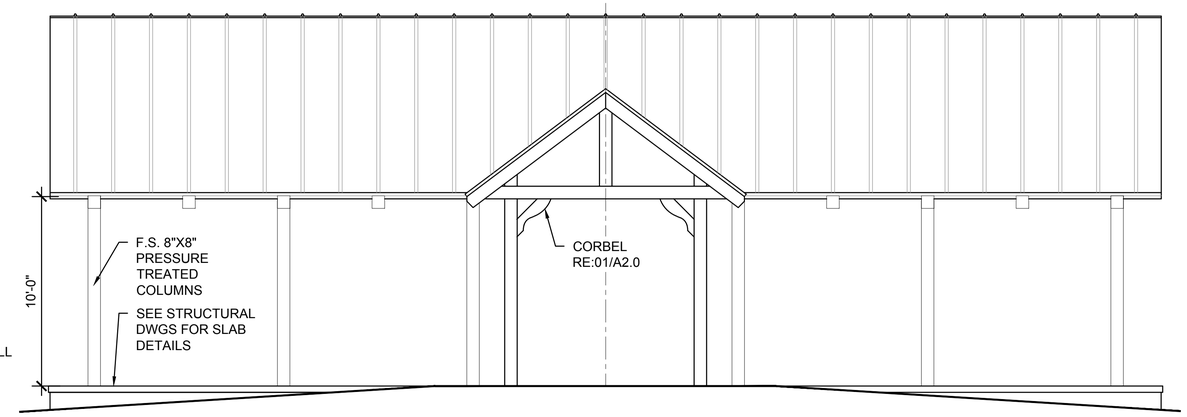

02 FRONT ELEVATION
SCALE: 1/4" = 1'-0"

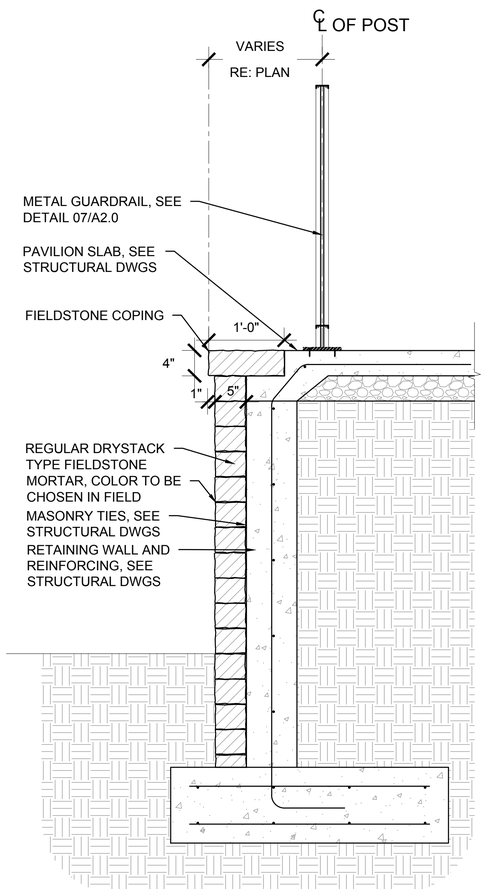

03 SLAB EDGE DETAIL
SCALE: 1" = 1'-0"

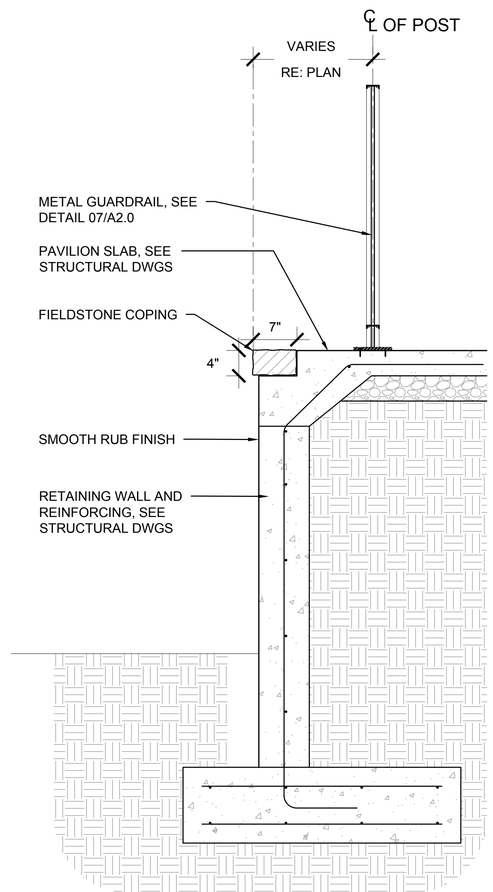

04 SLAB EDGE - DEDUCT OPTION
SCALE: 1" = 1'-0"

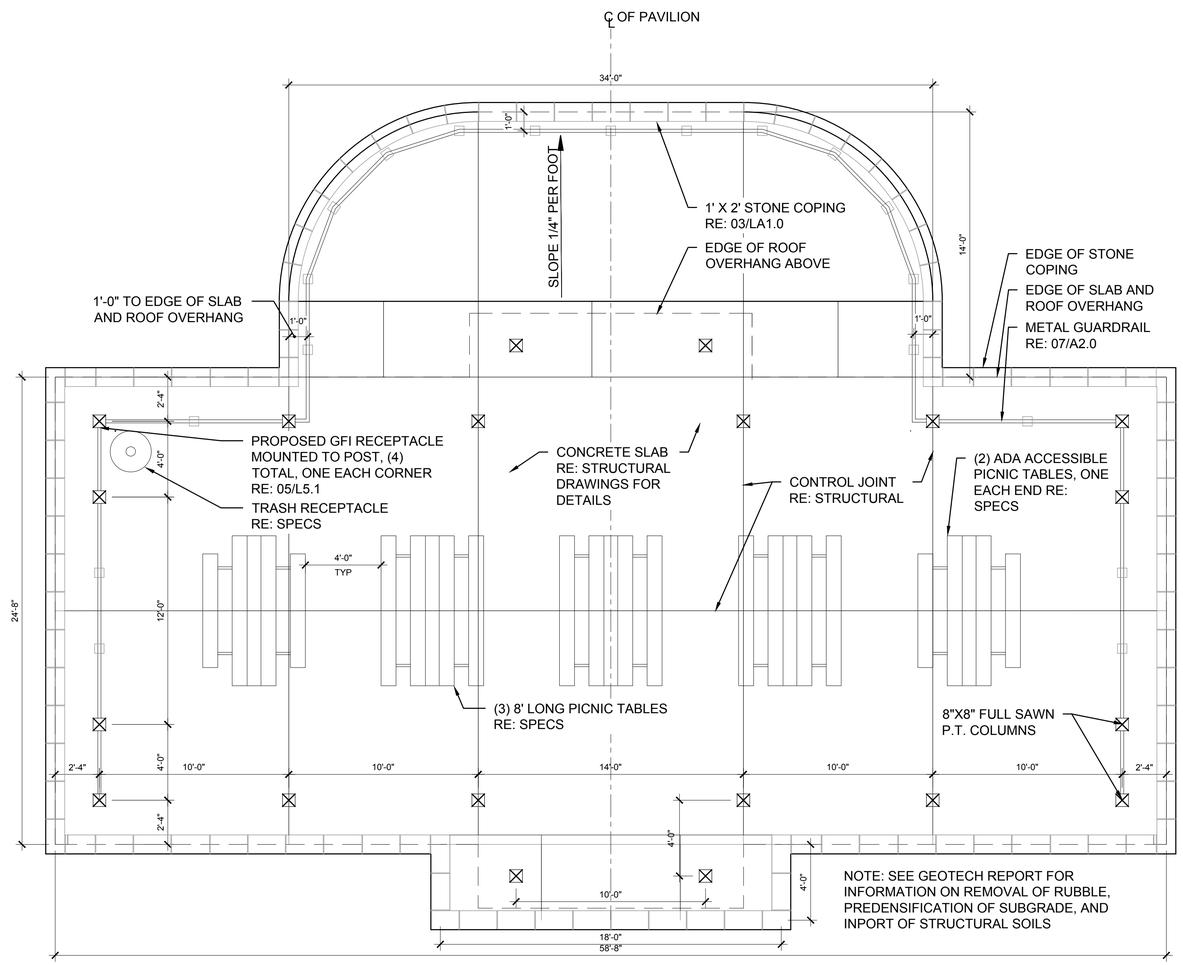

NOTE: SEE GEOTECH REPORT FOR INFORMATION ON REMOVAL OF RUBBLE, PREDENSIFICATION OF SUBGRADE, AND INPORT OF STRUCTURAL SOILS

05 PAVILION PLAN
SCALE: 1/4" = 1'-0"

OAK HAVEN STUDIO
986 COLE STREET
MACON, GA 31201
478.747.0250

CLIFFVIEW PARK
MACON, GA 31206

STATE OF GEORGIA
SHANNON FICKLING
CERTIFICATE NO. RA027598
REGISTERED ARCHITECT

KEY PLAN:

REVISIONS:

#	DATE	DESCRIPTION

DATE: SEPTEMBER 22, 2023

FLOOR PLAN, ELEVATIONS, AND DETAILS

SHEET:

A1.0

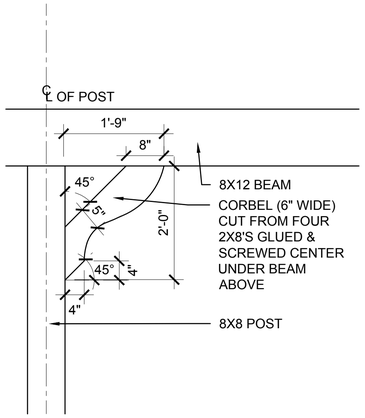

01 CORBEL DETAIL
SCALE: 3/4" = 1'-0"

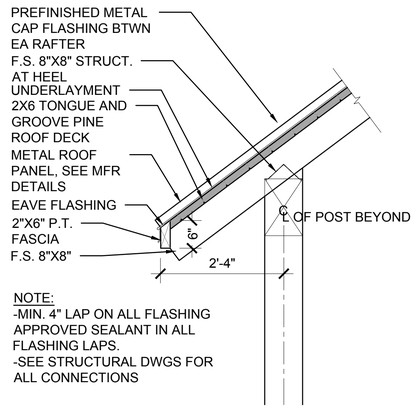

NOTE:
-MIN. 4" LAP ON ALL FLASHING APPROVED SEALANT IN ALL FLASHING LAPS.
-SEE STRUCTURAL DWGS FOR ALL CONNECTIONS

02 EVE DETAIL
SCALE: 3/4" = 1'-0"

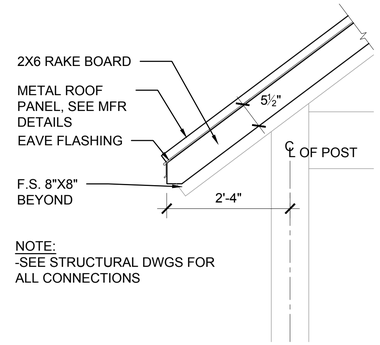

NOTE:
-SEE STRUCTURAL DWGS FOR ALL CONNECTIONS

03 RAKE DETAIL - ELEVATION VIEW
SCALE: 3/4" = 1'-0"

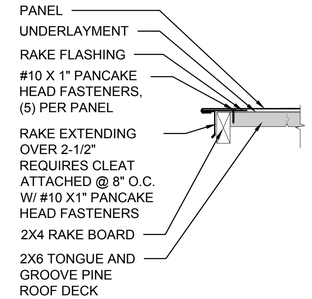

NOTE: MIN. 4" LAP ON ALL FLASHING APPROVED SEALANT IN ALL FLASHING LAPS.

04 RAKE DETAIL - SECTION AT RIDGE
SCALE: 1 1/2" = 1'-0"

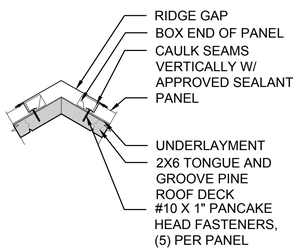

NOTE: MIN. 4" LAP ON ALL FLASHING APPROVED SEALANT IN ALL FLASHING LAPS. HIP Z CLOSURES TO BE FASTENED @4" O.C.

05 HIP/RIDGE DETAIL
SCALE: 1 1/2" = 1'-0"

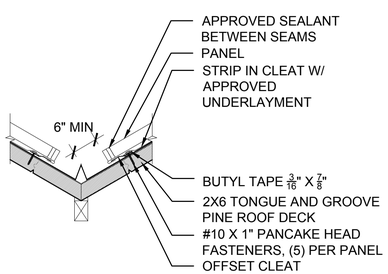

NOTE: LAPS IN VALLEY ARE 12" MIN APPROVED SEALANT IN ALL LAPS IN VALLEY. TWO ROWS OF SEALANT BETWEEN VALLEY LAPS, 4" UP FROM LAP

06 VALLEY DETAIL
SCALE: 1 1/2" = 1'-0"

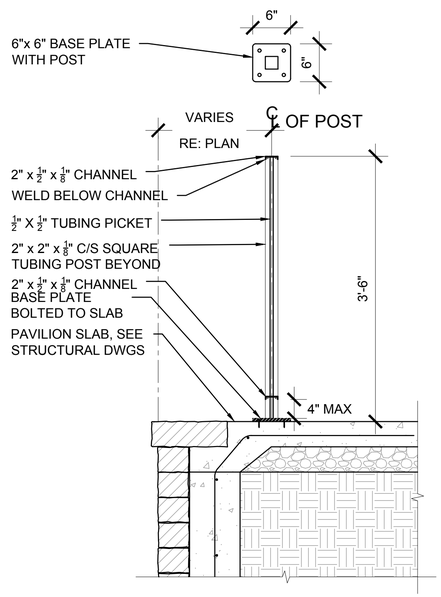

07 GUARDRAIL DETAIL
SCALE: 1" = 1'-0"

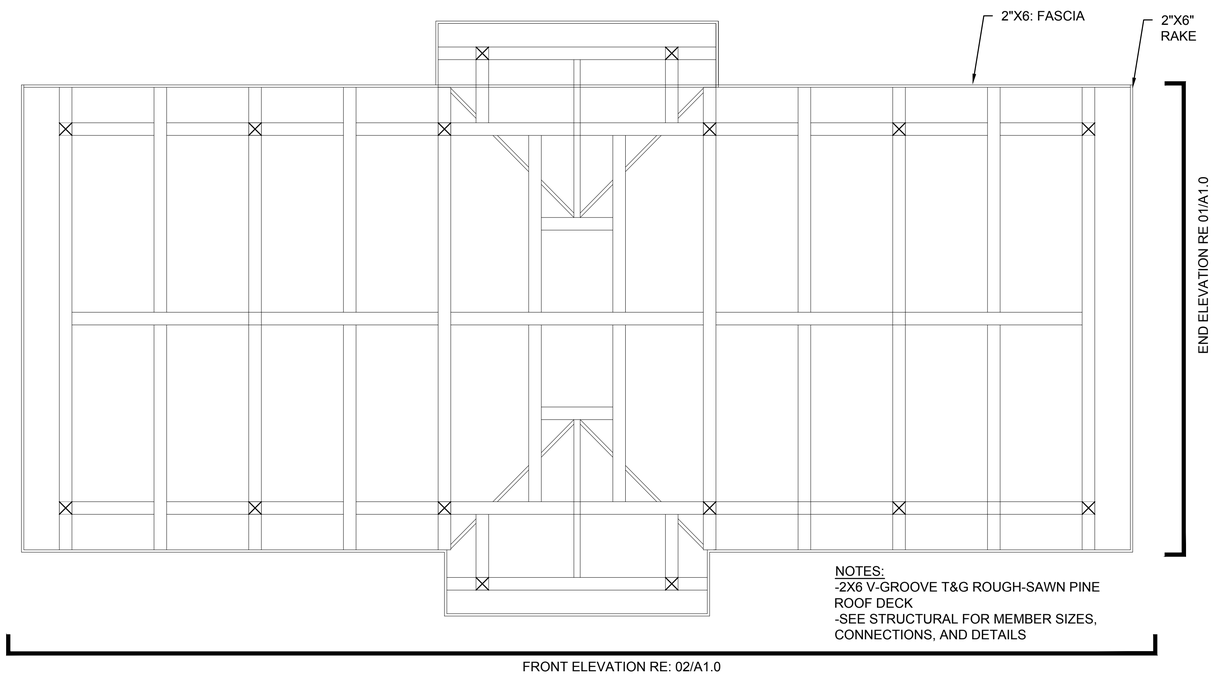

NOTES:
-2X6 V-GROOVE T&G ROUGH-SAWN PINE ROOF DECK
-SEE STRUCTURAL FOR MEMBER SIZES, CONNECTIONS, AND DETAILS

08 FRAMING PLAN
SCALE: 1/4" = 1'-0"

OAK HAVEN STUDIO
986 COLE STREET
MACON, GA 31201
478.747.0250

CLIFFVIEW PARK
MACON, GA 31206

STATE OF GEORGIA
SHANNON FICKLING
CERTIFICATE NO. RA027388
REGISTERED ARCHITECT

KEY PLAN:

REVISIONS:

#	DATE	DESCRIPTION

DATE: SEPTEMBER 22, 2023

FRAMING PLAN AND DETAILS

SHEET:

A2.0

GENERAL NOTES

1. DESIGN LOADS
   DEAD LOADS
   A. ROOF (TOP CHORD DL).....10 PSF
   LIVE LOADS
   A. ROOF (TOP CHORD LL_r; REDUCED AS PERMITTED PER ASCE 7–16).....20 PSF
   B. SLAB ON GRADE.....100 PSF

2. DESIGN WIND LOADS
   A. BASIC WIND SPEED (V_{ult}) ..... 107 MPH
   B. NOMINAL WIND SPEED (V_{asd}) ..... 83 MPH
   C. RISK CATEGORY II
   D. WIND EXPOSURE CATEGORY "C"
   E. INTERNAL PRESSURE COEFFICIENT .....$"GC_{pi}" = \pm 0.00$
   F. COMPONENTS & CLADDING DESIGN WIND PRESSURES:

	EFFECTIVE AREA	ZONE 3		ZONE 2		ZONE 1	
PAVILION ROOF	$\leq a^2$	+43.1	−43.1	+33.4	−32.4	+21.8	−15.3
	$a^2 < X \leq 4a^2$	+33.4	−32.4	+33.4	−32.4	+21.8	−15.3
	$> 4a^2$	+21.8	−21.6	+21.8	−21.6	+21.8	−15.3

ALL PRESSURES ARE INTENDED TO BE APPLIED AND INTERPRETED IN STRICT ACCORDANCE WITH ASCE 7–16. FOR THE PURPOSES OF APPLYING THESE LOADS IN ACCORDANCE WITH COMPONENTS & CLADDING FIGURES IN ASCE 7–16, a=3 FT.

3. SEISMIC DESIGN
   A. SEISMIC IMPORTANCE FACTOR ..... I = 1.00
   B. MAPPED SPECTRAL RESPONSE ACCELERATIONS.....
   $S_s = 0.181$
   $S_1 = 0.077$
   C. SITE CLASS "D" ASSUMED
   D. SPECTRAL RESPONSE COEFFICIENTS ..... $S_{DS} = 0.193$
   $S_{D1} = 0.123$
   E. SEISMIC DESIGN CATEGORY "B"
   F. BASIC LATERAL FORCE RESISTING SYSTEM:
   CANTILEVER COLUMN SYSTEMS DETAILS TO CONFORM TO THE REQUIREMENTS FOR TIMBER
   G. DESIGN BASE SHEAR ..... 3 KIPS
   H. SEISMIC RESPONSE COEFFICIENT ..... $C_s = 0.129$
   I. RESPONSE MODIFICATION FACTOR ..... R = 1.5
   J. ANALYSIS PROCEDURE USED: EQUIVALENT LATERAL FORCE PROCEDURE FOR SEISMIC DESIGN OF BUILDINGS

4. SNOW LOADS
   A. GROUND SNOW LOAD .....$"P_g" = 5$ PSF

5. CODES
   A. INTERNATIONAL BUILDING CODE, 2018 ED. WITH 2023 GEORGIA AMENDMENTS.
   B. REINFORCED CONCRETE: ACI 318–14.
   C. ALL STEEL WORK SHALL COMPLY WITH APPLICABLE STANDARDS OF THE AMERICAN INSTITUTE OF STEEL CONSTRUCTION, INCLUDING THE SPECIFICATION FOR THE DESIGN, FABRICATION AND ERECTION OF STRUCTURAL STEEL FOR BUILDINGS, LATEST EDITION AND THE AMERICAN WELDING SOCIETY'S STRUCTURAL WELDING CODE, AWS D1.1–LATEST EDITION.

6. PROVIDE TEMPORARY BRACING OF STRUCTURAL FRAMING UNTIL ALL PERMANENT BRACING, SHEAR WALLS, MOMENT CONNECTIONS, AND FLOOR AND ROOF DIAPHRAGMS ARE COMPLETELY INSTALLED. THE STRUCTURAL ELEMENTS ARE UNSTABLE UNTIL THE STRUCTURE IS COMPLETED IN ACCORDANCE WITH THE PLANS.

7. SHOP DRAWINGS GENERAL NOTES: THE PLANS, SECTIONS, AND DETAILS PROVIDED AS PART OF THE CONTRACT DOCUMENTS SHALL NOT BE USED IN A REPRODUCIBLE FORM AS PART OF THE SHOP DRAWINGS. ALL FABRICATORS & SUPPLIERS SHALL ANTICIPATE THAT REVISIONS TO SUBMITTALS MAY BE REQUIRED. THIS INCLUDES MODIFICATIONS TO DETAILS THAT ARE CHANGED FOR COORDINATION PURPOSES. NO ADDITIONAL FEES ARE PERMITTED FOR REVISING SUBMITTALS FOR WORK DESCRIBED IN THE CONTRACT DOCUMENTS.

INSPECTIONS

1. INDEPENDENT STRUCTURAL TESTS AND INSPECTIONS SHALL COMPLY WITH THE REQUIREMENTS OF THE 2018 INTERNATIONAL BUILDING CODE WITH GEORGIA STATE AMENDMENTS. THE INSPECTOR SHALL BE RESPONSIBLE FOR INDICATING COMPLIANCE WITH THE APPROVED STRUCTURAL PLANS AND SHALL SUBMIT PROGRESS REPORTS AND INSPECTION REPORTS TO THE ARCHITECT OF RECORD.

2. SATISFY MINIMUM INSPECTION AND QUALITY CONTROL REQUIREMENTS OF THE 2018 INTERNATIONAL BUILDING CODE WITH GEORGIA STATE AMENDMENTS.

REINFORCED CONCRETE GENERAL NOTES

1. ALL CONCRETE WORK SHALL CONFORM TO ACI 301, "SPECIFICATIONS FOR STRUCTURAL CONCRETE FOR BUILDINGS". DESIGN IS BASED ON ACI 318, "BUILDING CODE REQUIREMENTS FOR STRUCTURAL CONCRETE."

2. CONCRETE SHALL BE NORMAL WEIGHT (150 PCF) AND SHALL DEVELOP A MINIMUM COMPRESSIVE STRENGTH OF 3000 PSI AT 28 DAYS.

3. SUBMIT CONCRETE MIX DESIGNS FOR REVIEW, IN ACCORDANCE WITH ACI 301 & 318 TO THE ARCHITECT AND TESTING AGENCY.

4. THE PROPOSED MATERIALS AND MIX DESIGN SHALL BE FULLY DOCUMENTED AND REVIEWED. RESPONSIBILITY FOR OBTAINING THE REQUIRED DESIGN STRENGTH IS THE CONTRACTOR'S.

5. USE OF CALCIUM CHLORIDE, CHLORIDE IONS, OR OTHER SALTS IN CONCRETE IS NOT PERMITTED.

6. THE AIR CONTENT AT THE POINT OF PLACEMENT SHALL BE PER ACI 318 TABLE 19.3.3.1 FOR MODERATE EXPOSURE (F1). HARD TROWELED SLABS OR SLABS ON GRADE THAT WILL RECEIVED TOPPINGS SHALL NOT RECEIVE AIR ENTRAINMENT UNLESS PERMITTED BY TOPPING MANUFACTURER.

7. THE TESTING AGENCY SHALL SAMPLE AND TEST EACH 100 CU. YARDS OR FRACTION THEREOF OF EACH CLASS OF CONCRETE PLACED EACH DAY. SAMPLE CONCRETE IN ACCORDANCE WITH ASTM C172. PERFORM THE FOLLOWING TESTS IN ACCORDANCE WITH THE INDICATED STANDARD:

   SLUMP: ASTM C143

   AIR CONTENT: ASTM C231 (NORMAL WEIGHT CONCRETE)
   ASTM C173 (LIGHT WEIGHT CONCRETE)

   COMPRESSIVE STRENGTH: ASTM C39, WITH ONE CYLINDER AT 7 DAYS, 2 CYLINDERS AT 28 DAYS, AND ONE SPECIMEN HELD IN RESERVE.

   CONCRETE TEMPERATURE: ASTM C1064

   UNIT WEIGHT: ASTM C567

8. MOIST CURE CONCRETE WITH MOISTURE PROTECTIVE COVER FOR A MINIMUM OF 7 DAYS.

9. HORIZONTAL CONSTRUCTION JOINTS ARE PERMITTED ONLY WHERE INDICATED. THE LOCATION OF VERTICAL CONSTRUCTION JOINTS SHALL BE APPROVED BY THE ARCHITECT. CONSTRUCTION JOINTS SHALL BE THOROUGHLY ROUGHENED BY MECHANICAL MEANS, CLEANED, AND CAULKED.

10. REINFORCING STEEL SHALL CONFORM TO ASTM A615, GRADE 60, UNLESS NOTED OTHERWISE.

11. WELDED WIRE REINFORCING (W.W.R.) SHALL BE PLAIN WIRE CONFORMING TO ASTM A106-4 AND SHALL BE PROVIDED IN FLAT SHEETS. LAP MESH AT LEAST ONE MESH SPACING AT SPLICES.

12. TIE ALL REINFORCING STEEL AND EMBEDMENTS SECURELY IN PLACE PRIOR TO PLACING CONCRETE. PROVIDE SUFFICIENT SUPPORTS TO MAINTAIN THE POSITION OF REINFORCEMENT WITHIN SPECIFIED TOLERANCES DURING ALL CONSTRUCTION ACTIVITIES. "STICKING" DOWELS INTO WET CONCRETE IS NOT PERMITTED.

13. REINFORCING STEEL SHALL HAVE THE FOLLOWING CONCRETE COVER UNLESS NOTED OTHERWISE:

    CONCRETE CAST AGAINST EARTH (NOT FORMED): 3"

    FORMED CONCRETE EXPOSED TO EARTH OR WEATHER
    #6 BARS THROUGH #12 BARS 2"
    #5 BARS AND SMALLER 1 1/2"

    CONCRETE NOT EXPOSED TO EARTH OR WEATHER
    SLABS AND WALLS 1"

14. DO NOT PLACE PIPES EXCEEDING ONE–THIRD THE SLAB OR WALL THICKNESS WITHIN THE SLAB OR WALL UNLESS SPECIFICALLY SHOWN AND DETAILED ON STRUCTURAL DRAWINGS.

15. DO NOT WELD OR TACK WELD REINFORCING STEEL UNLESS APPROVED OR DIRECTED BY THE STRUCTURAL ENGINEER.

16. EXTERIOR SLABS SHALL DRAIN FREELY WITH A MAXIMUM VARIATION FROM THE INDICATED PLANE OF 1/4" PER 1'–0".

SOIL PARAMETERS

1. SOIL PARAMETERS
   A. FOOTINGS ARE DESIGNED FOR A MINIMUM ALLOWABLE SOIL BEARING PRESSURE OF 2000 POUNDS PER SQUARE FOOT. SPECIFIC SITE PREPARATION GUIDELINES ARE REQUIRED TO ACHIEVE THIS SOIL BEARING PRESSURE.

1. IF SITE CONDITIONS DIFFER FROM THOSE INDICATED, THE DESIGN PROFESSIONAL SHALL BE NOTIFIED IMMEDIATELY.

2. REFERENCE LANDSCAPE ARCHITECT'S GRADING AND DRAINAGE PLANS, DETAILS AND SPECIFICATIONS.

3. ALL FOUNDATION WORK SHALL BE DONE 'IN THE DRY'. SEE REFERENCED SOILS REPORT FOR PRE–CONSTRUCTION DRAINAGE REQUIREMENTS.

4. IT IS THE RESPONSIBILITY OF THE CONTRACTOR TO VERIFY ALL EXISTING SITE CONDITIONS THROUGH AN INDEPENDENT SITE INVESTIGATION PRIOR TO COMMENCING WORK.

6. UNDERCUTTING AND REMOVAL OF MIXED RUBBLE MATERIAL WITHIN THE PAVILION FOOTPRINT WILL BE REQUIRED. THE SITE SHOULD BE PREDENSIFIED AND PROOFROLLED. PLACE STRUCTURAL FILL IN LOOSE LIFTS OF 8" MAX. EACH LIFT SHOULD BE COMPACTED TO A MINIMUM DENSITY OF 95% OF THE MAXIMUM DRY DENSITY. STRUCTURAL FILL SHOULD EXTEND HORIZONTALLY OUTSIDE THE FOOTPRINT OF THE PERIMETER FOOTINGS A DISTANCE EQUAL TO THE FILL DEPTH.

7. SEE ALSO: TEST PIT EXPLORATION DATED AUGUEST 3, 2023 AND ALL ASSOCIATED ADDENDA:
   PRESTON GEOTECHNICAL CONSULTANTS
   4725 IVEY DRIVE
   MACON, GEORGIA 31206
   (PGC JOB NO. 19361)

TRUSS FRAME GENERAL NOTES

1. TIMBER PROPERTIES WERE ASSUMED TO BE FULL SAWN, SOUTHERN PINE NO. 2 OR BETTER (Fb=850 PSI, E=1,200,000 PSI)

2. OTHER FRAMING NOTED AS STANDARD DRESSED (S4S) IS ASSUMED TO BE SOUTHERN PINE NO. 2 OR BETTER (Fb=750 PSI, E=1,400,000 PSI)

3. PRESERVATIVE TREATED LUMBER AND FIRE–RETARDANT LUMBER MAY AFFECT THE CORROSION RESISTANCE OF METAL FASTENERS AND CONNECTOR:

   3.1. DIFFERENT CHEMICAL TREATMENTS HAVE DIFFERENT CORROSION EFFECTS AND WILL VARY BY MANUFACTURER

   3.2. THE CONTRACTOR IS RESPONSIBLE FOR OBTAINING ALL PERTINENT INFORMATION ABOUT THE TREATED WOOD PRODUCTS USED. THIS SHOULD INCLUDE THE AWPA USE CATEGORY DESIGNATION, WOOD SPECIES GROUP, WOOD TREATMENT CHEMICAL, CHEMICAL RETENTION, FASTENER CORROSION RESISTANCE REQUIREMENTS, RECOMMENDED FASTENERS FROM TREATED LUMBER SUPPLIER, AND CODE EVALUATION REPORTS.

   3.3. THE CONTRACTOR SHALL REVIEW ALL METAL CONNECTOR AND FASTENERS SHOWN HEREIN FOR COMPATIBILITY WITH THE PRESERVATIVE TREATED LUMBER USED. CONTACT PROJECT ARCHITECT IMMEDIATELY IF SUBSTITUTIONS ARE REQUIRED.

   3.4. AT A MINIMUM, ALL METAL CONNECTORS AND FASTENERS IN CONTACT WITH TREATED LUMBER SHALL BE HOT–DIPPED GALVANIZED OR STAINLESS STEEL. ALL FASTENERS USED WITH METAL CONNECTORS SHALL BE COMPATIBLE WITH THE METAL CONNECTOR HARDWARE.

4. STEEL GUSSET PLATES SHALL CONFORM TO ASTM A36 (36 KSI YIELD STRENGTH)

5. PROVIDE BLACK PAINT ON PLATES AND BOLT HEADS. COORDINATE WITH ARCH. FOR SPECIFIC FINISH REQUIREMENTS.

6. TRUSS MEMBERS SHALL BE CUT ACCURATELY TO ALLOW CONTACT BETWEEN MEMBERS AT ALL JOINTS.

7. 3/8" STEEL GUSSET PLATES SHALL BE APPLIED TO EACH SIDE OF ALL JOINTS, WITH 5/8"ø THRU BOLTS IN ALL HOLES AS SHOWN ON GUSSET PATE DETAILS.

8. ALL BOLTS TO BE INSTALLED ON CENTERLINE OF THE MEMBER UNLESS NOTED OTHERWISE.

9. ALL BOLTS TO BE GRADE 5 OR BETTER WITH WASHERS UNDER THE HEAD AND NUT. DEFORM EXPOSED THREADS AFTER ALL BOLTS ARE INSTALLED IN A JOINT.

CONCRETE SLAB ON GRADE JOINTING GENERAL NOTES & DETAILS

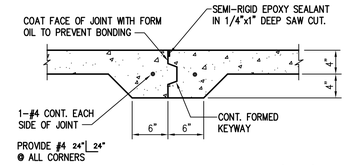

TYPICAL CONSTRUCTION JOINT (CJ) DETAIL

SCALE: 1"=1'–0"

THIS DETAIL MAY BE USED AT THE CONTRACTOR'S DISCRETION WHERE A CONSTRUCTION JOINT IN THE SLAB IS REQUIRED. ALL CONSTRUCTION JOINTS AND SAWCUT FLOOR JOINTS SHALL BE LOCATED ON THE SUBMITTAL DESCRIBED AT RIGHT.

ISOLATION JOINTS ARE REQUIRED BETWEEN THE SLAB AND ADJOINING BUILDING ELEMENTS SUCH AS WALLS & COLUMNS. ISOLATION JOINTS SHALL BE FORMED BY INSERTING THE SPECIFIED PREFORMED EXPANSION JOINT MATERIAL (P.E.J.) BETWEEN THE SLAB AND THE ADJOINING ELEMENT. WHERE REQUIRED BY THE ARCHITECT, THE TOP OF THE P.E.J. SHALL BE REMOVED AND CAULKED WITH AN ELASTOMERIC SEALANT.

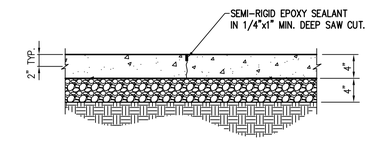

SAWCUT FLOOR JOINT (FJ) DETAIL

SCALE: 1"=1'–0"

THE CONTRACTOR SHALL SUBMIT A FLOOR JOINT LAYOUT & PLACING SEQUENCE FOR REVIEW A MINIMUM OF 3 WEEKS PRIOR TO SLAB POUR. JOINTING LAYOUT AND SEQUENCE SHALL CONFORM TO ACI 302. THE SLAB MAY BE POURED MONOLITHICALLY (IN LIEU OF KEYED JOINTS) PROVIDED THAT THE JOINTS ARE CUT AS SOON AS THE SLAB CAN SUPPORT AN OPERATOR AND EQUIPMENT (BUT NO MORE THAN 4 HOURS AFTER THE POUR). SAW CUT JOINTS SHOULD BE A MIN. OF 1" DEEP FOR A 4" THICK SLAB AND 1 1/2" DEEP FOR A 6" THICK SLAB AND SHALL BE LOCATED AT 15'–0" MAX. ON CENTER. JOINTS SHOULD BE LOCATED SUCH THAT THE SIDE RATIO OF EACH AREA DOES NOT EXCEED 3:2. HOWEVER A RATIO OF 1:1 IS PREFERRED. PROVIDE EITHER A SAW CUT JOINT OR 2–#4'S x 6'–0" AT ALL INTERIOR CORNERS.

STRUCTURAL DESIGN BY
PI–TECH, INC.

GEORGIA REGISTERED No. PE000983 STRUCTURAL ENGINEER MATTHEW N. ELLIS

8.22.2023
Pi–Tech, Inc. COA#PEF003000
COA Expiration: 6.30.2024

PI–TECH, INC.
115 FOREST HILL RD. – MACON, GEORGIA (478)743–5600

CLIFFVIEW PARK PAVILION
MACON, GA
FOR
OAK HAVEN STUDIO
MACON, GA

REVISIONS
DRAWN BY: RWA
CHECKED BY: MNE
DATE: AUGUST 22, 2023
SHEET NO. S0
SHEET 1 OF 9

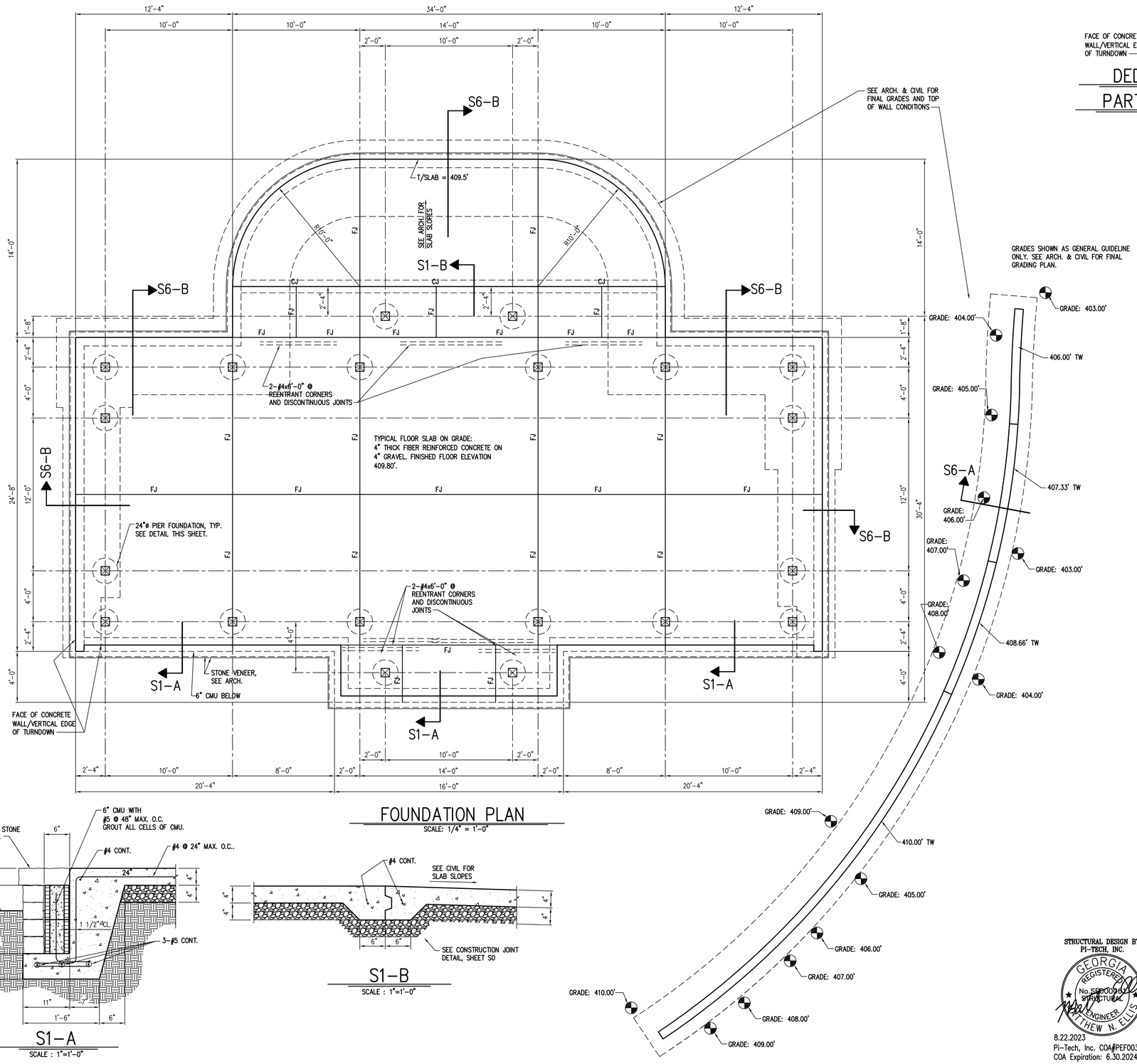

FOUNDATION PLAN

SCALE: 1/4" = 1'-0"

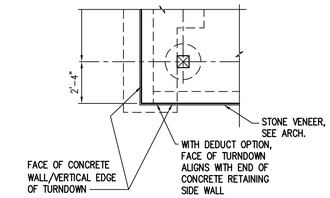

DEDUCT OPTION
PARTIAL PLAN VIEW

NO SCALE

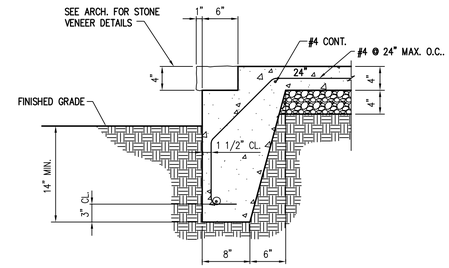

S1-A – DEDUCT OPTION

SCALE : 1"=1'-0"

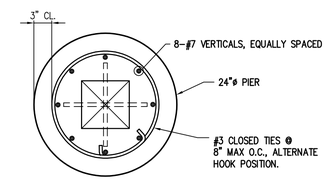

TYPICAL 24"ø PIER

SCALE: 1"=1'-0"

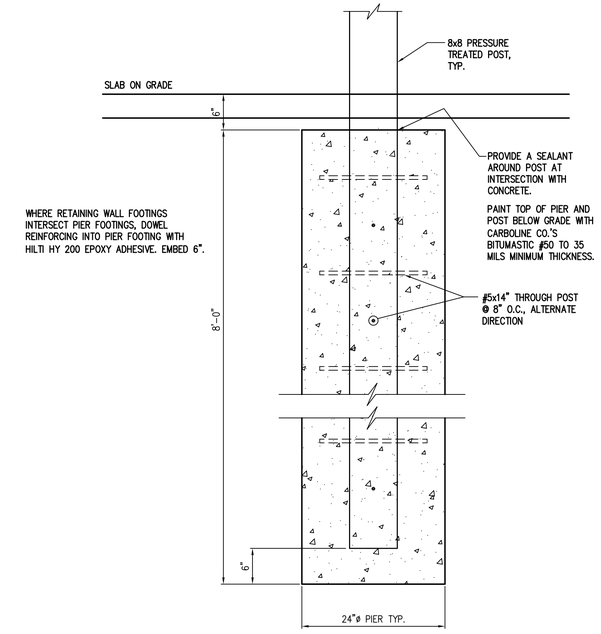

TYPICAL 24"ø PIER FOUNDATION

SCALE: 1"=1'-0"

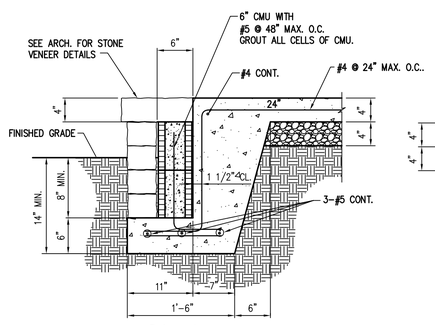

S1-A

SCALE : 1"=1'-0"

S1-B

SCALE : 1"=1'-0"

STRUCTURAL DESIGN BY PI-TECH, INC.

GEORGIA REGISTERED No. SE0000961 STRUCTURAL ENGINEER MATTHEW N. ELLIS

8.22.2023
Pi-Tech, Inc. COA#PEF003000
COA Expiration: 6.30.2024

PI-TECH, INC. 115 FOREST HILL RD. – MACON, GEORGIA (478)743-5600	REVISIONS
	DRAWN BY: RWA
CLIFFVIEW PARK PAVILION MACON, GA FOR OAK HAVEN STUDIO MACON, GA	CHECKED BY: MNE
	DATE: AUGUST 22, 2023
	SHEET NO. S1 SHEET 2 OF 9

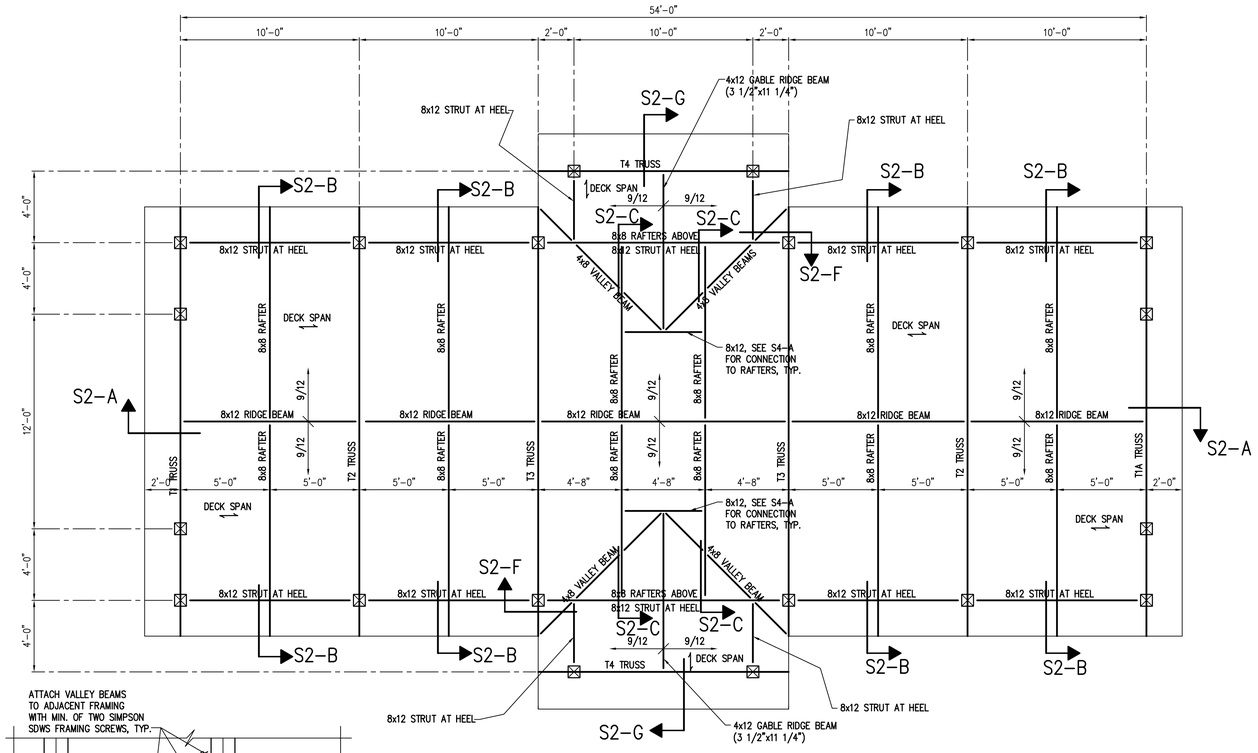

ROOF FRAMING PLAN

SCALE: 1" = 1'-0"

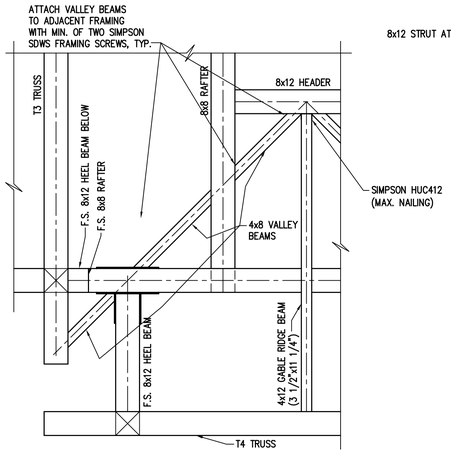

PARTIAL PLAN VIEW OF GABLE

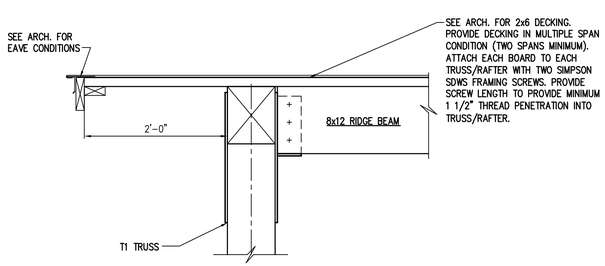

S2-A

SCALE: 1" = 1'-0"

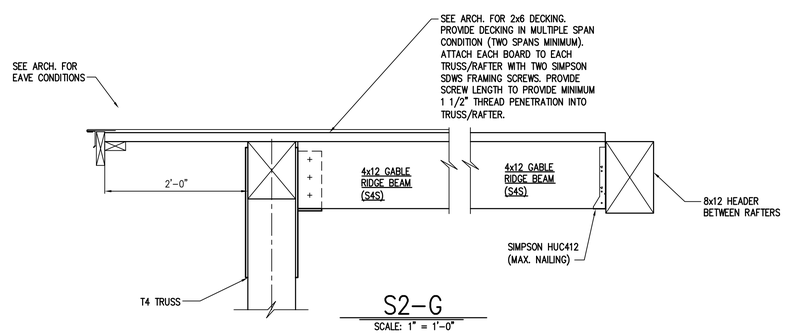

S2-G

SCALE: 1" = 1'-0"

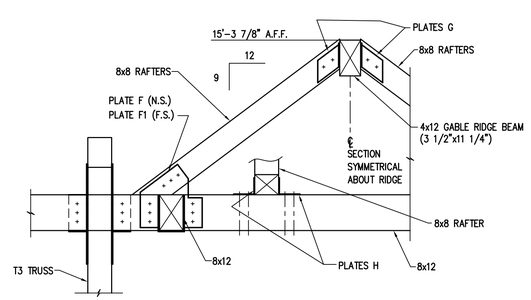

S2-F

SCALE: 1/2" = 1'-0"

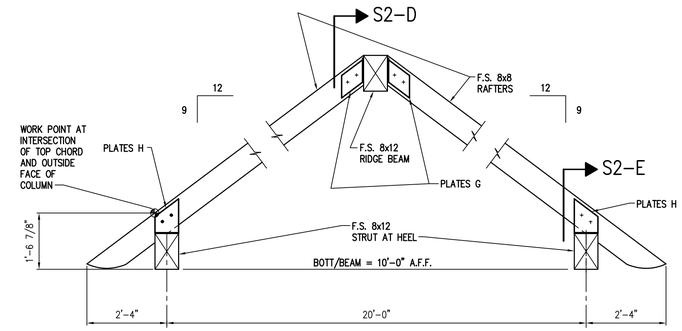

S2-B

SCALE: 1/2" = 1'-0"

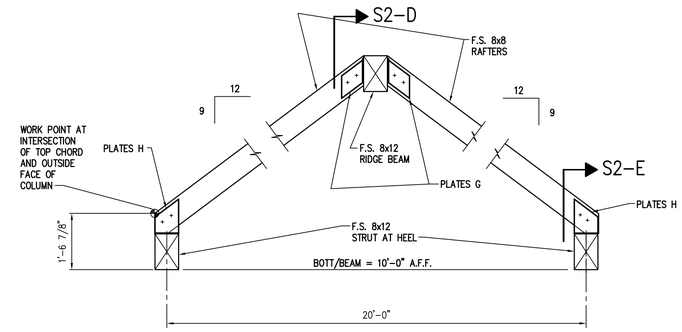

S2-C

SCALE: 1/2" = 1'-0"

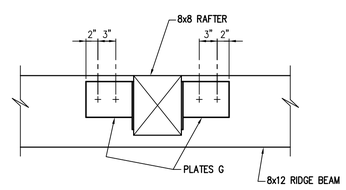

TYPICAL RAFTER TO RIDGE BEAM CONNECTION

S2-D

SCALE: 1" = 1'-0"

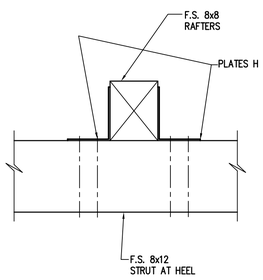

S2-E

SCALE: 1" = 1'-0"

STRUCTURAL DESIGN BY PI-TECH, INC.

GEORGIA REGISTERED No. PE0000962 STRUCTURAL ENGINEER MATTHEW N. ELLIS

8.22.2023
Pi-Tech, Inc. COA#PEF003000
COA Expiration: 6.30.2024

PI-TECH, INC.

115 FOREST HILL RD. – MACON, GEORGIA (478)743-5600

CLIFFVIEW PARK PAVILION

MACON, GA
FOR
OAK HAVEN STUDIO
MACON, GA

REVISIONS
DRAWN BY: RWA
CHECKED BY: MNE
DATE: AUGUST 22, 2023
SHEET NO. S2
SHEET 3 OF 9

ALL GUSSET PLATES TO BE FABRICATED FROM 3/8" ASTM A36 PLATE
ALL HOLES IN GUSSET PLATES TO BE 11/16"ø

NOTE: FOR PLATE NOTATION,
N.S. IS THE NEAR SIDE OF FRAME
F.S. IS THE FAR SIDE OF FRAME

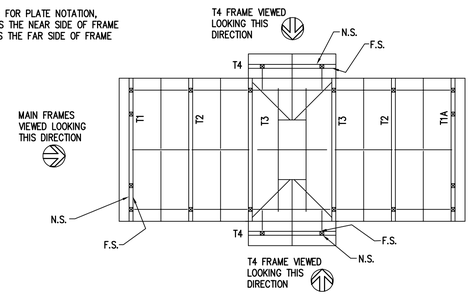

KEY PLAN

(SEE SHEET S2 FOR FRAME LABELS)

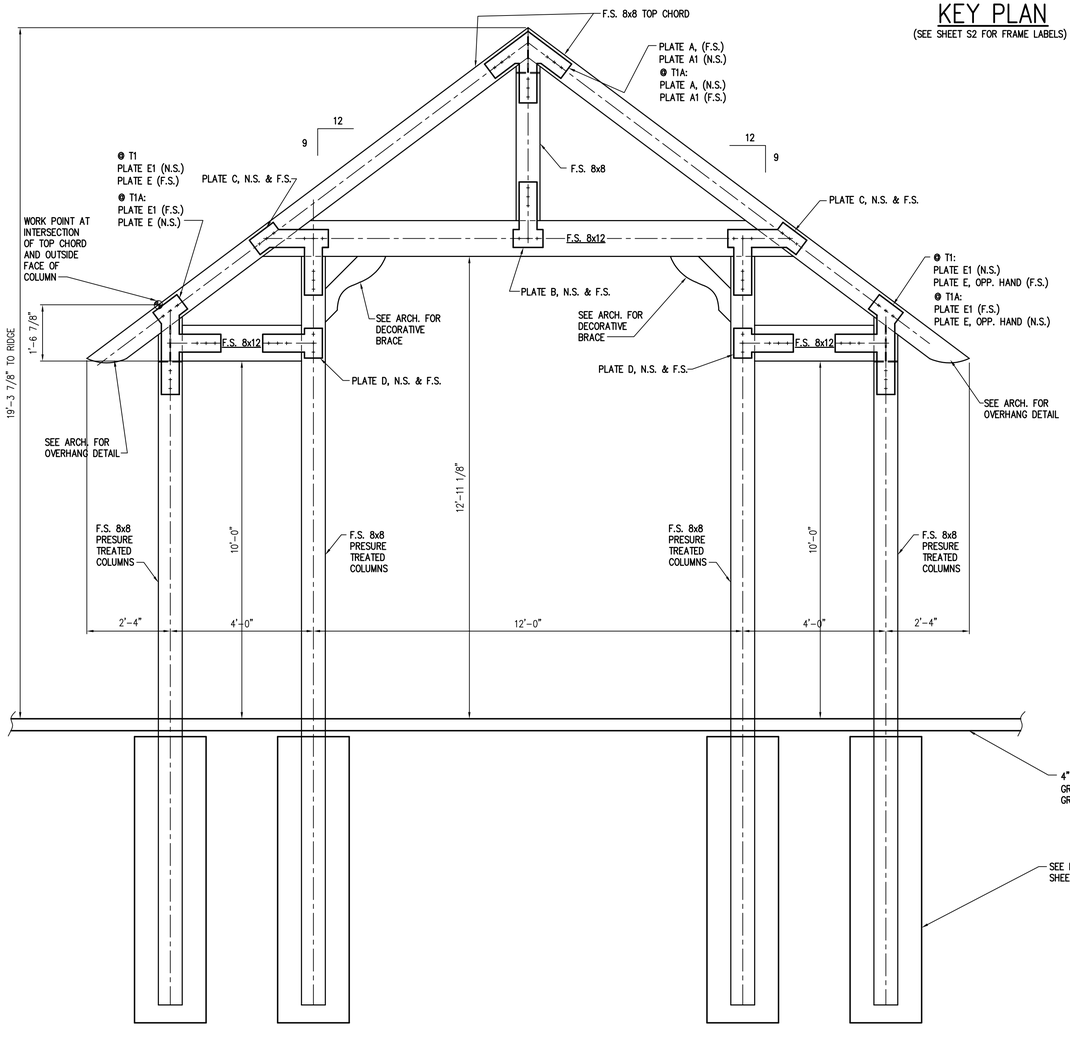

T1 & T1A TRUSS

SCALE: 1/2"=1'-0"

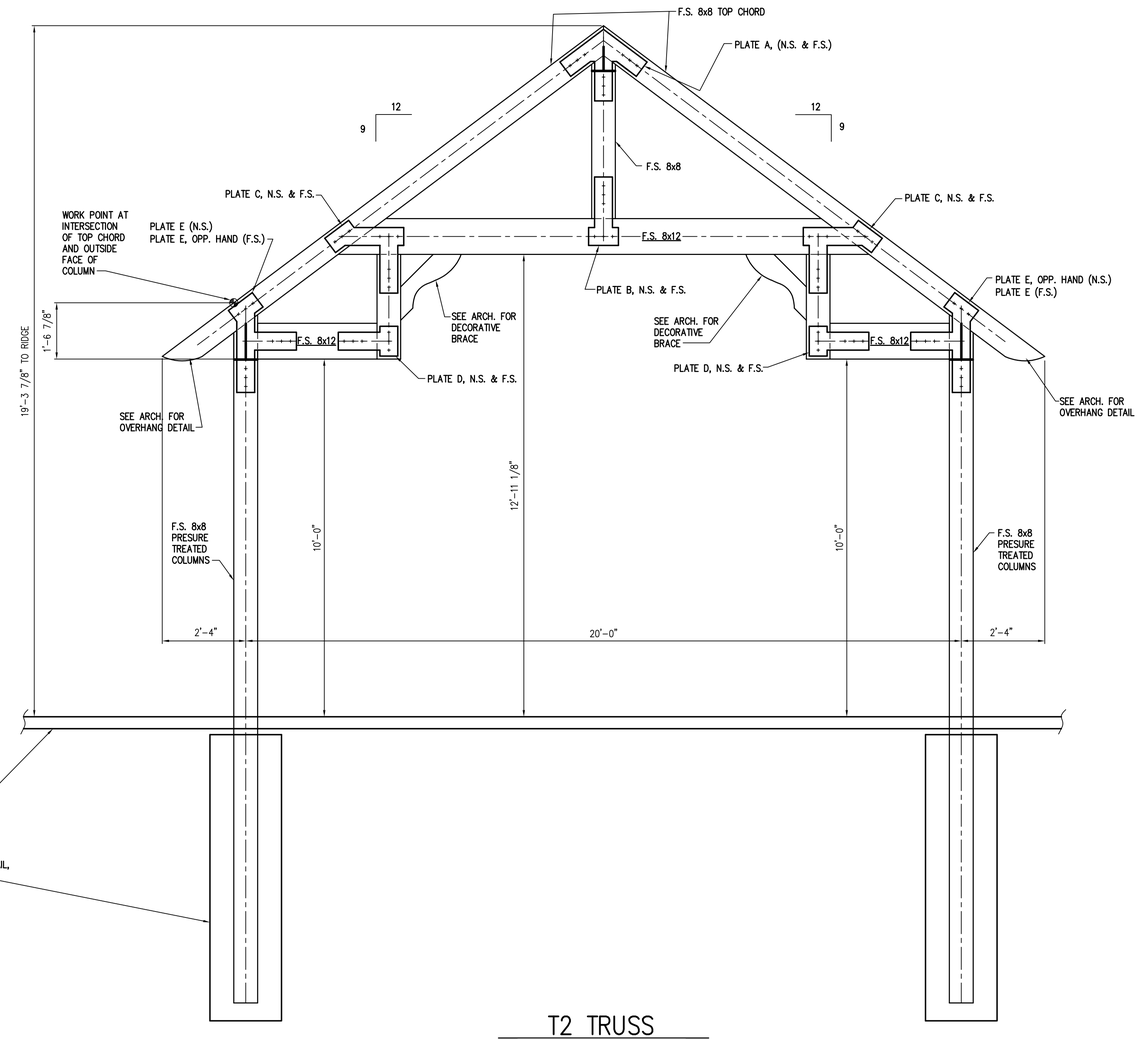

T2 TRUSS

SCALE: 1/2" = 1'-0"

STRUCTURAL DESIGN BY
PI-TECH, INC.

GEORGIA REGISTERED No. SE0000062 STRUCTURAL ENGINEER MATTHEW N. ELLIS

8.22.2023
Pi-Tech, Inc. COA#PEF003000
COA Expiration: 6.30.2024

PI-TECH, INC.
115 FOREST HILL RD. - MACON, GEORGIA (478)743-5600

CLIFFVIEW PARK PAVILION

MACON, GA
FOR
OAK HAVEN STUDIO
MACON, GA

REVISIONS

DRAWN BY: RWA
CHECKED BY: MNE
DATE: AUGUST 22, 2023
SHEET NO. S3
SHEET 4 OF 9

ALL GUSSET PLATES TO BE FABRICATED FROM 3/8" ASTM A36 PLATE
ALL HOLES IN GUSSET PLATES TO BE 11/16"ø

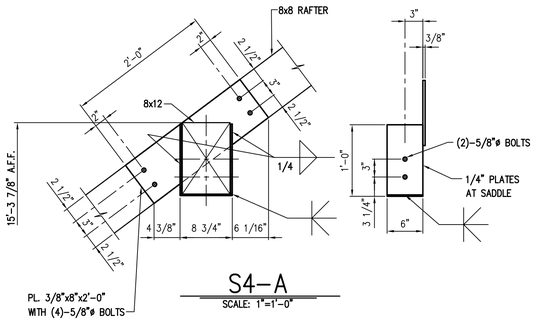

S4-A
SCALE: 1"=1'-0"

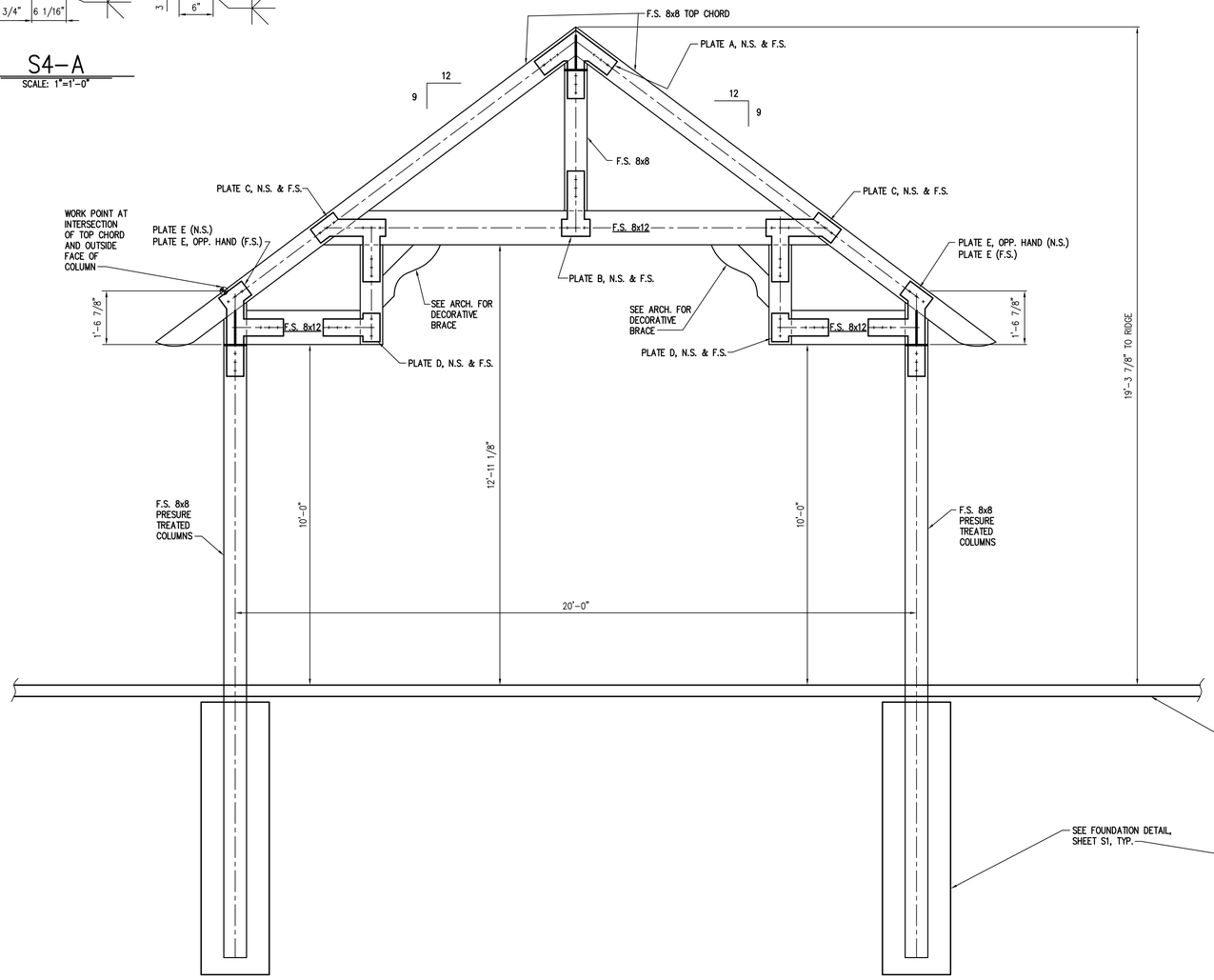

T3 TRUSS
SCALE: 1/2"=1'-0"

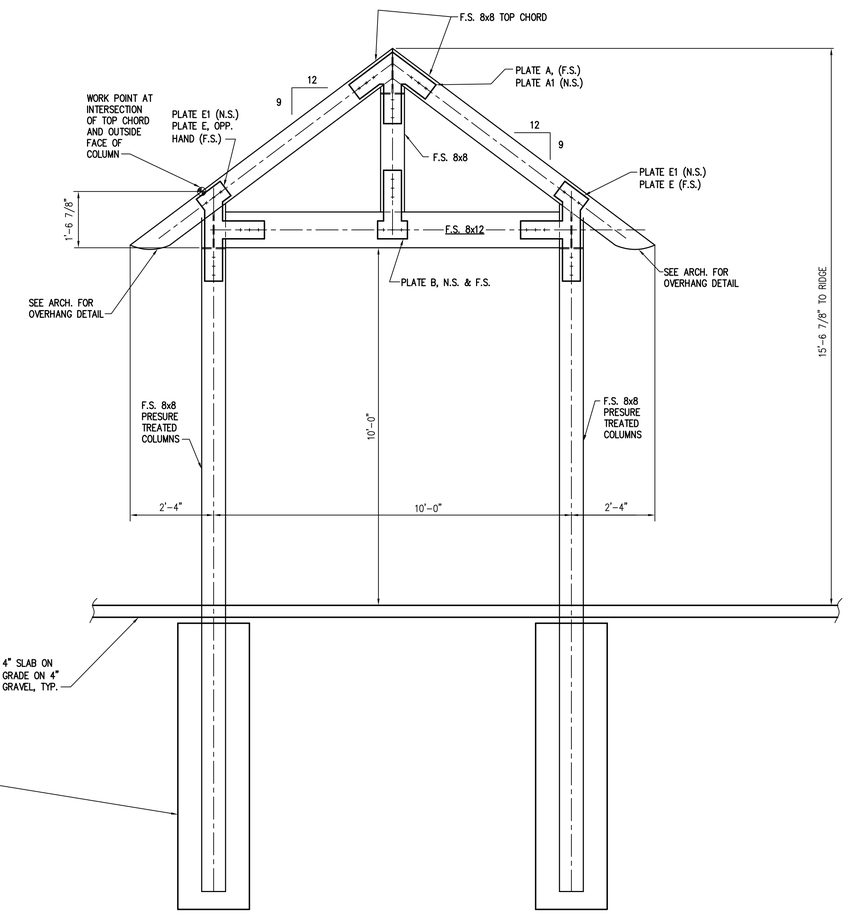

T4 TRUSS
SCALE: 1/2"=1'-0"

STRUCTURAL DESIGN BY
PI-TECH, INC.

GEORGIA REGISTERED No. SE0000061 STRUCTURAL ENGINEER MATTHEW N. ELLIS

8.22.2023
Pi-Tech, Inc. COA#PEF003000
COA Expiration: 6.30.2024

PI-TECH, INC.
115 FOREST HILL RD. - MACON, GEORGIA (478)743-5600

CLIFFVIEW PARK PAVILION
MACON, GA
FOR
OAK HAVEN STUDIO
MACON, GA

REVISIONS

DRAWN BY: RWA
CHECKED BY: MNE
DATE: AUGUST 22, 2023
SHEET NO. S4
SHEET 5 OF 9

ALL GUSSET PLATES TO BE FABRICATED FROM 3/8" ASTM A36 PLATE
ALL HOLES IN GUSSET PLATES TO BE 11/16"ø

COORDINATE WITH ARCH. FOR BLACK PAINT FINISH ON PLATES AND BOLTS HEADS.

WELDS ARE ARCHITECTURALLY EXPOSED – COORDINATE WITH ARCH. FOR WELD AND PLATE FINISH

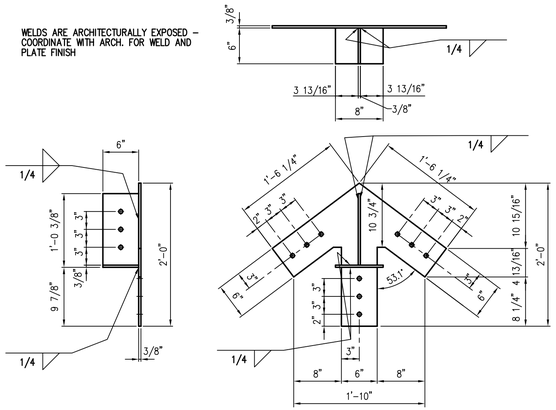

PLATE A
SCALE: 1"=1'-0"

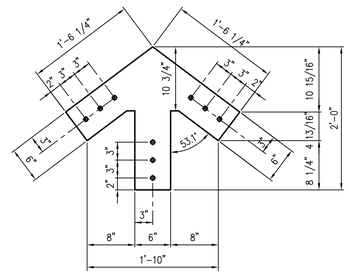

PLATE A1
SCALE: 1"=1'-0"

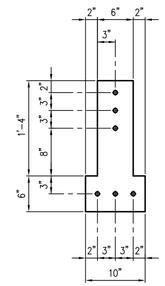

PLATE B
SCALE: 1"=1'-0"

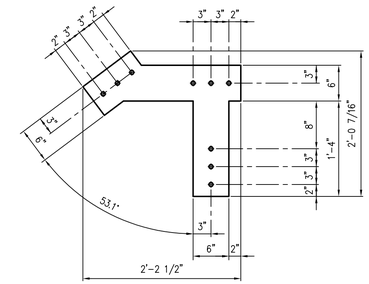

PLATE C
SCALE: 1"=1'-0"

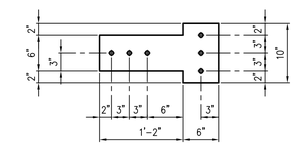

PLATE D
SCALE: 1"=1'-0"

WELDS ARE ARCHITECTURALLY EXPOSED – COORDINATE WITH ARCH. FOR WELD AND PLATE FINISH

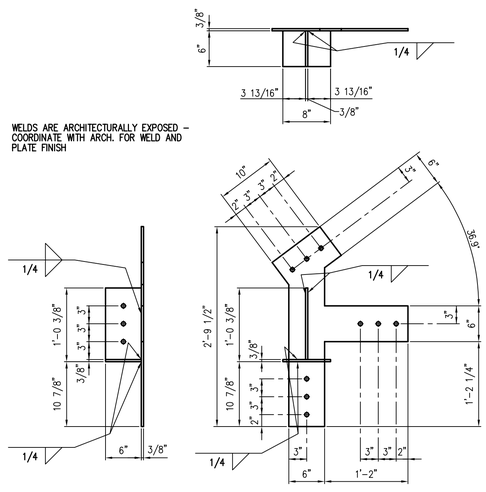

PLATE E
SCALE: 1"=1'-0"

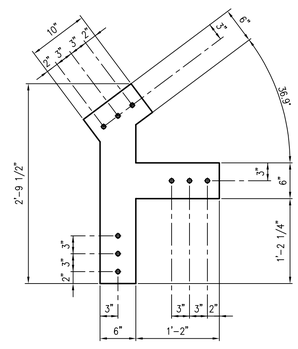

PLATE E1
SCALE: 1"=1'-0"

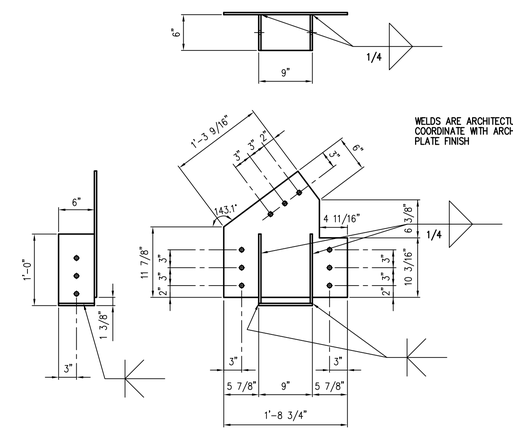

WELDS ARE ARCHITECTURALLY EXPOSED – COORDINATE WITH ARCH. FOR WELD AND PLATE FINISH

PLATE F
SCALE: 1"=1'-0"

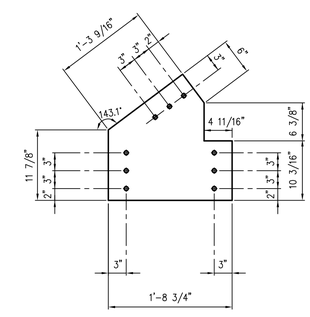

PLATE F1
SCALE: 1"=1'-0"

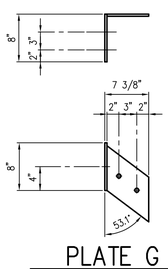

PLATE G
SCALE: 1"=1'-0"

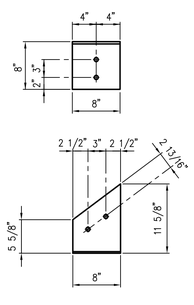

PLATE H
SCALE: 1"=1'-0"

STRUCTURAL DESIGN BY
PI-TECH, INC.

GEORGIA REGISTERED No. SE0000962 STRUCTURAL ENGINEER MATTHEW N. ELLIS

8.22.2023
Pi-Tech, Inc. COA#PEF003000
COA Expiration: 6.30.2024

PI-TECH, INC.
115 FOREST HILL RD. – MACON, GEORGIA (478)743-5600

CLIFFVIEW PARK PAVILION
MACON, GA
FOR
OAK HAVEN STUDIO
MACON, GA

REVISIONS

DRAWN BY: RWA
CHECKED BY: MNE
DATE: AUGUST 22, 2023
SHEET NO. S5
SHEET 6 OF 9

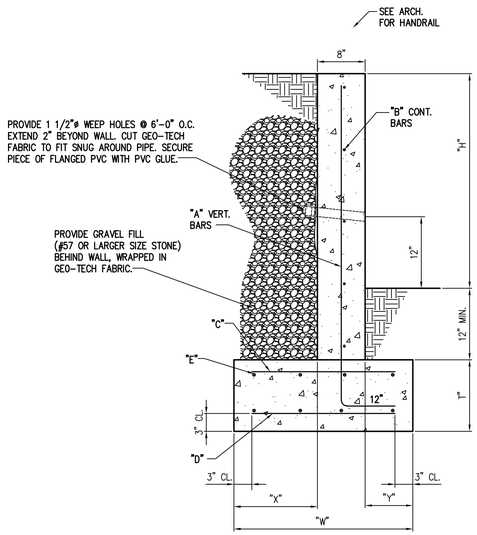

S6-A

NO SCALE

GENERAL NOTES

A- CONCRETE:
1- COMPLY WITH APPLICABLE STANDARDS OF THE AMERICAN CONCRETE INSTITUTE, STANDARD NO. 318 - LATEST ED.
2- CONCRETE SHALL BE OF NORMAL WEIGHT (150 PCF) AND SHALL DEVELOP A MIN. COMPRESSIVE STRENGTH OF 3000 PSI AT 28 DAYS. CONCRETE SHALL CONTAIN AIR-ENTRAINING ADMIXTURES CONFORMING TO ASTM C260. NO OTHER ADMIXTURE WILL BE ALLOWED. NO MATERIALS WITH FREE CHLORIDE IONS OR FLY ASH WILL BE PERMITTED.
3- REINFORCING STEEL SHALL CONFORM TO ASTM A615, GRADE 60, HAVING A MIN. YIELD POINT STRENGTH OF 60 KSI. ALL SPLICES TO BE A MINIMUM OF 40 BAR DIAMETERS, U.N.O.
4- PROVIDE A CONSTRUCTION/ EXPANSION JOINT WITHIN 10 TO 15 FEET FROM A CORNER.
5- FOR WALL HEIGHTS 'H' < 6'-0", PROVIDE WEAKENED PLANE CONTRACTION JOINTS @ 4 FT MAX O.C. AND KEYED EXPANSION JOINTS @ 100' MAX. O.C., UNLESS NOTED OTHERWISE. POUR WALL IN 100' MAX. SECTIONS, ALTERNATING POURS BETWEEN EXPANSION JOINTS. ALLOW SECTIONS TO CURE A MIN. OF 7 DAYS BEFORE POURING ALTERNATE SECTIONS.
6- CONTRACTOR SHALL COORDINATE THE RETAINING WALL JOINT LAYOUTS WITH THE ARCHITECT AND SHALL SUBMIT JOINT LAYOUT FOR APPROVAL WITH THE REINFORCING STEEL SHOP DRAWINGS.

B- GRAVEL FILL:
1- ALL GRAVEL FILL TO BE NO. 57 STONE, INSTALLED IN 24" MAX. LIFTS. CONTRACTOR TO ENSURE FILL IS CONSOLIDATED BEFORE ADDING ADDITIONAL LIFTS.

IMPORTANT NOTE:

NO SOILS REPORT WAS AVAILABLE AT THE TIME OF THESE DRAWINGS. SOME TYPICAL SOIL PROPERTIES WERE ASSUMED FOR THE DESIGN OF THE WALL. IF SITE CONDITIONS INDICATE OTHERWISE, CONTACT PROJECT ENGINEER IMMEDIATELY:

SOIL PROPERTIES:
INTERNAL ANGLE.....25°
DENSITY OF SOIL.....120 PCF
MIN. ALLOWABLE SOIL BEARING CAPACITY.....2000 PSF
ACTIVE PRESSURE COEFFICIENT (K_A).....0.41
AT-REST PRESSURE COEFFICIENT (K_0).....0.58
PASSIVE PRESSURE COEFFICIENT (K_P).....2.5
COEFFICIENT OF SLIDING FRICTION.....0.35

CONTRACTOR TO PROVIDE ENGINEERED FILL MATERIAL WHERE REQUIRED IN ORDER TO OBTAIN THE MINIMUM REQUIRED SOIL BEARING PRESSURE.

IF SITE CONDITIONS VARY FROM THESE PARAMETERS, CONTACT PROJECT ARCHITECT IMMEDIATELY.

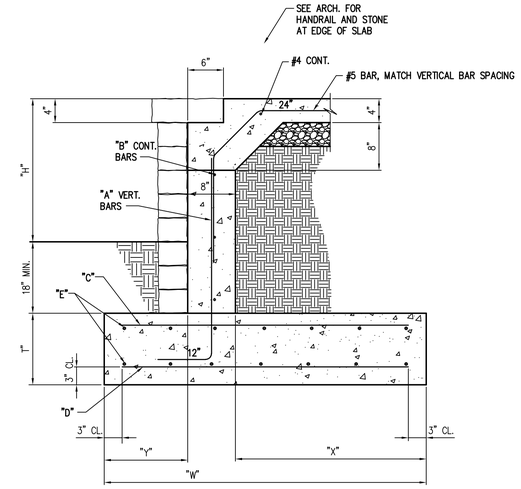

S6-B

NO SCALE

RETAINING WALL									
DIMENSIONS					REINFORCING				
WALL	FOOTING				WALL REINF.		FOOTING REINF.		
UNBALANCED FILL HEIGHT, H	DEPTH T	WIDTH W	TOE Y	HEEL X	VERT. A	HORIZ. B	C	D	E
0 FT < H ≤ 4 FT	12"	3'-8"	1'-0"	2'-0"	#5 @ 12" O.C.	#4 @ 12" O.C.	#5 @ 12" O.C.	#5 @ 12" O.C.	#5 @ 12" O.C.

FOUNDATION WALL @ BUILDING									
DIMENSIONS					REINFORCING				
WALL	FOOTING				WALL REINF.		FOOTING REINF.		
UNBALANCED FILL HEIGHT, H	DEPTH T	WIDTH W	TOE Y	HEEL X	VERT. A	HORIZ. B	C	D	E
0 FT < H ≤ 2 FT	12"	2'-8"	1'-0"	1'-0"	#5 @ 12" O.C.	#4 @ 12" O.C.	#5 @ 12" O.C.	#5 @ 12" O.C.	#5 @ 12" O.C.
2 FT < H ≤ 4 FT	12"	3'-8"	1'-0"	2'-0"	#5 @ 12" O.C.	#4 @ 12" O.C.	#5 @ 12" O.C.	#5 @ 12" O.C.	#5 @ 12" O.C.
4 FT < H ≤ 6 FT	12"	6'-0"	1'-6"	3'-10"	#5 @ 9" O.C.	#4 @ 12" O.C.	#5 @ 12" O.C.	#5 @ 12" O.C.	#5 @ 12" O.C.

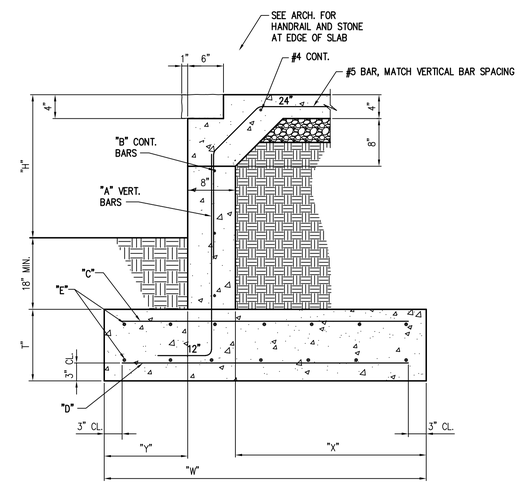

S6-B - DEDUCT OPTION

NO SCALE

STRUCTURAL DESIGN BY PI-TECH, INC.

GEORGIA REGISTERED No. SE000062 STRUCTURAL ENGINEER MATTHEW N. ELLIS

8.22.2023
Pi-Tech, Inc. COA#PEF003000
COA Expiration: 6.30.2024

PI-TECH, INC.
115 FOREST HILL RD. - MACON, GEORGIA (478)743-5600

CLIFFVIEW PARK PAVILION
MACON, GA
FOR
OAK HAVEN STUDIO
MACON, GA

REVISIONS

DRAWN BY: RWA
CHECKED BY: MNE
DATE: AUGUST 22, 2023
SHEET NO. S6
SHEET 7 OF 9

SCHEDULE OF SPECIAL INSPECTIONS SERVICES

PROJECT

MATERIAL / ACTIVITY	SERVICE	APPLICABLE TO THIS PROJECT Y/N	EXTENT	AGENT	DATE COMPLETED
1705.1.1 Special Cases (work unusual in nature, including but not limited to alternative materials and systems, unusual design applications, materials and systems with special manufacturer's requirements - add additional rows as needed.)	Submittal review, shop (3) and/or field inspection				
1. Inspection of anchors post-installed in solid grouted masonry: Per research reports including verification of anchor type, anchor dimensions, hole dimensions, hole cleaning procedures, anchor spacing, edge distances, masonry unit, grout, masonry compressive strength, anchor embedment and tightening torque	Field inspection	N	Periodic or as required by the research report issued by an approved source		
2. Aggregate Pier Inspection: The special inspector's responsibilities include, but are not limited to, review of the aggregate pier designer's use of soil parameters as presented in the project soils report, and during construction, verification of aggregate properties, type and number of lifts of aggregate, hole size and depths and top elevations of the pier elements, and applied energy. Additionally, results of qualitative tests on production aggregate pier elements such as modulus load testing, uplift pull-out testing, bottom stabilization tests and dynamic cone penetration tests, shall be reviewed to verify compliance with design specifications.	Field inspection	N	Periodic or as required by the research report issued by an approved source		
3. Timber Frame Inspection: check truss components and assemblies for dimensions and joint connection accuracy (plate configurations, bolt size, spacing) prior to erection. Check that assembled truss joints have neat, snug fit and frames are straight, plumb, level, square.	Field inspection	Y	Periodic or as required by the research report issued by an approved source	2	
1705.2.1 Structural Steel Construction					
1. Fabricator and erector documents (Verify reports and certificates as listed in AISC 360, Section N 3.2 for compliance with construction documents)	Submittal Review	Y	Each submittal	1, 2	
2. Material verification of structural steel	Shop (3) and field inspection	Y	Periodic	2	
3. Structural steel welding:					
a. Inspection tasks Prior to Welding (Observe, or perform for each welded joint or member, the QA tasks listed in AISC 360, Table N5.4-1)	Shop (3) and field inspection	Y	Observe or Perform as noted (4)	2	
b. Inspection tasks During Welding (Observe, or perform for each welded joint or member, the QA tasks listed in AISC 360, Table N5.4-2)	Shop (3) and field inspection	Y	Observe (4)	2	
c. Inspection tasks After Welding (Observe, or perform for each welded joint or member, the QA tasks listed in AISC 360, Table N5.4-3)	Shop (3) and field inspection	Y	Observe or Perform as noted (4)	2	
d. Nondestructive testing (NDT) of welded joints: see Commentary					
1) Complete penetration groove welds 5/16" or greater in risk category III or IV	Shop (3) or field ultrasonic testing - 100%	N	Periodic		
2) Complete penetration groove welds 5/16" or greater in risk category II	Shop (3) or field ultrasonic testing - 10% of welds minimum	Y	Periodic	2	
3) Welded joints subject to fatigue when required by AISC 360, Appendix 3, Table A-3.1	Shop (3) or field radiographic or Ultrasonic testing	N	Periodic		
4) Fabricator's NDT reports when fabricator performs NDT	Verify reports	Y	Each submittal (5)	1, 2	
4. Structural steel bolting:	Shop (3) and field inspection				
a. Inspection tasks Prior to Bolting (Observe, or perform tasks for each bolted connection, in accordance with QA tasks listed in AISC 360, Table N5.6-1)		N	Observe or Perform as noted (4)		
b. Inspection tasks During Bolting (Observe the QA tasks listed in AISC 360, Table N5.6-2)		N	Observe (4)		
1) Pre-tensioned and slip-critical joints					
a) Turn-of-nut with matching markings		N	Periodic		
b) Direct tension indicator		N	Periodic		
c) Twist-off type tension control bolt		N	Periodic		
d) Turn-of-nut without matching markings		N	Continuous		
e) Calibrated wrench		N	Continuous		
2) Snug-tight joints		N	Periodic		
c. Inspection tasks After Bolting (Perform tasks for each bolted connection in accordance with QA tasks listed in AISC 360, Table N5.6-3)		N	Perform (4)		
5. Visual inspection of exposed cut surfaces of galvanized structural steel main members and exposed corners of the rectangular HSS for cracks subsequent to galvanizing	Shop (3) or field inspection	N	Periodic		
6. Embedments (Verify diameter, grade, type, length, embedment. See 1705.3 for anchors)	Field inspection	Y	Periodic	2	
7. Verify member locations, braces, stiffeners, and application of joint details at each connection comply with construction documents	Field inspection	Y	Periodic	2	

SCHEDULE OF SPECIAL INSPECTIONS SERVICES

PROJECT

MATERIAL / ACTIVITY	SERVICE	APPLICABLE TO THIS PROJECT Y/N	EXTENT	AGENT	DATE COMPLETED
1705.2.2 Cold-Formed Steel Deck					
1. Manufacturer documents (Verify reports and certificates as listed in SDI QA/QC, Section 2, Paragraphs 2.1 and 2.2 for compliance with construction documents)	Submittal Review	N	Each submittal		
2. Material verification of steel deck, mechanical fasteners and welding materials	Shop (3) and field inspection	N	Periodic		
3. Cold-formed steel deck placement:	Shop (3) and field inspection				
a. Inspection tasks Prior to Deck Placement (Perform the QA tasks listed in SDI QA/QC, Appendix 1 Table 1.1)		N	Perform (4)		
b. Inspection tasks After Deck Placement (Perform the QA tasks listed in SDI QA/QC, Appendix 1 Table 1.2)		N	Perform (4)		
4. Cold-formed steel deck welding:	Shop (3) and field inspection				
a. Inspection tasks Prior to Welding (Observe the QA tasks listed in SDI QA/QC, Appendix 1 Table 1.3)		N	Observe (4)		
b. Inspection tasks During Welding (Observe the QA tasks listed in SDI QA/QC, Appendix 1 Table 1.4)		N	Observe (4)		
c. Inspection tasks After Welding (Perform the QA tasks listed in SDI QA/QC, Appendix 1 Table 1.5)		N	Perform (4)		
5. Cold-formed steel deck mechanical fastening:	Shop (3) and field inspection				
a. Inspection tasks Prior to Mechanical Fastening (Observe the QA tasks listed in SDI QA/QC, Appendix 1 Table 1.6)		N	Observe (4)		
b. Inspection tasks During Mechanical Fastening (Observe the QA tasks listed in SDI QA/QC, Appendix 1 Table 1.7)		N	Observe (4)		
c. Inspection tasks After Mechanical Fastening (Perform the QA tasks listed in SDI QA/QC, Appendix 1 Table 1.8)		N	Perform (4)		
1705.2.3. Open-Web Steel Joists and Joist Girders					
1. Installation of open-web steel joists and joist girders.					
a. End connections - welding or bolted.	per SJI CJ or SJI 100	N	Periodic		
b.. Bridging - horizontal or diagonal.					
1) Standard bridging.	per SJI CJ or SJI 100	N	Periodic		
2) Bridging that differs from the specifications listed in SJI CJ or SJI 100.		N	Periodic		
1705.2.4. Cold-Formed Steel Trusses Spanning 60 feet or Greater					
Verify temporary and permanent restraint/bracing are installed in accordance with the approved truss submittal package	Field inspection	N	Periodic		
1705.3 Concrete Construction					
1. Inspection and placement verification of reinforcing steel and prestressing tendons.	Shop (3) and field inspection	Y	Periodic	2	
2. Reinforcing bar welding:		N			
a. Verification of weldability of bars other than ASTM A706.			Periodic		
b. Inspection of single-pass fillet welds 5/16 or less in size.			Periodic		
c. Inspection of all other welds.			Continuous		
3. Inspection of anchors cast in concrete.	Shop (3) and field inspection	Y	Continuous	2	
4. Inspection of anchors post-installed in hardened concrete members per research reports, or, if no specific requirements are provided, requirements shall be provided by the registered design professional and approved by the building official, including verification of anchor type, anchor dimensions, hole dimensions, hole cleaning procedures, anchor spacing, edge distances, concrete minimum thickness, anchor embedment and tightening torque	Field inspection	N	Periodic or as required by the research report issued by an approved source		
a. Adhesive anchors installed in horizontal or upward-inclined orientation that resist sustained tension loads.		N	Continuous		
b. Mechanical and adhesive anchors not defined in 4a.		N	Continuous		
5. Verify use of approved design mix	Shop (3) and field inspection	Y	Periodic	2	
6. Prior to placement, fresh concrete sampling, perform slump and air content tests and determine temperature of concrete and perform any other tests as specified in construction documents.	Shop (3) and field inspection	Y	Continuous	2	
7. Inspection of concrete and shotcrete placement for proper application techniques	Shop (3) and field inspection	Y	Continuous	2	
8. Verify maintenance of specified curing temperature and techniques	Shop (3) and field inspection	Y	Periodic	2	
9. Inspection of prestressed concrete:	Shop (3) and field inspection	N			
a. Application of prestressing force		N	Continuous		
b. Grouting of bonded prestressing tendons		N	Continuous		
10. Inspect erection of precast concrete members		N	Periodic		
11. Verification of in-situ concrete strength, prior to stressing of tendons in post tensioned concrete and prior to removal of shores and forms from beams and structural slabs	Review field testing and laboratory reports	N	Periodic		
12. Inspection of formwork for shape, lines, location and dimensions	Field inspection	Y	Periodic	2	
13. Concrete strength testing and verification of compliance with construction documents	Field testing and review of laboratory reports	Y	Periodic	2	

SCHEDULE OF SPECIAL INSPECTIONS SERVICES

PROJECT

MATERIAL / ACTIVITY	SERVICE	APPLICABLE TO THIS PROJECT Y/N	EXTENT	AGENT	DATE COMPLETED
1705.4 Masonry Construction					
MINIMUM VERIFICATION REQUIREMENTS					
(A) Level 1, 2 and 3 Quality Assurance:					
1. Prior to construction, verification of compliance of submittals	Submittal Review	N	Prior to Construction		
(B) Level 2 & 3 Quality Assurance:					
1. Prior to construction verification of f'm and f'AAC except where specifically required by the code	Testing by unit strength method or prism test method	N	Prior to Construction		
2. During construction, verification of Slump Flow and Visual Stability Index (VSI) when self-consolidating grout is delivered to project site.	Testing by unit strength method or prism test method	N	Periodic		
(C) Level 3 Quality Assurance:					
1. During construction, verification of f'm and f'AAC for every 5,000 SF	Testing by unit strength method or prism test method	N	Periodic		
2. During construction, verification of proportions of materials as delivered to the project site for premixed or preblended mortar, prestressing grout, and grout other than self-consolidating grout.	Field inspection	N	Periodic		
MINIMUM SPECIAL INSPECTION REQUIREMENTS					
(D) Levels 2 and 3 Quality Assurance:					
1. As masonry construction begins, verify that the following are					
a. Proportions of the site-prepared mortar	Field inspection	N	Periodic		
b. Grade and size of prestressing tendons and anchorages	Field Inspection	N	Periodic		
c. Grade, type, and size of reinforcement, anchor bolts, and prestressing tendons and anchorages	Field Inspection	N	Periodic		
d. Prestressing technique	Field Inspection	N	Periodic		
e. Properties of thin-bed mortar for AAC masonry (b) Required for the first 5,000 square feet (c) Required after the first 5,000 square feet	Field Inspection	N	Level 2 - Continuous(b) Level 2 - Periodic(c)		
		N	Level 3 - Continuous		
f. Sample panel construction	Field Inspection	N	Level 2 - Periodic		
		N	Level 3 - Continuous		
2. Prior to grouting, verify that the following are in compliance:					
a. Grout space	Field Inspection	N	Level 2 - Periodic		
		N	Level 3 - Continuous		
b. Placement of prestressing tendons and anchorages	Field Inspection	N	Periodic		
c. Placement of reinforcement, connectors, and anchor bolts	Field inspection	N	Level 2 - Periodic		
		N	Level 3 - Continuous		
d. Proportions of site-prepared grout and prestresssing grout for bonded tendons	Field Inspection	N	Periodic		
3. Verify compliance of the following during construction:					
a. Materials and procedures with the approved submittals	Field inspection	N	Periodic		
b. Placement of masonry units and mortar joint construction	Field Inspection	N	Periodic		
c. Size and location of structural members	Field inspection	N	Periodic		
d. Type, size, location of anchors, including other details of anchorage of masonry to structural members, frames, or other construction	Field inspection	N	Level 2 - Periodic		
		N	Level 3 - Continuous		
e. Welding of reinforcement	Field inspection	N	Continuous		
f. Preparation, construction, and protection of masonry during cold weather (temperature below 40oF) or hot weather (temperature above 90oF)	Field inspection	N	Periodic		
g. Application and measurement of prestressing force	Field testing	N	Continuous		
h. Placement of grout and prestressing grout for bonded tendons is in compliance	Field inspection	N	Continuous		
i. Placement of AAC masonry units and construction of thin-bed mortar joints (b) Required for the first 5,000 square feet (c) Required after the first 5,000 square feet	Field inspection	N	Level 2 - Continuous(b) Level 2 - Periodic(c)		
		N	Level 3 - Continuous		
4. Observe preparation of grout specimens, mortar specimens, and/or prisms	Field inspection	N	Level 2 - Periodic		
		N	Level 3 - Continuous		
1705.5 Wood Construction					
1. For prefabricated wood structural elements, inspection of the fabrication process and assemblies in accordance with Section 1704.2.5.	In-plant review (3)	N	Periodic		
2. For high-load diaphragms, verify grade and thickness of structural panel sheathing agree with approved building plans.	Field inspection	N	Periodic		
3. For high-load diaphragms, verify nominal size of framing members at adjoining panel edges, nail or staple diameter and length, number of fastener lines, and that spacing between fasteners in each line and at edge margins agree with approved building plans	Field inspection	N	Periodic		
4. Metal-plate-connected wood trusses:		N			
a. Verification that permanent individual truss member restraint/bracing has been installed in accordance with the approved truss submittal package when the truss height is greater than or equal to 60".	Field inspection		Periodic		
b. For trusses spanning 60 feet or greater: verify temporary and permanent restraint/bracing are installed in accordance with the approved truss submittal package	Field inspection		Periodic		

INSPECTION AGENTS		
FIRM	ADDRESS	TELEPHONE NO.
1. PI-TECH, INC.	115 FOREST HILL RD MACON GA 31210	(478) 743-5600
2. SPECIAL INSPECTIONS FIRM (TBD)		

NOTES:
1. THE INSPECTION AND TESTING AGENT(S) SHALL BE ENGAGED BY THE OWNER OR THE OWNER'S AGENT, AND NOT BY THE CONTRACTOR OR SUBCONTRACTOR WHOSE WORK IS TO BE INSPECTED OR TESTED. ANY CONFLICT OF INTEREST MUST BE DISCLOSED TO THE BUILDING OFFICIAL PRIOR TO COMMENCING WORK. THE QUALIFICATIONS OF THE SPECIAL INSPECTOR(S) AND/OR TESTING AGENCIES MAY BE SUBJECT TO THE APPROVAL OF THE BUILDING OFFICIAL AND/OR THE DESIGN PROFESSIONAL.
2. THE LIST OF SPECIAL INSPECTIONS MAY BE SUBMITTED AS A SEPARATE DOCUMENT, IF NOTED SO ABOVE.
3. SHOP INSPECTIONS OF FABRICATED ITEMS ARE NOT REQUIRED WHERE THE FABRICATOR IS APPROVED IN ACCORDANCE WITH IBC SECTION 1704.2.5.1 AND LISTED IN ACTIVITY 1709.2.
4. OBSERVE: OBSERVE ON A RANDOM BASIS. OPERATIONS NEED NOT BE DELAYED PENDING THESE INSPECTIONS. PERFORM: THESE TASKS SHALL BE PERFORMED FOR EACH WELDED JOINT, BOLTED CONNECTION, OR STEEL ELEMENT.
5. NOT OF WELDS COMPLETED IN AN APPROVED FABRICATOR'S SHOP MAY BE PERFORMED BY THAT FABRICATOR WHEN APPROVED BY THE AHJ. REFER TO AISC 360, N6.

ARE SPECIAL INSPECTIONS FOR SEISMIC RESISTANCE INCLUDED IN THE STATEMENT OF SPECIAL INSPECTIONS ? NO
ARE SPECIAL INSPECTIONS FOR WIND RESISTANCE INCLUDED IN THE STATEMENT OF SPECIAL INSPECTIONS ? NO

STRUCTURAL DESIGN BY
PI-TECH, INC.

GEORGIA REGISTERED No. SE0000861 STRUCTURAL ENGINEER MATTHEW N. ELLIS

8.22.2023
Pi-Tech, Inc. COA#PEF003000
COA Expiration: 6.30.2024

PI-TECH, INC.
115 FOREST HILL RD. - MACON, GEORGIA (478)743-5600

CLIFFVIEW PARK PAVILION
MACON, GA
FOR
OAK HAVEN STUDIO
MACON, GA

REVISIONS

DRAWN BY: RWA
CHECKED BY: MNE
DATE: AUGUST 22, 2023
SHEET NO. S7
SHEET 8 OF 9

SCHEDULE OF SPECIAL INSPECTIONS SERVICES

PROJECT					
		APPLICABLE TO THIS PROJECT			
MATERIAL / ACTIVITY	SERVICE	Y/N	EXTENT	AGENT	DATE COMPLETED
1705.6 Soils					
1. Verify materials below shallow foundations are adequate to achieve the design bearing capacity.	Field inspection	Y	Periodic	2	
2. Verify excavations are extended to proper depth and have reached proper material.	Field inspection	Y	Periodic	2	
3. Perform classification and testing of compacted fill materials.	Field inspection	Y	Periodic	2	
4. Verify use of proper materials, densities, and lift thicknesses during placement and compaction of controlled fill	Field inspection	Y	Continuous	2	
5. Prior to placement of controlled fill, inspect subgrade and verify that site has been prepared properly	Field inspection	Y	Periodic	2	
1705.7 Driven Deep Foundations					
1. Verify element materials, sizes and lengths comply with requirements	Field inspection	N	Continuous		
2. Determine capacities of test elements and conduct additional load tests, as required	Field inspection	N	Continuous		
3. Inspect driving operations and maintain complete and accurate records for each element	Field inspection	N	Continuous		
4. Verify placement locations and plumbness, confirm type and size of hammer, record number of blows per foot of penetration, determine required penetrations to achieve design capacity, record tip and butt elevations and document any damage to foundation element	Field inspection	N	Continuous		
5. For steel elements, perform additional inspections per Section 1705.2	See Section 1705.2	N	See Section 1705.2		
6. For concrete elements and concrete-filled elements, perform tests and additional inspections per Section 1705.3	See Section 1705.3	N	See Section 1705.3		
7. For specialty elements, perform additional inspections as determined by the registered design professional in responsible charge	Field inspection	N	In accordance with construction documents		
1705.8 Cast-in-Place Deep Foundations					
1.Inspect drilling operations and maintain complete and accurate records for each element	Field inspection	N	Continuous		
2. Verify placement locations and plumbness, confirm element diameters, bell diameters (if applicable), lengths, embedment into bedrock (if applicable) and adequate end-bearing strata capacity. Record concrete or grout volumes	Field inspection	N	Continuous		
3. For concrete elements, perform tests and additional inspections in accordance with Section 1705.3	See Section 1705.3	N	See Section 1705.3		
1705.9 Helical Pile Foundations					
Verify installation equipment, pile dimensions, tip elevations, final depth, final installation torque and other installation data as required by construction documents.	Field inspection	N	Continuous		
1705.10 Fabricated items					
1. List of fabricated items requiring special inspection during fabrication:	Shop inspection	N	As noted in each applicable shop activity		
2. List of fabricated items to be fabricated on the premises of a fabricator approved to perform such work without special inspection (including name of approved agency providing periodic auditing):		N			
1705.11.1 Structural Wood Special Inspections For Wind Resistance					
1. Inspection of field gluing operations of elements of the main windforce-resisting system	Field inspection	N	Continuous		
2. Inspection of nailing, bolting, anchoring and other fastening of components within the main windforce-resisting system, including wood shear walls, wood diaphragms, drag struts, braces and hold-downs.	Shop (3) and field inspection	N	Periodic		
1705.11.2 Cold-formed Steel Special Inspections For Wind Resistance					
1.Inspection during welding operations of elements of the main windforce-resisting system	Shop (3) and field inspection	N	Periodic		
2. Inspection of screw attachment, bolting, anchoring and other fastening of components within the main windforce-resisting system, including shear walls, braces, diaphragms, collectors (drag struts) and hold-downs.	Shop (3) and field inspection	N	Periodic		
1705.11.3 Wind-resisting Components					
1. Roof covering, roof deck and roof framing connections.	Shop (3) and field inspection	N	Periodic		
2. Exterior wall covering and wall connections to roof and floor diaphragms.	Shop (3) and field inspection	N	Periodic		
1705.12.1 Structural Steel Special Inspections for Seismic Resistance					
1. Seismic force-resisting systems in SDC B, C, D, E, or F.	Shop (3) and field inspection	N	In accordance with AISC 341		
2. Structural steel elements in SDC B, C, D, E, or F other than those in Item 1. including struts, collectors, chords and foundation elements.	Shop (3) and field inspection	N	In accordance with AISC 341		

SCHEDULE OF SPECIAL INSPECTIONS SERVICES

PROJECT					
		APPLICABLE TO THIS PROJECT			
MATERIAL / ACTIVITY	SERVICE	Y/N	EXTENT	AGENT	DATE COMPLETED
1705.12.2 Structural Wood Special Inspections for Seismic Resistance					
1. Field gluing operations of elements of the seismic-force resisting system for SDC C, D, E or F.	Field inspection	N	Continuous		
2. Nailing, bolting, anchoring and other fastening of components within the seismic-force-resisting system including wood shear walls, wood diaphragms, drag struts, shear panels and hold-downs for SDC C, D, E or F.	Shop (3) and field inspection	N	Periodic		
1705.12.3 Cold-formed Steel Light-Frame Construction Special Inspections for Seismic Resistance					
1. During welding operations of elements of the seismic-force-resisting system for SDC C, D, E or F.	Shop (3) and field inspection	N	Periodic		
2. Screw attachment, bolting, anchoring and other fastening of components within the seismic-force-resisting system including shear walls, braces, diaphragms, collectors (drag struts) and hold-downs for SDC C, D, E or F.	Shop (3) and field inspection	N	Periodic		
1705.12.4 Designated Seismic Systems Verification Special Inspections for Seismic Resistance					
For SDC C, D, E or F, inspect and verify that that the component label, anchorage or mounting conforms to the certificate of compliance in accordance with ASCE 7 Section 13.2.2.	Field inspection	N	Periodic		
1705.12.5 Architectural Components Special Inspections for Seismic Resistance					
1. For SDC D, E or F, inspection during the erection and fastening of exterior cladding and interior or exterior veneer more than 30 feet above grade or walking surface and weighing more than 5 psf.	Field inspection	N	Periodic		
2. For SDC D, E or F, inspection during the erection and fastening of interior nonbearing walls more than 30 feet above grade or walking surface and weighing more than 15 psf.	Field inspection	N	Periodic		
3. For SDC D, E or F, inspection during the erection and fastening of exterior nonbearing walls more than 30 feet above grade or walking surface.		N			
4. For SDC D, E or F, inspection during anchorage of access floors	Field inspection	N	Periodic		
1705.12.6 Plumbing, Mechanical and Electrical Components Special Inspections for Seismic Resistance					
1. Inspection during the anchorage of electrical equipment for emergency or standby power systems in SDC C, D, E or F	Field inspection	N	Periodic		
2. Inspection during the anchorage of other electrical equipment in SDC E or F	Field inspection	N	Periodic		
3. Inspection during installation and anchorage of piping systems designed to carry hazardous materials, and their associated mechanical units in SDC C, D, E or F	Field inspection	N	Periodic		
4. Inspection during the installation and anchorage of HVAC ductwork designed to contain hazardous materials in SDC C, D, E or F	Field inspection	N	Periodic		
5. Inspection during the installation and anchorage of vibration isolation systems in SDC C, D, E or F where nominal clearance of 1/4 inch or less is required by the approved construction documents	Field inspection	N	Periodic		
6. Inspection during installation of mechanical and electrical equipment, including duct work, piping systems and their structural supports, where automatic fire sprinkler systems are installed in structures assigned to SDC C, D, E, or F to verify one of the following unless flexible sprinkler hose fittings are used:		N			
a. ASCE/SEI 7, Section 13.2.3 minimum required clearances have been provided.	Field inspection		Periodic		
b. A three inch or greater nominal clearance has been provided between fire protection sprinkler system drops and sprigs and: structural members not used collectively or independently to support the sprinklers; equipment attached to the building structure; and other systems' piping	Field inspection		Periodic		
1705.12.7 Storage Racks Special Inspections for Seismic Resistance					
Inspection during the anchorage of storage racks 8 feet or greater in height in structures assigned to SDC D, E or F.	Field inspection	N	Periodic		
1705.12.8 Seismic Isolation Systems					
Inspection during the fabrication and installation of isolator units and energy dissipation devices used as part of the seismic isolation system in structures assigned to SDC B, C, D, E or F.	Shop and field inspection	N	Periodic		
1705.12.9 Cold-formed Steel Special Bolted Moment Frames					
Inspection of installation of cold-formed steel special bolted moment frames in the seismic force-resisting systems in structures assigned to SDC D, E or F.	Field inspection	N	Periodic		
1705.13.1 Structural Steel Testing for Seismic Resistance					
1. Nondestructive testing of structural steel in the seismic force-resisting systems in accordance with AISC 341 in structures assigned to SDC B, C, D, E or F.	Field test	N	Periodic		
2. Nondestructive testing of structural steel elements in the seismic force-resisting systems not covered in 1 above including struts, collectors, chords and foundation elements in accordance with AISC 341 in structures assigned to SDC B, C, D, E or F.	Field test	N	Periodic		

SCHEDULE OF SPECIAL INSPECTIONS SERVICES

PROJECT					
		APPLICABLE TO THIS PROJECT			
MATERIAL / ACTIVITY	SERVICE	Y/N	EXTENT	AGENT	DATE COMPLETED
1705.13.2 Seismic Certification of Nonstructural Components					
Review certificate of compliance for designated seismic system components in structures assigned to SDC B, C, D, E or F.	Certificate of compliance review	N	Each submittal		
1705.13.3 Seismic Certification of Designated Seismic Systems					
Review certificate of compliance for designated seismic system components in structures assigned to SDC C, D, E or F	Certificate of compliance review	N	Each submittal		
1705.13.4 Seismic Isolation Systems					
Test seismic isolation system in accordance with ASCE 7 Section 17.8 in structures assigned to SDC B, C, D, E or F.	Prototype testing	N	Per ASCE 7		
1705.14 Sprayed Fire-resistant Materials					
1. Verify surface condition preparation of structural members	Field inspection	N	Periodic		
2. Verify minimum thickness of sprayed fire-resistant materials applied to structural members	Field inspection	N	Periodic		
3. Verify density of the sprayed fire-resistant material complies with approved fire-resistant design	Field inspection and testing	N	Per IBC Section 1705.14.5		
4. Verify the cohesive/adhesive bond strength of the cured sprayed fire-resistant material	Field inspection and testing	N	Per IBC Section 1705.14.6		
5. Condition of finished application	Field inspection	N	Periodic		
1705.15 Mastic and Intumescent Fire-Resistant Coatings					
Inspect and test mastic and intumescent fire-resistant coatings applied to structural elements and decks per AWCI 12-B	Field inspection and testing	N	Periodic		
1705.16 Exterior Insulation and Finish Systems (EIFS)					
Inspection of water-resistive barrier over sheathing substrate	Field inspection	N	Periodic		
1705.17 Fire-Resistant Penetrations and Joints					
1. Inspect penetration firestop	Field testing	N	Per ASTM E2174		
2. Inspect fire-resistant joint systems	Field testing	N	Per ASTM E2393		
1705.18 Smoke Control Systems					
1. Leakage testing and recording of device locations prior to concealment	Field testing	N	Periodic		
2. Prior to occupancy and after sufficient completion, pressure difference testing, flow measurements, and detection and control verification	Field testing	N	Periodic		

INSPECTION AGENTS		
FIRM	ADDRESS	TELEPHONE NO.
1. PI-TECH, INC.	115 FOREST HILL RD MACON GA 31210	(478) 743-5600
2. SPECIAL INSPECTIONS FIRM (TBD)		

NOTES:
1. THE INSPECTION AND TESTING AGENT(S) SHALL BE ENGAGED BY THE OWNER OR THE OWNER'S AGENT, AND NOT BY THE CONTRACTOR OR SUBCONTRACTOR WHOSE WORK IS TO BE INSPECTED OR TESTED. ANY CONFLICT OF INTEREST MUST BE DISCLOSED TO THE BUILDING OFFICIAL PRIOR TO COMMENCING WORK. THE QUALIFICATIONS OF THE SPECIAL INSPECTOR(S) AND/OR TESTING AGENCIES MAY BE SUBJECT TO THE APPROVAL OF THE BUILDING OFFICIAL AND/OR THE DESIGN PROFESSIONAL.
2. THE LIST OF SPECIAL INSPECTORS MAY BE SUBMITTED AS A SEPARATE DOCUMENT, IF NOTED SO ABOVE.
3. SHOP INSPECTIONS OF FABRICATED ITEMS ARE NOT REQUIRED WHERE THE FABRICATOR IS APPROVED IN ACCORDANCE WITH IBC SECTION 1704.2.5.1 AND LISTED IN ACTIVITY 1708.2.
4. CODEPAG: CODEPAG ON A RANDOM BASIS, OPERATIONS NEED NOT BE DELAYED PENDING THESE INSPECTIONS. PERFORM THESE TASKS SHALL BE PERFORMED FOR EACH WELDED JOINT, BOLTED CONNECTION, OR STEEL ELEMENT.
5. NDT OF WELDS COMPLETED IN AN APPROVED FABRICATOR'S SHOP MAY BE PERFORMED BY THAT FABRICATOR WHEN APPROVED BY THE AHJ. REFER TO AISC 360, N6.

ARE SPECIAL INSPECTIONS FOR SEISMIC RESISTANCE INCLUDED IN THE STATEMENT OF SPECIAL INSPECTIONS ? NO
ARE SPECIAL INSPECTIONS FOR WIND RESISTANCE INCLUDED IN THE STATEMENT OF SPECIAL INSPECTIONS ? NO

STRUCTURAL DESIGN BY
PI-TECH, INC.

GEORGIA REGISTERED No. SE0000962 STRUCTURAL ENGINEER MATTHEW N. ELLIS

8.22.2023
Pi-Tech, Inc. COA#PEF003000
COA Expiration: 6.30.2024

PI-TECH, INC.
115 FOREST HILL RD. - MACON, GEORGIA (478)743-5600

CLIFFVIEW PARK PAVILION
MACON, GA
FOR
OAK HAVEN STUDIO
MACON, GA

REVISIONS

DRAWN BY: RWA
CHECKED BY: MNE
DATE: AUGUST 22, 2023
SHEET NO. S8
SHEET 9 OF 9