Macon-Bibb County Board of Commission
Procurement Department
700 Popular Street, Suite 308
Government Center
Macon, GA 31201
Phone: 478-803-0550 Fax: 478-751-7252
Website: *www.maconbibb.us/purchasing*

Chauncey K. Wilmore

Chauncey Wilmore
Senior Procurement Officer

INVITATION FOR BID

Bidder's Sealed Envelope shall be marked with the following information:

JEFFERSONVILLE RD FROM S.R. 3/EMERY HWY TO RECREATION RD AND MILLERFIELD RD FROM JEFFERSONVILLE RD TO BRISTOL DR IN BIBB COUNTY, GEORGIA

SCHEDULE OF IFB PKG #18-026-CW

Solicitation Issued	**January 29, 2018**
A Mandatory Pre-Bid Conference is scheduled for February 08, 2018 at 10:00 A.M. at the Macon-Bibb County Engineering Conference Room located at 780 Third Street, Macon, GA 31201. Failure to attend the Pre-Bid Conference shall cause bidder to be deemed non-responsive.	**February 08, 2018 10:00 A.M.**
Deadline for requests for clarifications and questions. These requests must be emailed to: *cwilmore@maconbibb.us*	**February 16, 2018 12:00 P.M.**
Clarifications, modifications and/or answers will be posted on the Macon-Bibb County website: *www.maconbibb.us/purchasing*	**February 23, 2018 3:00 P.M.**
Sealed bids will be accepted until the opening date and time. Any late submittals received will not be considered. Submittals are to be delivered to Macon-Bibb County Procurement Department, 700 Popular Street, Suite 308, Macon, GA 31201.	**March 08, 2018 12:00 P.M.**
Sealed bids will be opened.	**March 08, 2018 2:00 P.M.**

THIS FORM MUST BE SIGNED AND SUBMITTED TO BE CONSIDERED FOR AWARD		
COMPANY NAME:		**DATE:**
MAILING ADDRESS:		**PHONE:**
CITY:		**FAX:**
STATE:	**ZIP:**	**SSN OR FEDERAL TAX ID:**
EMAIL:	**TITLE OF AUTHORIZED REPRESENTATIVE:**	
PRINTED NAME:	**AUTHORIZED SIGNATURE:**	

If you do not want to respond to this solicitation or would like to be removed from the Vendor Data Base, mark the appropriate space and return this sheet only and fax/mail to this office immediately. Remove our firm from your Vendor's List for this service __No Bid will be submitted

TABLE OF CONTENTS

1. INFORMATION AND INSTRUCTIONS TO BIDDERS.....3

2. SUBMITTAL CHECKLIST.....9

3. INTRODUCTION 10

4. SCOPE OF WORK.....11

5. MINIMUM REQUIREMENTS.....11

6. PROJECT PLANS 12

7. APPENDICES:

   7.1 Appendix A - Contract Compliance Requirements and Forms 13

   7.2 Appendix B - Bonding and Insurance Requirements 31

   7.3 Appendix C – Required Form Submittals.....37

8. ATTACHMENTS:

   8.1 Attachment A – Scope of Work.....55

   8.2 Attachment B – Bid Cost Form 61

9. EXHIBITS:

   9.1 Exhibit A thru J – State and Federal Requirements.....88

   9.2 Exhibit K – Project Specific Special Provisions.....127

   9.3 Exhibit L – GDOT Standard Specifications By Reference 543

IFB # 18-026-CW
WIDENING AND RECONSTRUCTION OF JEFFERSONVILLE RD FROM S.R. 3/EMERY HWY TO RECREATION RD AND MILLERFIELD RD FROM JEFFERSONVILLE RD TO BRISTOL DR
Bibb County, Georgia

INFORMATION AND INSTRUCTIONS TO BIDDERS

1. **Invitation for Bids:** This Invitation for Bids ("IFB") is for qualified Bidders ("Bidder" or "Bidders") to provide the construction for the Widening and Reconstruction of Jeffersonville Rd from S.R. 3/Emery Hwy to Recreation Rd and Millerfield Rd from Jeffersonville Rd to Bristol Dr in Bibb County, Georgia. A detailed Scope of Work is set forth in this IFB

2. **Solicitation Method:** This solicitation is being conducted in accordance with all applicable provisions of the Macon-Bibb County Code of Ordinances. By submitting a Bid in reference to this solicitation, a Bidder acknowledges that it is familiar with all laws applicable to this solicitation, including, but not limited to, the County's Code of Ordinances, which laws are incorporated into this IFB by reference.

3. **Minimum Qualifications:** Each Bidder and team member shall have the minimum experience set forth in this IFB. Bidders submitting a bid in excess of $2,000,000 must be prequalified with GDOT. Bidders submitting a bid $2,000,000 or less must be either a prequalified contractor or a registered subcontractor with GDOT.

4. **Certificate of Authority to Transact Business in Georgia:** Each Bidder must submit documentation that demonstrates it is duly authorized to conduct business in the State of Georgia with its bid. This requirement also applies to Joint Venture (JV) Team Members, Sub-Consultants and Sub-Contractors.

5. **Business License:** Bidder is requested to submit a copy of its current, valid business license with its Bid. If the Bidder is a Georgia corporation, Bidder is requested to submit a valid county or city business license. If Bidder is a joint venture, Bidder is requested to submit valid business licenses for each member of the joint venture. If the Bidder is not a Georgia corporation, Bidder is requested to submit a Certificate of Authority to Transact Business in the State of Georgia and a copy of its current, valid business license issued by its home jurisdiction.

6. **Professional License:** Proponent must attach a copy of any professional license required by this IFB with its response.

7. **General Contractor's License:** Bidders responding to this IFB must provide a copy of its current Georgia General Contractor's License as required by O.C.G.A. § 43-41-6, et seq. The Georgia General Contractor's License must be issued in the name of the Bidder or in the name of its qualifying agent. If a proposed Bidder is relying upon a qualifying agent's Georgia General Contractor's License, then the name of the proposed Bidder must be set forth on the license as an affiliated business organization/dependent licensee. All licenses must be current, valid, and issued in compliance with applicable law. Failure to provide this license with the Bid will result in the proposed Bid being deemed non-responsive.

8. **No Offer by County and Firm Offer by Bidder:** This solicitation does not constitute an offer by County to enter into an agreement and cannot be accepted by any Bidder to form an agreement. This solicitation is only an invitation for offers from interested Bidders and no offer shall bind County. A Bidder's offer is a firm offer and may not be withdrawn except as provided in this IFB, and in the County's Code of Ordinances and other applicable law.

9. **Bid Duration:** Bids submitted in response to this IFB must be valid for a period of One Hundred and Twenty (120) calendar days from the Bid Submission Deadline and must be marked as such.

10. **Bid Submission Deadline:** Responses to this IFB will be received by the Macon-Bibb County Board of Commissioners Procurement Department, 700 Poplar Street, Suite 308, Macon Georgia 31201, until **12:00 p.m., Eastern Standard Time (E.S.T.)** on **Thursday, March 08, 2018**. Late bids will not be considered. Envelopes shall be identified on the outside as "Bid #18-026-CW – Widening and Reconstruction of Jeffersonville Road" and delivered by hand or mailed to:

    Macon-Bibb County Procurement Department
    700 Poplar Street, Suite 308
    Macon, Georgia 31201

11. **Pre-Bid Conference:** Each Bidder, or its representative, is required to attend the Mandatory Pre-Bid Conference scheduled for **Thursday, February 08, 2018**, at **10:00 a.m. ET** at the Macon-Bibb County Engineering Conference Room located at 780 Third Street, Macon, GA 31201. During the Pre-Bid Conference, the general requirements of the project will be discussed. Any additional questions raised by potential Bidders will be discussed. Verbal answers to questions during the Pre-Bid Conference will not be authoritative. Each Bidder must be fully informed regarding all existing and expected conditions and matters which might affect the cost or performance of the Services. It should be emphasized, however, that nothing stated or discussed during the course of this conference shall be considered to modify, alter or change the requirement of the solicitation documents, unless it shall be subsequently incorporated into an addendum to the solicitation documents.

12. **Solicitation Questions; Prohibited Contacts:** Any questions regarding this IFB should be submitted in writing to Chauncey Wilmore, Senior Procurement Officer, Macon-Bibb County Procurement Department, 700 Popular Street, Macon, Georgia, 31201, or by email to cwilmore@maconbibb.us , on or before **Friday, February 16, 2018 by 12:00 pm E.S.T**. Questions received after the designated period may not be considered. Any response made by the County will be provided in writing to all Bidders by addendum. It is the responsibility of each Bidder to obtain a copy of any Addendum issued for this solicitation by monitoring the County's website at: ***www.maconbibb.us/purchasing*** No Bidder may rely on any verbal response to any question submitted concerning this IFB. All Bidders and representatives of Bidders are strictly prohibited from contacting any other County employees, County Officials, Elected Officials or any third-party representatives of the County on any matter having to do with this IFB. All communications by any Bidder concerning this IFB must be made to the Macon-Bibb County Procurement Department.

13. **Ownership of Bids:** Each Bid submitted to the County will become the property of the County, without compensation to a Bidder for the County's use, in its discretion. The County shall not be liable for any bid preparation costs incurred by Bidder.

14. **Georgia Open Records Act:** Information provided to the County is subject to disclosure under the Georgia Open Records Act, O.C.G.A. § 15-18-70 et. seq. Pursuant to O.C.G.A. § 50-18-72(a)(34), "[a]n entity submitting records containing trade secrets that wishes to keep such records confidential under this paragraph shall submit and attach to the records an affidavit affirmatively declaring that specific

information in the records constitute trade secrets pursuant to Article 27 of Chapter 1 of Title 10 [O.C.G.A. § 10-1-760 et seq.]".

15. **Bonding and Insurance Requirements:** The Bonding and Insurance requirements for any Agreement that may be awarded pursuant to this IFB are set forth in Appendix B, Bonding and Insurance Requirements. Bidder must provide a copy of a current certificate of insurance evidencing any existing commercial general liability policies issued for Bidder, if any. For purposes of this section, "Bidder" shall mean an individual, corporation or other corporate entity submitting a bid in connection with this solicitation, including each joint venture partner if Bidder is a joint venture.

16. **Applicable GDOT Disadvantaged Business Program:** The DBE Programs applicable to this solicitation are set forth in Appendix A: Contract Compliance Requirements, included in this IFB. By submitting a Bid in response to this solicitation, each Bidder agrees to comply with such applicable DBE Program.

17. **Sub-contractors and Manufacturers:** Bidders are required to submit, in writing, the addresses of any proposed Sub-Contractors or equipment manufacturers listed in the Bid and may be required to submit other material information relative to proposed subcontractors. County reserves the right to disapprove any proposed Sub-Contractors whose technical or financial ability, or resources, or experience are deemed inadequate.

18. **Examination of Bid Documents:**

18.1 Each Bidder is responsible for examining with appropriate care the complete IFB and all Addenda and for informing itself with respect to all conditions which might in any way affect the cost or the performance of any Services. Failure to do so will be at the sole risk of the Bidder, who is deemed to have included all costs for performance of the Services in its Bid. Bid documents may be examined and obtained at Macon-Bibb County Procurement Department by calling (478)803-0550 or may be viewed and downloaded from one of the links included below:

Georgia Procurement Registry web site: https://ssl.doas.state.ga.us/PRSapp/PR_index.jsp
Macon-Bibb Procurement page: www.maconbibb.us/purchasing

18.2 Each Bidder shall promptly notify County in writing should the Bidder find discrepancies, errors, ambiguities or omissions in the Bid Documents, or should their intent or meaning appear unclear or ambiguous, or should any other question arise relative to the IFB. Replies to such notices may be made in the form of an addendum to the IFB, which will be issued simultaneously to all potential Bidders.

18.3 County may in accordance with applicable law, by addendum, modify any provision or part of the IFB at any time prior to the Bid due date and time.

18.4 Each Bidder must confirm Addenda have been received and acknowledge receipt by executing the Acknowledgment of Addenda form provided with each Addendum.

18.5 The County may waive any technicalities and formalities. The County reserves the right to cancel the IFB in its entirety.

18.6 Unit price must be shown on the Bid Cost Form in this IFB. All bids shall be tabulated, totaled and checked for accuracy. The unit price will prevail in case of errors. The quantities shown on the bid cost form are estimates based on the known conditions. The quantities indicated in the "As Directed by Engineer" Column are included in the Total Quantity and are included in anticipation of the unknown conditions that may exist and may be discovered during the execution of this contract.

18.7 Pursuant to the Macon-Bibb County Code of Ordinance, bids may be disqualified by the Macon-Bibb Board of Commission as a result of, but not necessarily limited to, the following reasons:

18.7.1 Failure to follow Macon-Bibb County's bid schedule;
18.7.2 Failure to return applicable compliance and/or specification sheets;
18.7.3 Failure to return applicable addenda;
18.7.4 Failure to provide information on alternates or equivalents, when allowed;
18.7.5 Failure to provide bid bond when specifically stated will result in automatic rejection;
18.7.6 Failure of Bidder to sign all requested documents;
18.7.7 Failure to submit bid by deadline;
18.7.8 Failure of Contractor to extend prices;
18.7.9 Failure to hold firm pricing;
18.7.10 Failure to meet specified delivery requirements; and
18.7.11 Prices for services or items that exceeds the department's budgeted amount allowed for those items.

19. Illegal Immigration Reform and Enforcement Act: This IFB is subject to the Illegal Immigration Reform and Enforcement Act of 2011 ("**Act**"), formerly known as the Georgia Security and Immigration Compliance Act. Pursuant to Act, the Bidder must provide with its Bid proof of its registration with and continuing and future participation in the E-Verify Program established by the United States Department of Homeland Security. Completed Contractor Affidavit, Illegal Immigration Reform and Enforcement Act Forms attached herein as Forms F6.6 and F6.7, Appendix C, Required Submittal Forms must be submitted with the Bid at the time of submission. Under state law, the County cannot consider any Bid which does not include the completed forms. Where the business structure of a Bidder is such that Bidder is required to obtain an Employer Identification Number (EIN) from the Internal Revenue Service, Bidder must complete the Contractor Affidavit on behalf of, and provide a Federal Work Authorization User ID Number issued to, the Bidder itself. Where the business structure of a Bidder does not require it to obtain an EIN, each entity comprising Bidder must submit a separate Contractor Affidavit. It is not the intent of this notice to provide detailed information or legal advice concerning the Act. All Bidders intending to do business with the County are responsible for independently apprising themselves of and complying with the requirements of the Act and assessing its effect on County solicitations and their participation in those solicitations. For additional information on the E-Verify program or to enroll in the program, go to: https://e-verify.uscis.gov/enroll.

20. Multiple Awards: The County reserves, in its sole discretion, the right to make one (1) award, no award, or award to multiple to multiple Bidders. The award(s) will be based on the bid in its entirety or by components.

21. Award and Execution of Agreement: If the County awards an Agreement pursuant to this solicitation, the County will prepare and forward to the Bidder an Agreement for execution substantially in the form of the Draft Agreement included in this IFB. All Bidders should thoroughly review the document prior to submitting a bid. Any proposed revisions to the terms or language of this document must be submitted in writing with the Bidder's response to the Invitation for Bids. Since proposed revisions may result in a bid being rejected if the revisions are unacceptable to the County. Bidder should review any proposed revisions with an Authorized Representative having authority to execute the Agreement. Upon approval of the Bidder by the Macon-Bibb County Board of Commissioners, the County will provide the Bidder with three (3) unsigned Agreements. The Bidder shall execute and return to the County three (3) Agreements, with required insurance certificates and other documents as listed in this IFB or required by the County, no more than ten (10) calendar days after receipt of the Agreement.

22. Joint Ventures: Each party to a Joint Venture will be required to fully complete and submit the Required Submittal Forms unless otherwise indicated in this IFB.

23. **Conflict of Interest:** Bidders are advised to read and familiarize themselves with the conflict of interest provisions of this IFB. The County reserves the right to issue IFBs for specific projects that are independent of IFB #18-026-CW Widening and Reconstruction of Jeffersonville Road from S.R. 3/Emery Hwy to Recreation Rd and Millerfield Rd from Jeffersonville Rd to Bristol Dr in Bibb County, Georgia except as stated in this IFB these Instructions, and the Notice to Bidders concerning Conflicts of Interests, successful Bidders under this IFB are not precluded from responding to such solicitations.

24. **Tax Exemption Status:** The County is exempt from Federal Excise Tax or Georgia Sales Tax with regard to goods and services purchased directly by Bibb County. Exemption certificates are furnished upon request.

25. **Codes, Permits, Fees, Licenses and Laws:** All permits, fees, arrangements for inspections, licenses, and costs incurred for the same shall be the sole responsibility of the successful Bidder. All materials, labor and construction must comply with all applicable rules and regulations of local, state and/or national codes, laws and ordinances of all authorities having jurisdiction over the project, which shall apply to the contract throughout and will be deemed to be included in the contract the same as though herein written out in full.

26. **Non-Collusion**

    By submitting a bid in response to this solicitation, the Bidder represents that in the preparation and submission of its bid, said Bidder did not either directly or indirectly enter into any combination or arrangement with any person, Bidder, Corporation or enter into any agreement, participate in any collusion, or otherwise take any action in the restraint of free, competitive bidding in violation of the Sherman Act (15 U.S.C. Section I or Section 59.1-9.1 through 59.1-9.17 or Sections 59.1 – 68.6 through 59.68.8). Collusion and fraud in bid preparation shall be reported to the State of Georgia Attorney General and the United States Justice Department.

27. **Bid Bond**

    Bids, in order to be considered, shall be accompanied by a bid bond, payable to the Owner in amount not less than five-percent (5%) of the total base bid. This bid security shall become payable to the Owner only if the bidder, to whom award is made, should fail to execute a contract with Owner and furnish bond and insurance in accordance with terms of the contract within ten (10) days after notification of award. If Contract is awarded, the Bidder will promptly enter into a Contract and furnish Performance Bond and Payment Bonds as provided by law and approved by Macon-Bibb County. This results in a Performance Bond of 100 Percent (100%) of the Contract amount and a Payment Bond of 110 Percent (110%) of the Contract amount.

28. **Bidder Representation**

    Each bidder, by making his bid, represents that he has read and understands the bidding documents; and visited the site, and become familiar with the local conditions under which the work is to be performed. Bidders shall examine the areas wherein work of this project is to be carried out and shall take in to consideration all conditions that might affect his work. Failure of the bidder to inspect firsthand the areas affected by work in this project shall not relieve him of the obligation to comply fully with the scope of the work as defined herein. No consideration will be given any claim based on lack of knowledge of existing conditions, except where the Contract Documents make definite provisions for adjustment of cost or extension of time due to existing conditions that cannot be readily ascertained.

29. **Document Discrepancies**

    Should the bidder find discrepancies in, or omissions from the documents, he shall at once notify the Macon-Bibb County Procurement Department. Requests for Interpretations of Drawings and Specifications shall be made in writing to the Macon-Bibb County Procurement Department not later than seven (7) days prior to receipt of bids, email preferred, to cwilmore@maconbibb.us. Any subsequent instructions to bidders will be issued in the form of addenda to the specifications and sent to the bidder.

All addenda shall be enumerated in the Bid Form. All definitions set forth in the specifications are applicable to this Instruction to Bidders, the Bid Form and the proposed Contract Documents including, but not limited to, drawings, project manual, and any addenda issued prior to receipt of bids. Addenda are written or graphic instruments issued prior to the execution of the Contract that may modify or interpret the bidding documents by deletion, additions, clarifications or corrections. Addenda will become part of the Contract Documents when the Construction Contract is executed.

IFB PACKAGE # 18-026-CW
Widening and Reconstruction of Jeffersonville Road from S.R. 3/Emery Hwy to Recreation Rd and Millerfield Rd from Jeffersonville Rd to Bristol Dr
Bibb County, Georgia

SUBMITTAL CHECKLIST

1. Please use the following checklist to verify that all required information is included in your bid.
2. It is the sole responsibility of each bidder to ensure that their bid is inclusive of all submittals outlined below or elsewhere in this IFB.
3. **Failure to submit any of the items below may cause rejection of the Bid. Bidder must return each and every page of this IFB**
4. The bid documents must be submitted as follows: one (1) marked "Original" and two (2) identical copies including all required attachments labeled with the Name and Number of the IFB. Please submit a Flash Drive containing an electronic copy of the Bid Cost Form in the Excel spreadsheet format as provided in the IFB.
5. The County will not consider any bid that does not include completed Illegal Immigration Reform and Enforcement Act Affidavit Form(s).
6. Any modifications to the Bid Cost Form may result in a bid being deemed Non-Responsive.

	DOCUMENTATION DESCRIPTION	**INITIAL IF INCLUDED**
1.	**BID SOLICITATION FORM**	_____
2.	**BID**	_____
3.	**SUBMITTAL CHECKLIST (THIS FORM)**	_____
4.	**ADDENDA (IF APPLICABLE)**	_____
5.	**BID COST FORM (ATTACHMENT B)**	_____
6.	**REQUIRED FORM SUBMITTALS (APPENDIX C)**	
	F6.1 W-9 FORM	_____
	F6.2 NON-CONFLICT OF INTEREST	_____
	F6.3 NON-COLLUSION FORM	_____
	F6.4 BUSINESS ENTITY CERTIFICATE	_____
	F6.5 CERTIFICATE OF AUTHORITY-JOINT VENTURE	_____
	F6.6 ILLEGAL IMMIGRATION REFORM AND ENFORCEMENT ACT – CONTRACTOR AFFIDAVIT	_____
	F6.7 ILLEGAL IMMIGRATION REFORM AND ENFORCEMENT ACT – SUB-CONTRACTOR AFFIDAVIT	_____
	F6.8 SUB-CONTRACTOR INFORMATION FORM	_____
	F6.9 ACKNOWLEDGEMENT OF BIDDER	_____
	F6.10 REFERENCE AND RELEASE FORM	_____
	F6.11 ACKNOWLEDGEMENT OF INSURANCE REQUIREMENTS	_____
	F6.12 EXCEPTION TO SPECIFICATION FORM	_____
7.	**PROFESSIONAL LICENSE (GENERAL CONTRACTOR'S LICENSE)**	_____
8.	**BUSINESS LICENSE**	_____
9.	**DISAVANTAGED BUSINESS ENTERPRISE (DBE) PROGRAM**	_____
10.	**GDOT PREQUALIFICATION DOCUMENTATION**	_____
11.	**BID BOND**	_____

_____ _____ _____
Printed Name **Title** **Date**

_____ _____
Signature **Firm Name**

_____ _____
Email Address **Phone Number**

IFB PACKAGE # 18-026-CW
Widening and Reconstruction of Jeffersonville Road from S.R. 3/Emery Hwy to Recreation Rd and Millerfield Rd from Jeffersonville Rd to Bristol Dr Bibb County, Georgia

1. INTRODUCTION

1.1 INTENT TO AWARD

The County intends to award to the overall lowest, responsive, and responsible Bidder; however, the County reserves the right to make multiple awards, awards based on lowest unit cost, or no award. Guidelines in the award of this contract will be Section 36-10-2.2, Official Code of Georgia Annotated. Upon award of the Contract, a pre-construction meeting will be held to discuss the project and establish a schedule of work.

1.1.1 Responsibility – The determination of the Bidder's responsibility will be made by the County based on whether the Bidder meets the following minimum standard requirements:

1.1.1.1 Has the appropriate and adequate technical experience required.

1.1.1.2 Has adequate personnel and equipment to perform the work expeditiously.

1.1.1.3 Able to comply with the required or proposed delivery and installation schedule.

1.1.1.4 Has a satisfactory record of performance.

1.1.1.5 The ability of the Bidder to provide future maintenance and/or service.

1.1.1.6 Has adequate financial means to meet obligations incidental to the work.

1.1.1.7 Such other factors as the County deem to be pertinent to either the bid or the contract.

1.1.2 Responsiveness – The determination of the Bidder's responsiveness will be made by the County based on a consideration of whether the Bidder has submitted complete bid documents meeting bid requirements without irregularities, exclusions, special conditions, or alternative bids for any item unless specifically requested in the solicitation.

1.2 SUB-CONSULTANTS AND SUB-CONTRACTORS

1.2.1 Bidder must ensure the responsibility standards for each of its Sub-Consultants and Sub-Contractors as listed below and in each and every part of this IFB. Verification must include documentation that each Sub-Consultant or Sub-Contractor meets the responsibility criteria required to perform the work including any professional license, certification, insurance requirements of this IFB, any governmental agency having jurisdiction over the matter, or any law or regulation pertaining to the work or requirements. Bidder must not furnish any statement, representation, or certification in connection with Sub-Consultants or Sub-Contractors that is materially false, deceptive, incorrect or incomplete. Failure of the Bidder to provide information concerning the responsibility of any

Sub-Consultant or Sub-Contractor may result in a finding that the Bidder is not responsible.

1.2.2 All proposed Sub-Consultants and Sub-Contractors must be listed in the Bidders response. Bidder must ensure that all proposed Sub-Contractors have adequate personnel, past experience, adequate facilities, finances and business systems to perform the Specifications. The County reserves the right to approve all Sub-Contractors and Sub-Consultants.

1.2.3 Bidder must have the responsibility of verifying the existence, authenticity, and dates of expiration of all licenses required by all Sub-Consultants and Sub-Contractors engaged in the work of this IFB. The lack of a valid license from the Bidder or any Sub-Consultant or Sub-Contractor shall be grounds for default, and for immediate termination for cause with prejudice as it relates to the Bidder, and the removal of any unlicensed entity from the project. In the event Bidder, a Sub-Consultant or Sub-Contractor is required to be licensed or certified as a condition precedent to providing goods or services under this IFB, the revocation or loss of such license or certification may result in immediate termination of the Bidder's agreement effective as of the date on which the license or certification is no longer in effect.

1.2.4 All Sub-Consultants and Sub-Contractors must be approved by the County prior to performing. Consultant must receive written permission to add Sub-Consultants or Sub-Contractors not initially submitted with Bidder's response. Sub-Consultants and Sub-Contractors shall not subcontract any portion of their work pursuant this IFB without the written consent of the County. Failure of the Bidder to obtain from the County prior approval of each Sub-Consultant or Sub-Contractor performing work on the project may result in suspension of work by that Sub-Contractor, removal of work performed by unapproved Sub-Contractor(s) and all permissible sanctions against the Bidder.

2. SCOPE OF WORK

Bidder shall provide the construction for the Widening and Reconstruction of Jeffersonville Road from S.R. 3/Emery Hwy to Recreation Road and Millerfield Rd from Jeffersonville Rd to Bristol Dr in Macon-Bibb County as specified in this IFB and Attachment A, Scope of Work, attached hereto and incorporated herein by reference.

3. MINIMUM REQUIREMENTS

3.1 Except as noted, this Project will follow current Georgia Department of Transportation (GDOT) State of Georgia Standard Specifications - Construction of Transportation Systems 2013 Edition, and the current version of the applicable Special Provisions (Specifications) along with the GDOT English Standards and Details for the Construction of Roadways and Bridges; all materials and workmanship associated with this Project shall meet GDOT Specifications for construction materials, methods and procedures for the construction of Roadways and Bridges. The Contractor shall use suppliers on the appropriate GDOT Qualified Products List (QPL).

3.2 A Pre-Construction conference will be held prior to any construction of the project. At a minimum, Sponsor, Contractor, selected DBE firms, GDOT Area Engineer, and the GDOT Project Manager are required to be present at this meeting.

3.3 The Bidder must be prequalified with the GDOT as a Prime Construction Contractor and have five (5) verifiable years of experience in construction of similar road projects in accordance with these specifications. All Sub-Contractor(s) proposed for this Project are also required to be prequalified with GDOT as a Sub-Contractor(s).

3.4 A County Construction Engineering Inspector (CEI) will be onsite for the duration of the construction activities. All communication from the Bidder will be directed to the CEI. The County's CEI will monitor and inspect the work as it progresses.

3.5 The Bidder must have an inspector who meets the requirements of a "Certified Person" by the Georgia Soil and Water Conservation Commission (GSWCC) Fundamentals Seminar Level IA assigned to the project.

3.6 The Bidder's project supervisor must have a minimum of one (1) year of experience directly related to work site traffic control and be certified as a Worksite Traffic Control Supervisor by the American Traffic Safety Services Association or equivalent national organization.

3.7 The Bidder shall be responsible for compliance with the National Pollutant Discharge Elimination System (NPDES) permit. This includes the filing of the Notice of Intent (NOI) and filing of the Notice of Termination (NOT).

3.8 Contractor shall obtain all permits and licenses, paying all fees as required, for execution of the Contract. In addition, the Contractor shall arrange for necessary inspections required by the City, County, State and other authorities having jurisdiction, and submit certificates of approval to the Owner or his designated representative.

2. PROJECT PLANS

The project construction plans are available from the County's website as a contract document. The County will furnish the successful Bidder one (1) full and one (1) half size set of plans. Any additional plans required by the Bidder should be purchased from ARC Document Solutions at no cost to the County.

APPENDIX A: CONTRACT COMPLIANCE REQUIREMENTS
GEORGIA DEPARTMENT OF TRANSPORTATION
DISADVANTAGED BUSINESS ENTERPRISE (DBE)

Bibb County in accordance with Title VI of the Civil Rights Act of 1964 and 78 Stat. 252, 42 USC 2000d—42 and Title 49, Code of Federal Regulations, Department of Transportation, Subtitle A, Office of the Secretary, part 21, Nondiscrimination in Federally Assisted Programs of the Department of Transportation issued pursuant to such Act, hereby notifies all Bidders that it will affirmatively ensure that in any contract entered into pursuant to this advertisement, minority business enterprises will be afforded full opportunity to submit bids in response to this invitation and will not be discriminated against on the grounds of race, color, sex, or national origin in consideration for an award.

DISADVANGED BUSINESS ENTEPRISE (DBE) Program

Bibb County will adhere to the Georgia Department of Transportation (GDOT) policy for the Disadvantaged Business Enterprise (DBE) Program. Macon-Bibb County will ensure that Bidder follow the rules of the DBE Program and that Bidder is in compliance with Title VI of the Civil Rights Act of 1964, 49 Code of Federal Register, Part 26. The DBE Program is in place to promote full and open competition in all government procurement and purchasing. Goals for participation of Disadvantaged Business Enterprises (DBE's) are set for specific NIGP codes on a contract by contract basis for each specific prime contract with subcontracting possibilities. Macon-Bibb County wants to encourage Bidders to utilize small, minority or woman-owned businesses whenever possible. All forms included in this section must be completed for a Bidder to be considered responsive.

All Bidders are required to complete a Covenant of Non-Discrimination wherein they promise not to engage in discriminatory conduct and to adopt the County's and GDOT's Equal Opportunity Policies. The County also wishes to ensure that DBEs have an equitable opportunity to compete for contracts and subcontracts. DBE goals are set on a project by project basis for contracts with subcontracting possibilities. Detailed information on the program is contained in this Appendix A. **This Project has a DBE goal of eleven percent (11%)**. All Bidders must complete all required forms in Appendix A in order to be considered responsive. The County will use the information contained on the form for recordkeeping purposes and to track the utilization of disadvantaged businesses.

DBE GOALS

VENDOR ID : BIDDER'S COMPANY NAME:

PROJECT NO. & COUNTY: **STP00-3223-00(002) Bibb**
STP00-3223-00(004) Bibb
BRMLB-3223(6) Bibb

IFB NO : **18-026-CW** LET DATE: _____**, 2018** TOTAL BID: _____

THE REQUIRED DBE GOAL ON THIS CONTRACT IS: **11%**

I PROPOSE TO UTILIZE THE FOLLOWING DBE'S:

LIST OF DBE PARTICIPANTS

*VENDOR NUMBER	DBE NAME/ ADDRESS (CITY, STATE)	TYPE OF WORK	RACE Neutral	Race Conscious	*WORK CODE	AMOUNT
					TOTAL	

*** For Departmental use only. Do not fill in Work codes.**

PLEASE NOTE: Only 60% of the participation of a DBE Supplier who does not manufacture or install the product will be counted toward the goal. See below for further instructions.

INSTRUCTIONS FOR LIST OF DBE PARTICIPANTS

If a DBE Goal is indicated, you must propose to achieve a goal that is equal or greater than the percentage required. If no goal is indicated, you may propose your own goal.

The DBE Firms to be utilized as counting toward the proposed goal must be listed on this form, along with their addresses, type of work and the amount to be paid to each of the minority firms. The amount entered will not necessarily be the contract amount, but must be the actual amount that will be paid to the DBE firm. In the case of a DBE supplier, the amount paid and 60% of that amount both will be entered; and only the 60% figure should be added to the total. An example of this is shown in the example chart:

Vendor Number	Company Name And Address (City and State)	Type of Work	* Work Code	Race Neutral	Race Conscious	Amount
	ABC Oil Company Atlanta, GA	Diesel Fuel Supplier				$80.000.00 (60% = $48,000.00)

* For Departmental use ONLY. Do not fill in Work Codes.

The Contractor shall indicate for each DBE and Type of Work whether the DBE Participant is Race Neutral or Race Conscious by placing a checkmark in the appropriate column.

PLEASE NOTE: For 60% of the amount paid to a DBE supplier to be eligible to count toward fulfilling the DBE goal, the supplier must be an established “regular dealer” in the product involved, and not just a broker. A “regular dealer” would normally sell the product to several customers and would usually have product inventory on hand.

STATE OF GEORGIA DEPARTMENT OF TRANSPORTATION

CONSTRUCTION CONTRACTORS
BID OPPORTUNITY LIST

FORM EEOP
PREQUALIFICATION OFFICE
Revised 05/16/11

Please complete and mail or FAX to:
Construction Bidding Administration
600 West Peachtree Street, NW
Suite 1113
Atlanta, Georgia 30308
TELEPHONE: (404) 631-1147
FAX: (404) 631-1275

This information shall be submitted in accordance with Specification Section 102.18

Prime Contractor/Consultant: _____
Address/Telephone Number: _____
Bid/Proposal Number: _____
Quote Submitted MM/YY: _____

49 CRF Part 26.11 requires the Georgia Department of Transportation to develop and maintain a "bid opportunity list". The list is intended to be a listing of all firms participating or attempting to participate, on DOT assisted contracts. The list must include all firms that bid on prime contracts, or bid or quote subcontracts and materials supplies on DOT-assisted projects, including both DBEs and non-DBEs. For consulting companies this list must include all subconsultants contacting you and expressing an interest in teaming with you on a specific DOT assisted project. Prime contractors and consultants must provide information for Nos. 1, 2, 3, and 4 and must provide information they have available on Numbers 5, 5.A.6, 7 , 8 and 9 for themselves, and their subcontractors and subconsultants.

1. Federal Tax ID Number: _____
2. Firm Name: _____
3. Phone: _____
4. Address: _____

_____

5. Contact _____
5.A. Company E mail address _____

6. ☐ DBE
   ☐ Non-DBE
7. ☐ Subcontractor
8. ☐ Subconsultant
9. ☐ Supplier

---

1. Federal Tax ID Number: _____
2. Firm Name: _____
3. Phone: _____
4. Address: _____

_____

5. Contact _____
5.A. Company E mail address _____

6. ☐ DBE
   ☐ Non-DBE
7. ☐ Subcontractor
8. ☐ Subconsultant
9. ☐ Supplier

---

1. Federal Tax ID Number: _____
2. Firm Name: _____
3. Phone: _____
4. Address: _____

_____

5. contact _____
5.A. Company E mail address _____

6. ☐ DBE
   ☐ Non-DBE
7. ☐ Subcontractor
8. ☐ Subconsultant
9. ☐ Supplier

Revised: December 7, 2009
Revised: October 21, 2013
Revised: November 3, 2014

DEPARTMENT OF TRANSPORTATION

STATE OF GEORGIA

DISADVANTAGED BUSINESS ENTERPRISE PROGRAM

CRITERIA FOR ACCEPTABILITY

The purpose of this special provision is to establish criteria for acceptability of DBE firms for work performed on this contract. The intent is to ensure all participation counted toward fulfillment of the DBE goals is (1) real and substantial, (2) actually performed by viable, independent DBE owned firms, and (3) in accordance with the spirit of the applicable laws and regulations.

The policy of the Georgia Department of Transportation is to ensure compliance with Title VI of the Civil Rights Act of 1964, 49 Code of Federal Regulations, Part 26 and related statutes and regulations in all program activities.

To this end the Georgia Department of Transportation shall not discriminate on the basis of race, color, sex or national origin in the award, administration and performance of any Georgia Department of Transportation assisted contract or in the administration of its Disadvantaged Business Enterprise Program. The Georgia Department of Transportation shall take all necessary and reasonable steps to ensure nondiscrimination.

DBE payments and commitments for Federal-aid projects shall be separate and distinct and cannot be transferred or combined in any matter.

The DBE Goal specified in the contract will be a percentage representing the DBE Race Conscious Participation. The Contractor will strive to achieve an additional percentage in his/her contracts for all projects during the course of the current State Fiscal Year, in order to meet the overall Georgia Department of Transportation DBE goal.

DBE DIRECTORY: The Department has available a directory or source list to facilitate identifying DBEs with capabilities relevant to general contracting requirements and to particular solicitations. The Department will make the directory available to bidders and proposers in their efforts to meet the DBE requirements. The directory or listing includes firms which the Department has certified to be eligible DBEs in accordance with 49 CFR Part 26.

GOAL FOR PARTICIPATION: If a percentage goal for DBE participation in this contract is set forth elsewhere in this proposal, the Contractor shall complete the DBE GOALS Form included in the proposal. The Contractor is encouraged to make every effort to achieve the goal set by the Department. However, if the Contractor cannot find sufficient DBE participants to meet the goal established by the Department, the Department will consider for award a proposal with less participation than the established goal if:

(A) The bidder can demonstrate no greater participation could be obtained. This should be well documented by demonstrating the Contractor's actions through good faith efforts. The following is a list of types of actions which the Department will consider as part of the Contractor's good faith efforts to obtain DBE participation. This is not intended to be a mandatory checklist nor intended to be exclusive or exhaustive. Other factors or types of efforts may be relevant in appropriate cases.

(1) Soliciting through all reasonable and available means (e.g. attendance at pre-bid meetings, advertising and/or written notices) the interest of all certified DBEs who have the capability to perform the work of the contract. The Contractor must solicit this interest within sufficient time to allow the DBEs to respond to the solicitation. The Contractor must determine with certainty if the DBEs are interested by taking appropriate steps to follow up initial solicitations.

(2) Selecting portions of the work to be performed by DBEs in order to increase the likelihood the DBE goals will be achieved. This includes, where appropriate, breaking out contract work items into economically feasible units to facilitate DBE participation, even when the Contractor might otherwise prefer to perform these work items with its own forces.

(3) Providing interested DBEs with adequate information about the plans, specifications, and requirements of the contract in a timely manner to assist DBEs participants in responding to a solicitation.

(4) (a) Negotiating in good faith with interested DBEs.

Contractor(s) are responsible to make a portion of the work available to DBE subcontractors and suppliers and to select those portions of the work or material needs consistent with the available DBE subcontractors and suppliers, so as to facilitate DBE participation. Evidence of such negotiation includes the names, addresses, and telephone numbers of DBEs that were considered; a description of the information provided regarding the plans and specifications for the work selected for subcontracting; and evidence as to why additional agreements could not be reached for DBEs to perform the work.

(b) Contractor(s) using good business judgment would consider a number of factors in negotiating with subcontractors, including DBE subcontractors, and would take a firm's price and capabilities as well as contract goals into consideration. However, the fact there may be some additional costs involved in finding and using DBEs is not in itself sufficient reason for a bidder's failure to meet the contract DBE goal, as long as such costs are reasonable. Also, the ability or desire of a Contractor to perform the work of a contract with its own organization does not relieve the Contractor of the responsibility to make good faith efforts. Contractors are not, however, required to accept higher quotes from DBEs if the price difference is excessive or unreasonable.

(5) Not rejecting DBEs as being unqualified without sound reasons based on a thorough investigation of their capabilities. The Contractor's standing within its industry, membership in specific groups, organizations, or associations and political or social affiliations (for example union vs. nonunion employee status) are not legitimate causes for the rejection or non-solicitation of bids in the Contractor's efforts to meet the project goal.

(6) Making efforts to assist interested DBEs in obtaining bonding, lines of credit, or insurance as required by the contractor.

(7) Making efforts to assist interested DBEs in obtaining necessary equipment, supplies, materials, or related assistance or services.

(8) Effectively using the services of available minority/women community organizations; minority/women Contractors' groups; local, state, and Federal minority/women business assistance offices; and other organizations as allowed on a case-by-case basis to provide assistance in the recruitment and placement of DBE's.

(B) The participation proposed by the low bidder is not substantially less than the participation proposed by the other bidders on the same contract.

If no percentage goal is set forth in the proposal, the contractor may enter a proposed DBE participation. This voluntary DBE participation will count as race neutral DBE participation. Prime Contractor shall report race-neutral participation in accordance with the DBE Monthly Report requirements shown in this document.

To be eligible for award of this contract, all bidders will be required to submit the following information to the Department by the close of business on the 3rd working day following opening of the bid as a matter of bidder responsibility.

i. The names and addresses of DBE firms committed to participate in the Contract;
ii. A description of the work each DBE will perform; The Contractor shall provide information with their bid showing that each DBE listed by the Contractor is certified in the NAICS code(s) for the kind of work the DBE will be performing.
iii. The dollar amount of participation for each DBE firm participating; Written documentation of the bidder's commitment to use a DBE subcontractor whose participation it submits to meet a contract goal;
iv. Written confirmation from the DBE committed to participating in the contract, as provided in the prime contractor's commitment.
v. If the contract goal is not met, evidence of good faith efforts must be provided.

Failure by a bidder to furnish the above information may subject the bid to disqualification. Also failure by the bidder to submit satisfactory evidence of good faith efforts may subject the bid to disqualification.

Award of a contract by the Department to a Prime Contractor who has listed DBE participants with the bid may not constitute final approval by the Department of the listed DBE. The Department reserves the right to approve or disapprove a Disadvantaged firm after a review of the Disadvantaged firm's proposal participation. Payment to the Contractor under the contract may be withheld until final approval of the listed DBEs is granted by the Department.

If the Contractor desires to substitute a DBE in lieu of those listed in the proposal, a letter of concurrence shall be required from the listed DBE prior to approval of the substitution, unless this requirement is waived by the Department.

Agreements between bidder and a DBE in which promises not to provide Subcontracting quotations to other bidders are prohibited.

DEFINITION: For the purposes of this provision, the following definitions will apply:
Disadvantaged Business Enterprise or DBE means a for-profit small business concern –

(1) Ensuring at least 51 percent owned by one or more individuals who are both socially and economically disadvantaged or, in the case of a corporation, in which 51 percent of the stock is owned by one or more such individuals; and
(2) Whose management and daily business operations are controlled by one or more of the socially and economically disadvantaged individuals who own the business.

Good Faith Efforts means efforts to achieve a DBE goal or other requirement of this part which, by their scope, intensity, and appropriateness to the objective, can reasonably be expected to fulfill the program requirement.

Joint Venture means an association of a DBE firm and one or more other firms to carry out a single, for-profit business enterprise, for which the parties combine their property, capital, efforts, skills and knowledge, and in which the DBE is responsible for a distinct, clearly defined portion of the work of the contract and whose share in the capital contribution, control, management, risks, and profits of the joint venture are commensurate with its ownership interest.

Socially and Economically Disadvantaged Individual means any individual who is a citizen (or lawfully admitted permanent resident) of the United States and who is –

(1) Any individual who the Department finds to be a socially and economically disadvantaged individual on a case-by-case basis.

(2) Any individual in the following groups, members of which are reputably presumed to be socially and economically disadvantaged.

(i) "Black Americans," which includes persons having origins, in any of the Black racial groups of Africa;

(ii) "Hispanic Americans," which includes persons of Mexican, Puerto Rican, Cuban, Dominican, Central or South American, or other Spanish or Portuguese culture or origin, regardless of race;

(iii) "Native Americans," which includes persons who are American Indians, Eskimos, Aleuts, or Native Hawaiians;

(iv) "Asian-Pacific Americans," which includes persons whose origins are from Japan, China, Taiwan, Korea, Burma (Myanmar), Vietnam, Laos, Cambodia (Kampuchea), Thailand, Malaysia, Indonesia, the Philippines, Brunei, Samoa, Guam, the U.S. Trust Territories of the Pacific Islands (Republic of Palau), the Commonwealth of the Northern Marianas Islands, Macao, Fiji, Tonga, Kiribati, Juvalu, Nauru, Federated States of Micronesia, or Hong Kong;

(v) "Subcontinent Asian Americans," which includes persons whose origins are from India, Pakistan, Bangladesh, Bhutan, the Maldives Islands, Nepal or Sri Lanka;

(vi) Women;

(vii) Any additional groups whose members are designated as socially and economically disadvantaged by the SBA, at such time as the SBA designation becomes effective.

(3) GDOT will presume that such persons are socially and economically disadvantaged only to the extent permitted by applicable federal law.

Race-conscious measure is one focused specifically on assisting only DBEs, including women- owned

DBEs.

Race-neutral measure is one being, or can be, used to assist all small businesses. For the purposes of this part, race-neutral includes gender-neutrality.

DISCRIMINATION PROHIBITED: No person shall be excluded from participation in, denied the benefits of, or otherwise discriminated against in connection with the award and performance of this contract on the grounds of race, color, sex or national origin.

The following assurance becomes a part of this contract and must be included in and made a part of each subcontract the prime contractor enters into with their subcontractors (49 CFR 26.13):

> "The contractor, and/or subcontractor shall not discriminate on the basis of race, color, national origin, or sex in the performance of this contract. The contractor shall carry out applicable requirements of 49 CFR Part 26 in the award and administration of DOT – assisted contracts. Failure by the contractor to carry out these requirements is (breach) of this contract which may result in the termination of this contract or such other remedy as the Department deems appropriate".

Failure to Achieve Requirements: Periodic reviews shall be made by the Department to determine the extent of compliance with the requirements set forth in this provision. If the Contractor is found to be in noncompliance, further payments for any work performed may be withheld until corrective action is taken. If corrective action is not taken, it may result in termination of this contract. During the life of the contract, the contractor will be expected to demonstrate good faith efforts at goal attainment as provided by 49 CFR 26.

The contractor shall utilize the specific DBEs listed to perform the work and supply the materials for which each is listed unless the contractor obtains the Department's written consent to substitute and, unless the Department's consent is provided the contractor shall not be entitled to any payment for work or material unless it is performed or supplied by the listed DBE.

Participation will be counted toward fulfillment of the DBE goal as follows:

(A) When a DBE participates in a contract, the Contractor counts only the value of the work actually performed by the DBE toward DBE goals.

(1) Count the entire amount of the portion of a construction contract (or other contract not covered by paragraph (A) (2) of this section) performed by the DBE's own forces. Include the cost of supplies and materials obtained by the DBE for the work of the contract, including supplies purchased or equipment leased by the DBE (except supplies and equipment the DBE subcontractor purchases or leases from the prime contractor or its affiliate).

(2) Count the entire amount of fees or commissions charged by a DBE firm for providing a bona fide service, such as professional, technical consultant, or managerial services, or for providing bonds or insurance specifically required for the performance of a DOT-assisted contract, toward DBE goals, provided the Department determines the fee is reasonable and not excessive as compared with fees customarily allowed for similar services.

(3) When a DBE subcontracts part of the work of its contract to another firm, the value of the subcontracted work may be counted toward DBE goals only if the DBE's subcontractor is itself a DBE. Work that a DBE subcontracts to a non-DBE firm does not count toward DBE goals.

(B) When a DBE performs as a participant in a joint venture, count a portion of the total dollar value of the contract equal to the distinct, clearly defined portion of the work of the contract the DBE performs with own forces toward DBE goals.

(C) Count expenditures to a DBE contractor toward DBE goals only if the DBE is performing a commercially useful function on that contract.

(1) A DBE performs a commercially useful function when responsible for execution of the work of the contract and carrying out responsibilities by actually performing, managing, and supervising the work involved. To perform a commercially useful function, the DBE must also be responsible, with respect to materials and supplies used on the contract, for negotiating price, determining quality and quantity, ordering the material, and installing (where applicable) and paying for the material itself.

(2) A DBE does not perform a commercially useful function if their role is limited to being an extra participant in a transaction, contract, or project through which funds are passed in order to obtain the appearance of DBE participation.

(3) If a DBE does not perform or exercise responsibility for at least 30 percent of the total cost of their contract with their own work force, or the DBE subcontracts a greater portion of the work of a contract than would be expected on the basis of normal industry practice for the type of work involved, the Department will presume the DBE is not performing a commercially useful function.

(4) When a DBE is presumed not to be performing a commercially useful function as provided in paragraph (C) (3) of this section, the DBE may present evidence to rebut this presumption.

(5) The Department's decisions on commercially useful function matters are subject to review by the US DOT, but are not administratively appealable to the US DOT.

(D) The following factors are to be used in determining whether a DBE trucking company is performing a commercially useful function:

(1) The DBE must be responsible for the management and supervision of the entire trucking operation for which they are responsible on a particular contract, and there cannot be a contrived arrangement for the purpose of meeting DBE goals.

(2) The DBE must itself own and operate at least one fully licensed, insured, and operational truck used on the contract.

(3) The DBE receives credit for the total value of the transportation services it provides on the contract using trucks it owns, insures, and operates using drivers it employs.

(4) The DBE may lease trucks from another DBE firm, including an owner / operator who is certified as a DBE. The DBE who leases trucks from another DBE receives credit for the total value of the transportation services the lessee DBE provided on the contract.

(5) The DBE may also lease trucks from a non-DBE and is entitled to credit only for the fee or commission it receives as a result of the lease arrangement. The DBE does not receive credit for the total value of the transportation services provided by the lessee, since these services are not provided by a DBE.

(6) For purposes of this paragraph (D), a lease must indicate the DBE has exclusive use of and control over the truck. This does not preclude the leased truck from working for others during the term of the lease with the consent of the DBE, so long as the lease gives the DBE absolute priority for use of the leased truck. Leased trucks must display the name and identification number of the DBE.

(E) Count expenditures with DBEs for materials or supplies toward DBE goals as provided in the following:

(1) (i) If the materials or supplies are obtained from a DBE manufacturer, count 100 percent of the cost of the materials or supplies toward DBE goals.
(ii) For purposes of this paragraph, a manufacturer is a firm that operates or maintains a factory or establishment that produces, on the premises, the materials, supplies, articles, or equipment required under the contract and of the general character described by the specifications.

(2) (i) If the materials or supplies are obtained from a DBE regular dealer, count 60 percent of the cost of the materials or supplies toward DBE goals. (ii) For purposes of this section, a regular dealer is a firm owning, operating, or maintaining a store, warehouse, or other establishment in which the materials, supplies, articles or equipment of the general character described by the specifications and required under the contract are bought, kept in stock, and regularly sold or leased to the public in the usual course of business.

(A) To be a regular dealer, the firm must be an established, regular business engaging, as its principal business and under its own name, in the purchase and sale or lease of the products in question.

(B) A person may be a regular dealer in such bulk items as petroleum products, steel, cement, gravel, stone, or asphalt without owning, operating, or maintaining a place of business as provided in this paragraph **(E)(2)(ii)** if the person both owns and operates distribution equipment for the products. Any supplementing of regular dealers' own distribution equipment shall be by a long-term lease agreement and not

on an ad hoc or contract-by-contract basis.

(C) Packagers, brokers, manufacturers' representatives, or other persons who arrange or expedite transactions are not regular dealers within the meaning of this paragraph **(E)(2).**

(3) With respect to materials or supplies purchased from a DBE which is neither a manufacturer nor a regular dealer, count the entire amount of fees or commissions charged for assistance in the procurement of the materials and supplies, or fees or transportation charges for the delivery of materials or supplies required on a job site, toward DBE goals, provided you determine the fees to be reasonable and not excessive as compared with fees customarily allowed for similar services. Do not count any portion of the cost of the materials and supplies themselves toward DBE goals, however.

(4) You must determine the amount of credit awarded to a firm for the provision of materials and supplies (e.g., whether a firm is acting as a regular dealer or a transaction expediter) on a contract-by-contract basis. Do not count the participation of a DBE subcontractor toward the prime contractor's DBE achievements until the amount being counted toward the goal has been paid to the DBE.

(5) No participation will be counted not in compliance with Special Provision entitled "Criteria for Acceptability" which is a part of this contract or with any provisions included in 49 CFR Part 26.

(6) If the contract amount overruns, the contractor will not be required to increase the dollar amount of DBE participation. If the contract amount under runs, the contractor will not be allowed to under run the dollar amount of DBE participation except when the DBE subcontracted items themselves under run.

REPORTS

A. The contractor shall submit a "DBE Participation Report" on this contract monthly which shall include the following:

1. The name of each DBE participating in the contract.

2. A description of the work to be performed, materials, supplies, and services provided by each DBE.

3. Whether each DBE is a supplier, subcontractor, owner/operator, or other.

4. The dollar value of each DBE subcontract or supply agreement.

5. The actual payment to date of each DBE participating in the contract.

6. The report shall be updated by the Prime Contractor whenever the approved DBE has performed a portion of the work that has been designated for the contract. Copies of this report should be transmitted promptly to the Engineer. Failure to submit the report within 30 calendar days following the end of the month may cause payment to the contractor to be withheld.

7. The Prime Contractor shall notify the Project Engineer at least 24 hours prior to the time the DBE commences working on the project. The DBE must furnish supervision of the DBE portion of the work, and the person responsible for this supervision must report to the Project Engineer when they begin work on the project. They must also inform the Project Engineer when their forces will be doing work on the project.

B. In order to comply with 49 CFR 26.11, the Prime Contractor shall submit documentation regarding all payments made from the Prime to all DBE subcontractors on federal aid projects in the form of copies of cancelled checks or notarized electronic documentation which validates said payments made on the DBE Monthly Participation Reports. This information shall be required monthly and submitted with the DBE Monthly Participation Report.

C. Failure to respond within the time allowed in the request will be grounds for withholding all payments on all Contracts.

SUBSTITUTION OF DBEs: The Contractor shall make reasonable efforts to replace a DBE Subcontractor unable to perform work for any reason with another DBE. The Department shall approve all substitutions of Subcontractors in order to ensure the substitute firms are eligible DBEs.

When a DBE subcontractor is terminated, or fails to complete its work on the contract for any reason, the prime contractor must make good faith efforts to find another DBE subcontractor to substitute for the original DBE. These good faith efforts shall be directed at finding another DBE to perform at least the same amount of work under the contract as the DBE that was terminated, to the extent needed to meet the contract goal. The good faith efforts shall be documented by the contractor. If the recipient requests documentation under this provision, the contractor shall submit the documentation within 7 days, which may be extended for an additional 7 days if necessary at the request of the contractor, and the recipient shall provide a written determination to the contractor stating whether or not good faith efforts have been demonstrated.

CERTIFICATION OF DBEs: To ensure the DBE Program benefits only firms owned and controlled by Disadvantaged Individuals, the Department shall certify the eligibility of DBEs and joint ventures involving DBEs named by bidders.

Questions concerning DBE Certification/Criteria should be directed to the EEO Office at (404) 631-1972.

Covenant of Non-Discrimination Form

I, _____(name, title), on behalf _____

(company), by my signature below, do hereby promise:

1. to adopt the policies of Macon-Bibb County relating to equal opportunity in contracting on projects and contracts funded, in whole or in part, with funds of Macon-Bibb County Government;
2. not to otherwise engage in discriminatory conduct;
3. to provide a discrimination-free working environment;
4. that this Covenant of Non-Discrimination shall be continuing in nature and shall remain in full force and effect without interruption; and
5. that this Covenant of Non-Discrimination shall be incorporated by reference into any contract or portion thereof which we may hereafter obtain.

We understand that our failure to satisfactorily discharge any of the promises of non-discrimination as made and set forth herein shall constitute a material breach of contract.

_____
Signature

_____
Name and Title (typed or printed)

Subscribed and sworn before me this _____ day of _____, 20___.

_____
Notary Public

My Commission Expires_____

Seal

APPENDIX B: BONDING AND INSURANCE REQUIREMENTS

A. Bonding Requirements

1. The Bidders shall post a bid bond, certified check or money order made payable to the County in the amount of five percent (5%) of the bid price.

2. Whenever a bond is provided, it shall be executed by a Surety licensed to write surety insurance in the State of Georgia.

3. The Bidder shall give an Agreement Performance bond and a payment bond, post a payment bond of one hundred ten percent (110%) of the bid price and a Performance bond of one hundred percent (100%) of the bid price, for the use of all persons doing work or furnishing skills, tools, machinery, or materials under or for the purpose of the resulting Agreement, in accordance with the applicable provisions of Georgia state law, including but not limited to, O.C.G.A. § 13-10-1 and § 36-91-21 et seq. The life of these bonds shall extend through the life of the Agreement including a sixty (60) day maintenance period (where applicable) and a twelve month (12) guarantee period after the completion of Work performed under the resulting Agreement.

4. It is further agreed between the parties hereto that if at any time after the execution of the Agreement and the surety bonds, the County shall deem the surety or sureties upon such bonds to be unsatisfactory, or if, for any reason, such bonds cease to be adequate to cover the performance of the Work, the Bidder shall, at its sole expense and within five (5) days after the receipt of notice from the County to do so, furnish additional bond or bonds in such form and amount and with such surety or sureties as shall be satisfactory to the County.

5. The surety and insurance companies must be acceptable to the Owner. The bidder shall require the attorney in fact who executes the required bonds on behalf of the surety to affix thereto a certified and current copy of his power of attorney indicating the monetary limit of such power.

B. Insurance Requirements

The following requirements shall apply to all work under the Agreement. Compliance is required by all Contractors/Consultants. To the extent permitted by applicable law, Macon-Bibb County ("County") reserves the right to adjust or waive any insurance requirements contained in this Appendix B and applicable to the agreement.

1. Evidence of Insurance Required Before Work Begins

   No work under the Agreement may be commenced until all insurance requirements contained in this Appendix B, or required by applicable law, have been complied with and evidence of such is compliance satisfactory to County as to form and content and has been filed with County. Contractor/Consultant must provide County with a Certificate of Insurance and Endorsements that clearly and unconditionally indicate that Contractor/Consultant has complied with all insurance requirements set forth in this Appendix B and applicable to the agreement. If the Contractor/Consultant is a joint venture, the insurance certificate should name the joint venture, rather than the joint venture partners individually, as the primary insured**.** In accordance with the solicitation documents applicable to the agreement at the time Contractor/Consultant submits to County its executed agreement, Contractor/Consultant must satisfy all insurance requirements required by this Appendix B and applicable by law, and provide the required written documentation to County evidencing such compliance. In the event that

Contractor/Consultant does not comply with such submittal requirements within the time period established by the solicitation documents applicable to the Agreement, County may, in addition to any other Rights County may have under the solicitation documents applicable to the Agreement or under applicable law, make a claim against any bid security provided by Contractor/Consultant.

2. Minimum Financial Security Requirements

All companies providing insurance required by this Appendix B must meet certain minimum financial security requirements. These requirements must conform to the ratings published by A.M. Best & Co. in the current Best's Key Rating Guide - Property-Casualty. The ratings for each company must be indicated on the documentation provided by Contractor/Consultant to County certifying that all insurance requirements set forth in this Appendix B and applicable to the Agreement have been unconditionally satisfied.

For all Agreements, regardless of size, companies providing insurance or bonds under the agreement must meet the following requirements:

2.1 Best's Rating not less than A-VII,

2.2 Best's Financial Size Category not less than Class VII, and

2.3 Companies must be authorized to conduct and transact insurance contracts by the Insurance Commissioner, State of Georgia.

2.4 All bid, performance and payment bonds must be underwritten by a U.S. Treasury Circular 570 listed company.

If the issuing company does not meet these minimum requirements, or for any other reason is or becomes unsatisfactory to County, County will notify Contractor/Consultant in writing. Contractor/Consultant must promptly obtain a new policy or bond issued by an insurer acceptable to County and submit to County evidence of its compliance with these conditions.

Contractor/Consultant's failure to comply with all insurance minimum requirements set forth in this Appendix B and applicable to the Agreement will not relieve Contractor/Consultant from any liability under the Agreement. Contractor/Consultant's obligations to comply with all insurance requirements set forth in Appendix B and applicable to the Agreement will not be construed to conflict with or limit Contractor/Consultant's indemnification obligations under the Agreement.

3. Insurance Required for Duration of Contract

All insurance required by this Appendix B must be maintained during the entire term of the agreement, including any renewal or extension terms, and until all work has been completed to the satisfaction of the County. If Bibb County shall so request, the Contractor/Consultant will furnish the County for its inspection and approval such policies of insurance with all endorsements, or confirmed specimens thereof certified by the insurance company to be true and correct copies.

4. Notices of Cancellation & Renewal

Contractor/Consultant must, notify Bibb County in writing at the address listed below by mail, hand-delivery or facsimile transmission, within 2 days of any notices received from any insurance carriers providing insurance coverage under this Agreement and Appendix B that concern the proposed cancellation, or termination of coverage.

Macon-Bibb County
Procurement Department
Suite 308, Government Center
700 Popular Street
Macon, GA 31201

Confirmation of any mailed notices must be evidenced by return receipts of registered or certified mail.

Contractor/Consultant shall provide the County with evidence of required insurance prior to the commencement of this agreement, and, thereafter, with a certificate and required endorsements evidencing renewals or changes to required policies of insurance at least fifteen (15) days prior to the expiration of previously provided certificates.

5. Agent Acting as Authorized Representative

Each and every agent acting as Authorized Representative on behalf of a company affording coverage under this contract shall warrant when signing the Certificate of Insurance that specific authorization has been granted by the Companies for the Agent to bind coverage as required and to execute the Certificates of Insurance as evidence of such coverage. Macon-Bibb County coverage requirements may be broader than the original policies; these requirements have been conveyed to the Companies for these terms and conditions.

In addition, each and every agent shall warrant when signing the Accord Certificate of Insurance that the Agent is licensed to do business in the State of Georgia and that the Company or Companies are currently in good standing in the State of Georgia.

6. Certificate Holder

Macon-Bibb County Board of Commission, 700 Popular Street, Macon, GA 31201, must be named as certificate holder.

All notices must be mailed to the attention of **Procurement Department** at **Suite 308, 700 Popular Street, Macon, GA 31201.**

7. IFB #18-026-CW Widening and Reconstruction of Jeffersonville Road from S.R. 3/Emery Hwy to Recreation Rd and Millerfield Rd from Jeffersonville Rd to Bristol Dr in Macon-Bibb County, Georgia. The project number and name may be referenced in the description section of the insurance certificate.

8. Additional Insured Endorsements Form CG 20 26 07 04 or equivalent

The County must be covered as Additional Insured under all insurance (except Worker's Compensation and Professional Liability) required by this Appendix B and such insurance must be primary with respect to the Additional Insured. Contractor/Consultant must submit to County an Additional Insured Endorsement evidencing County's rights as an Additional Insured for each policy of insurance under which it is required to be an additional insured pursuant to this Appendix B. Endorsement must not exclude the Additional Insured from Products - Completed Operations coverage. The County shall not have liability for any premiums charged for such coverage. The Endorsement must include the following verbiage: "Macon-Bibb County, GA, its appointed and elected Officials, departments, agencies, boards, commissions, officers, agents, employees and volunteers as additional insureds with respect to liability arising out of the activities performed by or on behalf of the Contractor/Consultant."

9. Waiver of Subrogation Endorsement

The Workers' Compensation policy must contain a Waiver of Subrogation Endorsement in favor of Macon-Bibb County including the following verbiage, "Macon-Bibb County, GA, its appointed and elected Officials, departments, agencies, boards, commissions, officers, agents, employees and volunteers for losses arising from work performed by or on behalf of the Contractor/Consultant."

10. Mandatory Sub-Contractor/Consultant Compliance

It is the sole responsibility of the general Contractor/Consultant to ensure all Sub-Contractors/Consultants working under the general Contractor/Consultant have separately procured any and all types and limits of insurance that is required under any and all pertinent

local, state, federal, ordinances or resolutions that are suitable for the particular trade that the sub-Contractor/Consultant is performing. It is also the sole responsibility of the general and/or prime Contractor/Consultant to ensure any and all sub-Contractor/Consultant or vendors carry types and limits of insurance not less than those listed herein and that the Sub-Contractor/Consultant and/or vendors carry and/or procure endorsements to waive all subrogation rights against and name "Macon-Bibb County, GA, its appointed and elected Officials, departments, agencies, boards, commissions, its officers, agents, employees and volunteers" as additional insureds per this Appendix B.

The contract created by the award to the Bidder shall not be sold, not be assigned or transferred, in whole or any part hereof, by Bidder by process or operation of law or in any other manner whatsoever, including intra-corporate transfers or reorganizations between or among a subsidiary of Bidder, or with a business entity which is merged or consolidated with Bidder or which purchases a majority or controlling interest in the ownership or assets of Bidder without the prior written consent of County.

11. Self- Insured Retentions, Deductibles or Similar Obligations

Any self-insured retention, deductible or similar obligation will be the sole responsibility of the Contractor/Consultant.

12. Task Order

Evidence of compliance with insurance requirements must be provided on a Task Order basis prior to the issuance of any Notice to Proceed. Additional Insurance Requirements may be mandatory for particular Task Orders as required.

13. Coverage Limits

Coverage provided by the Contractor/Consultant shall not be limited to the liability assumed under the indemnification provisions of the Contract.

14. Non-limitation on the Contractor's/Consultants Liability

The obligations for the Contractor/Consultant to procure and maintain insurance shall not be construed to waive or restrict other obligations and it is understood that insurance in no way limits liability of the Contractor/Consultant whether or not same is covered by insurance.

15. Use of Premises

The Contractor/Consultant shall confine its apparatus, material and the operations of its workers to limits/requirements indicted by law, ordinances, permits, codes and any restriction of Contractor/Consultant and shall not unreasonably encumber the premises with its materials or supplies.

C. Coverage Types and Limits

1. Workers' Compensation and Employer's Liability Insurance

Contractor/Consultant must procure and maintain Workers' Compensation and Employer's Liability Insurance in compliance with the applicable Workers' Compensation Act(s) of the state(s) wherein the work is to be performed or where jurisdiction could apply in amounts required by statutes in the following limits to cover each employee who is or may be engaged in work under the Agreement:

Workers' Compensation. . . . . **Statutory** Employer's Liability:

Bodily Injury by Accident/Disease **$1,000,000 each accident**

Bodily Injury by Accident/Disease **$1,000,000 each employee**

Bodily Injury by Accident/Disease **$1,000,000 policy limit**

2. Commercial General Liability Insurance

Contractor/Consultant must procure and maintain Commercial General Liability Insurance on form (CG 00 00 01 or equivalent) in an amount not less than $1,000,000 per occurrence subject to a $2,000,000 aggregate. The following is the minimum insurance and limits that the Contractor/Consultant must maintain. If the Contractor/Consultant maintains higher limits than the minimums shown below, County requires and shall be entitled to coverage for the higher limits maintained by the Contractor/Consultant. Any available insurance proceeds in excess of the specified minimum limits of insurance and coverage shall be available to County. The maximum deductible shall be $5000.00. The following indicated extensions of coverage must be provided:

2.1 Contractual Liability
2.2 Broad Form Property Damage
2.3 Medical Expense
2.4 Products – Completed Operations Aggregate
2.5 Personal and Advertising Injury
2.6 Premises Operations
2.7 Independent Contractor/Consultants/Sub-Contractor/Consultants
2.8 Explosion, Collapse and Underground (XCU) Liability
2.9 Additional Insured Endorsement* (primary & non-contributing in favor of Macon-Bibb County)
2.10 Water Damage.
2.11 Products and Completed Operations.
2.12 Any other type of liability for which this Agreement applies.

The Contractor is responsible for any and all deductibles.

It is the sole responsibility of the general Contractor/Consultant to ensure all subcontractors working under it have separately procured any and all types and limits of insurance that is required under any and all pertinent local, state, federal, ordinances or resolutions that is suitable for the particular trade that the sub-Contractor/Consultant is performing. It is also the sole responsibility of the general and/or prime Contractor/Consultant to ensure any and all subcontractors or vendors carry types and limits of insurance not less than those listed herein and that the subcontractors and/or vendors carry and/or procure endorsements to waive all subrogation rights against and name "Macon-Bibb County, GA, its appointed and elected Officials, departments, agencies, boards, commissions, its officers, agents, employees and volunteers" as additional insureds.

3. Commercial Automobile Liability Insurance

Contractor/Consultant must procure and maintain Automobile Liability Insurance in an amount not less than **$1,000,000** Bodily Injury and Property Damage combined single limit. The maximum deductible shall be $5000.00. The following indicated extensions of coverage must be provided:

Owned, Non-owned & Hired Vehicles

If Contractor/Consultant does not own any automobiles in the corporate name, non-owned vehicle coverage will apply and must be endorsed on either Contractor/Consultant's personal automobile policy or the Commercial General Liability coverage required under this

Appendix B.

4. Contractor/Consultant Pollution Liability Insurance

For losses caused by pollution conditions that arise from the operation of the Contractor as described in the Scope of Services section of this Contract.

Per Occurrence	$1,000,000
General Aggregate	$2,000,000

4.1 Coverage must be identified as specific to the operations as described in the Scope of Services in this Contract.

4.2 Pollution coverage must apply to all phases of the work described in the Scope of Services in this Contract.

4.3 The policy shall include coverage for bodily injury, sickness, disease, mental anguish or shock sustained by any person, including death.

4.4 The policy shall include coverage for property damage, and physical damage to or destruction of tangible property including the resulting loss off use thereof, cleanup cost, and the loss of use of tangible property that has not been physically damaged or destroyed.

4.5 The policy shall include defense to include costs, charges and expenses incurred in the investigation, adjustment or defense of claims for such compensatory damages.

5. Indemnification

Contractor/Consultant shall agree to indemnify, defend, save and otherwise hold harmless Macon-Bibb County, GA, its elected and appointed officials, departments, agencies, boards, authorities, directors, officers, employees, and volunteers against and/or from any and all lawsuits, claims, demands, liabilities, losses and expenses, including court costs, attorneys' fees and any other costs associated and/or related in any way to any claim or litigation for or on account of any property damage, injury or death to any person or action related to such brought by any person and/or estate which may arise or which may be alleged to have arisen out of or in connection with the work covered by this contract, except to the extent that such loss results from the negligence of Macon-Bibb County, GA. This indemnity provision shall include activities required for compliance with all applicable environmental laws, ordinances and regulations in effect during the term of this Agreement and continue for a period of two years after termination thereof. The successful Contractor/Consultant shall protect Macon-Bibb County from claims involving infringements of patents and/or copyrights. The unauthorized use of patented articles is done at the risk of the Contractor/Consultant. This indemnity includes any claim or amount arising out of or recovered under the Workers' Compensation laws of the State of Georgia or arising out of the failure of such vendor to conform to any federal, state or local law, statute, ordinance, rule, regulation or court decree. Contractor/Consultant shall be responsible for primary loss investigation, defense and judgment costs where this indemnification is applicable.

Contractor/Consultant shall agree to waive all rights of subrogation and/or financial recovery of any kind in favor of Macon-Bibb County, Georgia, its departments, all elected and appointed officials, to include, but not limited to, its commissioners, directors, officers, agents, boards, volunteers and employees for losses arising or alleged to have arisen out of any work performed in relation to the contract.

BALANCE OF PAGE INTENTIONALLY LEFT BLANK

APPENDIX C

REQUIRED FORM SUBMITTALS

Form **W-9**
(Rev. December 2014)
Department of the Treasury
Internal Revenue Service

Request for Taxpayer Identification Number and Certification

Give Form to the requester. Do not send to the IRS.

Print or type
See Specific Instructions on page 2.

1 Name (as shown on your income tax return). Name is required on this line; do not leave this line blank.

2 Business name/disregarded entity name, if different from above

3 Check appropriate box for federal tax classification; check only **one** of the following seven boxes:
☐ Individual/sole proprietor or single-member LLC ☐ C Corporation ☐ S Corporation ☐ Partnership ☐ Trust/estate
☐ Limited liability company. Enter the tax classification (C–C corporation, S–S corporation, P–partnership) ▶ _____
Note. For a single-member LLC that is disregarded, do not check LLC; check the appropriate box in the line above for the tax classification of the single-member owner.
☐ Other (see instructions) ▶

4 Exemptions (codes apply only to certain entities, not individuals; see instructions on page 3):
Exempt payee code (if any) _____
Exemption from FATCA reporting code (if any) _____
(Applies to accounts maintained outside the U.S.)

5 Address (number, street, and apt. or suite no.)

Requester's name and address (optional)

6 City, state, and ZIP code

7 List account number(s) here (optional)

Part I Taxpayer Identification Number (TIN)

Enter your TIN in the appropriate box. The TIN provided must match the name given on line 1 to avoid backup withholding. For individuals, this is generally your social security number (SSN). However, for a resident alien, sole proprietor, or disregarded entity, see the Part I instructions on page 3. For other entities, it is your employer identification number (EIN). If you do not have a number, see *How to get a TIN* on page 3.

Note. If the account is in more than one name, see the instructions for line 1 and the chart on page 4 for guidelines on whose number to enter.

Social security number
___ - ___ - ____

or

Employer identification number
__ - _____

Part II Certification

Under penalties of perjury, I certify that:

1. The number shown on this form is my correct taxpayer identification number (or I am waiting for a number to be issued to me); and
2. I am not subject to backup withholding because: (a) I am exempt from backup withholding, or (b) I have not been notified by the Internal Revenue Service (IRS) that I am subject to backup withholding as a result of a failure to report all interest or dividends, or (c) the IRS has notified me that I am no longer subject to backup withholding; and
3. I am a U.S. citizen or other U.S. person (defined below); and
4. The FATCA code(s) entered on this form (if any) indicating that I am exempt from FATCA reporting is correct.

Certification instructions. You must cross out item 2 above if you have been notified by the IRS that you are currently subject to backup withholding because you have failed to report all interest and dividends on your tax return. For real estate transactions, item 2 does not apply. For mortgage interest paid, acquisition or abandonment of secured property, cancellation of debt, contributions to an individual retirement arrangement (IRA), and generally, payments other than interest and dividends, you are not required to sign the certification, but you must provide your correct TIN. See the instructions on page 3.

Sign Here | **Signature of U.S. person** ▶ | **Date** ▶

General Instructions

Section references are to the Internal Revenue Code unless otherwise noted.

Future developments. Information about developments affecting Form W-9 (such as legislation enacted after we release it) is at *www.irs.gov/fw9*.

Purpose of Form

An individual or entity (Form W-9 requester) who is required to file an information return with the IRS must obtain your correct taxpayer identification number (TIN) which may be your social security number (SSN), individual taxpayer identification number (ITIN), adoption taxpayer identification number (ATIN), or employer identification number (EIN), to report on an information return the amount paid to you, or other amount reportable on an information return. Examples of information returns include, but are not limited to, the following:

- Form 1099-INT (interest earned or paid)
- Form 1099-DIV (dividends, including those from stocks or mutual funds)
- Form 1099-MISC (various types of income, prizes, awards, or gross proceeds)
- Form 1099-B (stock or mutual fund sales and certain other transactions by brokers)
- Form 1099-S (proceeds from real estate transactions)
- Form 1099-K (merchant card and third party network transactions)
- Form 1098 (home mortgage interest), 1098-E (student loan interest), 1098-T (tuition)
- Form 1099-C (canceled debt)
- Form 1099-A (acquisition or abandonment of secured property)

Use Form W-9 only if you are a U.S. person (including a resident alien), to provide your correct TIN.

If you do not return Form W-9 to the requester with a TIN, you might be subject to backup withholding. See *What is backup withholding?* on page 2.

By signing the filled-out form, you:

1. Certify that the TIN you are giving is correct (or you are waiting for a number to be issued),
2. Certify that you are not subject to backup withholding, or
3. Claim exemption from backup withholding if you are a U.S. exempt payee. If applicable, you are also certifying that as a U.S. person, your allocable share of any partnership income from a U.S. trade or business is not subject to the withholding tax on foreign partners' share of effectively connected income, and
4. Certify that FATCA code(s) entered on this form (if any) indicating that you are exempt from the FATCA reporting, is correct. See *What is FATCA reporting?* on page 2 for further information.

Cat. No. 10231X — Form **W-9** (Rev. 12-2014)

Note. If you are a U.S. person and a requester gives you a form other than Form W-9 to request your TIN, you must use the requester's form if it is substantially similar to this Form W-9.

Definition of a U.S. person. For federal tax purposes, you are considered a U.S. person if you are:

- An individual who is a U.S. citizen or U.S. resident alien;
- A partnership, corporation, company, or association created or organized in the United States or under the laws of the United States;
- An estate (other than a foreign estate); or
- A domestic trust (as defined in Regulations section 301.7701-7).

Special rules for partnerships. Partnerships that conduct a trade or business in the United States are generally required to pay a withholding tax under section 1446 on any foreign partners' share of effectively connected taxable income from such business. Further, in certain cases where a Form W-9 has not been received, the rules under section 1446 require a partnership to presume that a partner is a foreign person, and pay the section 1446 withholding tax. Therefore, if you are a U.S. person that is a partner in a partnership conducting a trade or business in the United States, provide Form W-9 to the partnership to establish your U.S. status and avoid section 1446 withholding on your share of partnership income.

In the cases below, the following person must give Form W-9 to the partnership for purposes of establishing its U.S. status and avoiding withholding on its allocable share of net income from the partnership conducting a trade or business in the United States:

- In the case of a disregarded entity with a U.S. owner, the U.S. owner of the disregarded entity and not the entity;
- In the case of a grantor trust with a U.S. grantor or other U.S. owner, generally, the U.S. grantor or other U.S. owner of the grantor trust and not the trust; and
- In the case of a U.S. trust (other than a grantor trust), the U.S. trust (other than a grantor trust) and not the beneficiaries of the trust.

Foreign person. If you are a foreign person or the U.S. branch of a foreign bank that has elected to be treated as a U.S. person, do not use Form W-9. Instead, use the appropriate Form W-8 or Form 8233 (see Publication 515, Withholding of Tax on Nonresident Aliens and Foreign Entities).

Nonresident alien who becomes a resident alien. Generally, only a nonresident alien individual may use the terms of a tax treaty to reduce or eliminate U.S. tax on certain types of income. However, most tax treaties contain a provision known as a "saving clause." Exceptions specified in the saving clause may permit an exemption from tax to continue for certain types of income even after the payee has otherwise become a U.S. resident alien for tax purposes.

If you are a U.S. resident alien who is relying on an exception contained in the saving clause of a tax treaty to claim an exemption from U.S. tax on certain types of income, you must attach a statement to Form W-9 that specifies the following five items:

1. The treaty country. Generally, this must be the same treaty under which you claimed exemption from tax as a nonresident alien.
2. The treaty article addressing the income.
3. The article number (or location) in the tax treaty that contains the saving clause and its exceptions.
4. The type and amount of income that qualifies for the exemption from tax.
5. Sufficient facts to justify the exemption from tax under the terms of the treaty article.

Example. Article 20 of the U.S.-China income tax treaty allows an exemption from tax for scholarship income received by a Chinese student temporarily present in the United States. Under U.S. law, this student will become a resident alien for tax purposes if his or her stay in the United States exceeds 5 calendar years. However, paragraph 2 of the first Protocol to the U.S.-China treaty (dated April 30, 1984) allows the provisions of Article 20 to continue to apply even after the Chinese student becomes a resident alien of the United States. A Chinese student who qualifies for this exception (under paragraph 2 of the first protocol) and is relying on this exception to claim an exemption from tax on his or her scholarship or fellowship income would attach to Form W-9 a statement that includes the information described above to support that exemption.

If you are a nonresident alien or a foreign entity, give the requester the appropriate completed Form W-8 or Form 8233.

Backup Withholding

What is backup withholding? Persons making certain payments to you must under certain conditions withhold and pay to the IRS 28% of such payments. This is called "backup withholding." Payments that may be subject to backup withholding include interest, tax-exempt interest, dividends, broker and barter exchange transactions, rents, royalties, nonemployee pay, payments made in settlement of payment card and third party network transactions, and certain payments from fishing boat operators. Real estate transactions are not subject to backup withholding.

You will not be subject to backup withholding on payments you receive if you give the requester your correct TIN, make the proper certifications, and report all your taxable interest and dividends on your tax return.

Payments you receive will be subject to backup withholding if:

1. You do not furnish your TIN to the requester,
2. You do not certify your TIN when required (see the Part II instructions on page 3 for details),
3. The IRS tells the requester that you furnished an incorrect TIN,
4. The IRS tells you that you are subject to backup withholding because you did not report all your interest and dividends on your tax return (for reportable interest and dividends only), or
5. You do not certify to the requester that you are not subject to backup withholding under 4 above (for reportable interest and dividend accounts opened after 1983 only).

Certain payees and payments are exempt from backup withholding. See *Exempt payee code* on page 3 and the separate Instructions for the Requester of Form W-9 for more information.

Also see *Special rules for partnerships* above.

What is FATCA reporting?

The Foreign Account Tax Compliance Act (FATCA) requires a participating foreign financial institution to report all United States account holders that are specified United States persons. Certain payees are exempt from FATCA reporting. See *Exemption from FATCA reporting code* on page 3 and the Instructions for the Requester of Form W-9 for more information.

Updating Your Information

You must provide updated information to any person to whom you claimed to be an exempt payee if you are no longer an exempt payee and anticipate receiving reportable payments in the future from this person. For example, you may need to provide updated information if you are a C corporation that elects to be an S corporation, or if you no longer are tax exempt. In addition, you must furnish a new Form W-9 if the name or TIN changes for the account; for example, if the grantor of a grantor trust dies.

Penalties

Failure to furnish TIN. If you fail to furnish your correct TIN to a requester, you are subject to a penalty of $50 for each such failure unless your failure is due to reasonable cause and not to willful neglect.

Civil penalty for false information with respect to withholding. If you make a false statement with no reasonable basis that results in no backup withholding, you are subject to a $500 penalty.

Criminal penalty for falsifying information. Willfully falsifying certifications or affirmations may subject you to criminal penalties including fines and/or imprisonment.

Misuse of TINs. If the requester discloses or uses TINs in violation of federal law, the requester may be subject to civil and criminal penalties.

Specific Instructions

Line 1

You must enter one of the following on this line; **do not** leave this line blank. The name should match the name on your tax return.

If this Form W-9 is for a joint account, list first, and then circle, the name of the person or entity whose number you entered in Part I of Form W-9.

a. **Individual.** Generally, enter the name shown on your tax return. If you have changed your last name without informing the Social Security Administration (SSA) of the name change, enter your first name, the last name as shown on your social security card, and your new last name.

Note. ITIN applicant: Enter your individual name as it was entered on your Form W-7 application, line 1a. This should also be the same as the name you entered on the Form 1040/1040A/1040EZ you filed with your application.

b. **Sole proprietor or single-member LLC.** Enter your individual name as shown on your 1040/1040A/1040EZ on line 1. You may enter your business, trade, or "doing business as" (DBA) name on line 2.

c. **Partnership, LLC that is not a single-member LLC, C Corporation, or S Corporation.** Enter the entity's name as shown on the entity's tax return on line 1 and any business, trade, or DBA name on line 2.

d. **Other entities.** Enter your name as shown on required U.S. federal tax documents on line 1. This name should match the name shown on the charter or other legal document creating the entity. You may enter any business, trade, or DBA name on line 2.

e. **Disregarded entity.** For U.S. federal tax purposes, an entity that is disregarded as an entity separate from its owner is treated as a "disregarded entity." See Regulations section 301.7701-2(c)(2)(iii). Enter the owner's name on line 1. The name of the entity entered on line 1 should never be a disregarded entity. The name on line 1 should be the name shown on the income tax return on which the income should be reported. For example, if a foreign LLC that is treated as a disregarded entity for U.S. federal tax purposes has a single owner that is a U.S. person, the U.S. owner's name is required to be provided on line 1. If the direct owner of the entity is also a disregarded entity, enter the first owner that is not disregarded for federal tax purposes. Enter the disregarded entity's name on line 2, "Business name/disregarded entity name." If the owner of the disregarded entity is a foreign person, the owner must complete an appropriate Form W-8 instead of a Form W-9. This is the case even if the foreign person has a U.S. TIN.

Line 2

If you have a business name, trade name, DBA name, or disregarded entity name, you may enter it on line 2.

Line 3

Check the appropriate box in line 3 for the U.S. federal tax classification of the person whose name is entered on line 1. Check only one box in line 3.

Limited Liability Company (LLC). If the name on line 1 is an LLC treated as a partnership for U.S. federal tax purposes, check the "Limited Liability Company" box and enter "P" in the space provided. If the LLC has filed Form 8832 or 2553 to be taxed as a corporation, check the "Limited Liability Company" box and in the space provided enter "C" for C corporation or "S" for S corporation. If it is a single-member LLC that is a disregarded entity, do not check the "Limited Liability Company" box; instead check the first box in line 3 "Individual/sole proprietor or single-member LLC."

Line 4, Exemptions

If you are exempt from backup withholding and/or FATCA reporting, enter in the appropriate space in line 4 any code(s) that may apply to you.

Exempt payee code.

- Generally, individuals (including sole proprietors) are not exempt from backup withholding.
- Except as provided below, corporations are exempt from backup withholding for certain payments, including interest and dividends.
- Corporations are not exempt from backup withholding for payments made in settlement of payment card or third party network transactions.
- Corporations are not exempt from backup withholding with respect to attorneys' fees or gross proceeds paid to attorneys, and corporations that provide medical or health care services are not exempt with respect to payments reportable on Form 1099-MISC.

The following codes identify payees that are exempt from backup withholding. Enter the appropriate code in the space in line 4.

1—An organization exempt from tax under section 501(a), any IRA, or a custodial account under section 403(b)(7) if the account satisfies the requirements of section 401(f)(2)

2—The United States or any of its agencies or instrumentalities

3—A state, the District of Columbia, a U.S. commonwealth or possession, or any of their political subdivisions or instrumentalities

4—A foreign government or any of its political subdivisions, agencies, or instrumentalities

5—A corporation

6—A dealer in securities or commodities required to register in the United States, the District of Columbia, or a U.S. commonwealth or possession

7—A futures commission merchant registered with the Commodity Futures Trading Commission

8—A real estate investment trust

9—An entity registered at all times during the tax year under the Investment Company Act of 1940

10—A common trust fund operated by a bank under section 584(a)

11—A financial institution

12—A middleman known in the investment community as a nominee or custodian

13—A trust exempt from tax under section 664 or described in section 4947

The following chart shows types of payments that may be exempt from backup withholding. The chart applies to the exempt payees listed above, 1 through 13.

IF the payment is for . . .	THEN the payment is exempt for . . .
Interest and dividend payments	All exempt payees except for 7
Broker transactions	Exempt payees 1 through 4 and 6 through 11 and all C corporations. S corporations must not enter an exempt payee code because they are exempt only for sales of noncovered securities acquired prior to 2012.
Barter exchange transactions and patronage dividends	Exempt payees 1 through 4
Payments over $600 required to be reported and direct sales over $5,000[1]	Generally, exempt payees 1 through 5[2]
Payments made in settlement of payment card or third party network transactions	Exempt payees 1 through 4

[1] See Form 1099-MISC, Miscellaneous Income, and its instructions.

[2] However, the following payments made to a corporation and reportable on Form 1099-MISC are not exempt from backup withholding: medical and health care payments, attorneys' fees, gross proceeds paid to an attorney reportable under section 6045(f), and payments for services paid by a federal executive agency.

Exemption from FATCA reporting code. The following codes identify payees that are exempt from reporting under FATCA. These codes apply to persons submitting this form for accounts maintained outside of the United States by certain foreign financial institutions. Therefore, if you are only submitting this form for an account you hold in the United States, you may leave this field blank. Consult with the person requesting this form if you are uncertain if the financial institution is subject to these requirements. A requester may indicate that a code is not required by providing you with a Form W-9 with "Not Applicable" (or any similar indication) written or printed on the line for a FATCA exemption code.

A—An organization exempt from tax under section 501(a) or any individual retirement plan as defined in section 7701(a)(37)

B—The United States or any of its agencies or instrumentalities

C—A state, the District of Columbia, a U.S. commonwealth or possession, or any of their political subdivisions or instrumentalities

D—A corporation the stock of which is regularly traded on one or more established securities markets, as described in Regulations section 1.1472-1(c)(1)(i)

E—A corporation that is a member of the same expanded affiliated group as a corporation described in Regulations section 1.1472-1(c)(1)(i)

F—A dealer in securities, commodities, or derivative financial instruments (including notional principal contracts, futures, forwards, and options) that is registered as such under the laws of the United States or any state

G—A real estate investment trust

H—A regulated investment company as defined in section 851 or an entity registered at all times during the tax year under the Investment Company Act of 1940

I—A common trust fund as defined in section 584(a)

J—A bank as defined in section 581

K—A broker

L—A trust exempt from tax under section 664 or described in section 4947(a)(1)

M—A tax exempt trust under a section 403(b) plan or section 457(g) plan

Note. You may wish to consult with the financial institution requesting this form to determine whether the FATCA code and/or exempt payee code should be completed.

Line 5

Enter your address (number, street, and apartment or suite number). This is where the requester of this Form W-9 will mail your information returns.

Line 6

Enter your city, state, and ZIP code.

Part I. Taxpayer Identification Number (TIN)

Enter your TIN in the appropriate box. If you are a resident alien and you do not have and are not eligible to get an SSN, your TIN is your IRS individual taxpayer identification number (ITIN). Enter it in the social security number box. If you do not have an ITIN, see *How to get a TIN* below.

If you are a sole proprietor and you have an EIN, you may enter either your SSN or EIN. However, the IRS prefers that you use your SSN.

If you are a single-member LLC that is disregarded as an entity separate from its owner (see *Limited Liability Company (LLC)* on this page), enter the owner's SSN (or EIN, if the owner has one). Do not enter the disregarded entity's EIN. If the LLC is classified as a corporation or partnership, enter the entity's EIN.

Note. See the chart on page 4 for further clarification of name and TIN combinations.

How to get a TIN. If you do not have a TIN, apply for one immediately. To apply for an SSN, get Form SS-5, Application for a Social Security Card, from your local SSA office or get this form online at *www.ssa.gov*. You may also get this form by calling 1-800-772-1213. Use Form W-7, Application for IRS Individual Taxpayer Identification Number, to apply for an ITIN, or Form SS-4, Application for Employer Identification Number, to apply for an EIN. You can apply for an EIN online by accessing the IRS website at *www.irs.gov/businesses* and clicking on Employer Identification Number (EIN) under Starting a Business. You can get Forms W-7 and SS-4 from the IRS by visiting IRS.gov or by calling 1-800-TAX-FORM (1-800-829-3676).

If you are asked to complete Form W-9 but do not have a TIN, apply for a TIN and write "Applied For" in the space for the TIN, sign and date the form, and give it to the requester. For interest and dividend payments, and certain payments made with respect to readily tradable instruments, generally you will have 60 days to get a TIN and give it to the requester before you are subject to backup withholding on payments. The 60-day rule does not apply to other types of payments. You will be subject to backup withholding on all such payments until you provide your TIN to the requester.

Note. Entering "Applied For" means that you have already applied for a TIN or that you intend to apply for one soon.

Caution: *A disregarded U.S. entity that has a foreign owner must use the appropriate Form W-8.*

Part II. Certification

To establish to the withholding agent that you are a U.S. person, or resident alien, sign Form W-9. You may be requested to sign by the withholding agent even if items 1, 4, or 5 below indicate otherwise.

For a joint account, only the person whose TIN is shown in Part I should sign (when required). In the case of a disregarded entity, the person identified on line 1 must sign. Exempt payees, see *Exempt payee code* earlier.

Signature requirements. Complete the certification as indicated in items 1 through 5 below.

1. Interest, dividend, and barter exchange accounts opened before 1984 and broker accounts considered active during 1983. You must give your correct TIN, but you do not have to sign the certification.

2. Interest, dividend, broker, and barter exchange accounts opened after 1983 and broker accounts considered inactive during 1983. You must sign the certification or backup withholding will apply. If you are subject to backup withholding and you are merely providing your correct TIN to the requester, you must cross out item 2 in the certification before signing the form.

3. Real estate transactions. You must sign the certification. You may cross out item 2 of the certification.

4. Other payments. You must give your correct TIN, but you do not have to sign the certification unless you have been notified that you have previously given an incorrect TIN. "Other payments" include payments made in the course of the requester's trade or business for rents, royalties, goods (other than bills for merchandise), medical and health care services (including payments to corporations), payments to a nonemployee for services, payments made in settlement of payment card and third party network transactions, payments to certain fishing boat crew members and fishermen, and gross proceeds paid to attorneys (including payments to corporations).

5. Mortgage interest paid by you, acquisition or abandonment of secured property, cancellation of debt, qualified tuition program payments (under section 529), IRA, Coverdell ESA, Archer MSA or HSA contributions or distributions, and pension distributions. You must give your correct TIN, but you do not have to sign the certification.

What Name and Number To Give the Requester

For this type of account:	Give name and SSN of:
1. Individual	The individual
2. Two or more individuals (joint account)	The actual owner of the account or, if combined funds, the first individual on the account[1]
3. Custodian account of a minor (Uniform Gift to Minors Act)	The minor[2]
4. a. The usual revocable savings trust (grantor is also trustee) b. So-called trust account that is not a legal or valid trust under state law	The grantor-trustee[1] The actual owner[1]
5. Sole proprietorship or disregarded entity owned by an individual	The owner[3]
6. Grantor trust filing under Optional Form 1099 Filing Method 1 (see Regulations section 1.671-4(b)(2)(i)(A))	The grantor*
For this type of account:	**Give name and EIN of:**
7. Disregarded entity not owned by an individual	The owner
8. A valid trust, estate, or pension trust	Legal entity[4]
9. Corporation or LLC electing corporate status on Form 8832 or Form 2553	The corporation
10. Association, club, religious, charitable, educational, or other tax-exempt organization	The organization
11. Partnership or multi-member LLC	The partnership
12. A broker or registered nominee	The broker or nominee
13. Account with the Department of Agriculture in the name of a public entity (such as a state or local government, school district, or prison) that receives agricultural program payments	The public entity
14. Grantor trust filing under the Form 1041 Filing Method or the Optional Form 1099 Filing Method 2 (see Regulations section 1.671-4(b)(2)(i)(B))	The trust

[1] List first and circle the name of the person whose number you furnish. If only one person on a joint account has an SSN, that person's number must be furnished.

[2] Circle the minor's name and furnish the minor's SSN.

[3] You must show your individual name and you may also enter your business or DBA name on the "Business name/disregarded entity" name line. You may use either your SSN or EIN (if you have one), but the IRS encourages you to use your SSN.

[4] List first and circle the name of the trust, estate, or pension trust. (Do not furnish the TIN of the personal representative or trustee unless the legal entity itself is not designated in the account title.) Also see *Special rules for partnerships* on page 2.

*Note. Grantor also must provide a Form W-9 to trustee of trust.

Note. If no name is circled when more than one name is listed, the number will be considered to be that of the first name listed.

Secure Your Tax Records from Identity Theft

Identity theft occurs when someone uses your personal information such as your name, SSN, or other identifying information, without your permission, to commit fraud or other crimes. An identity thief may use your SSN to get a job or may file a tax return using your SSN to receive a refund.

To reduce your risk:

- Protect your SSN,
- Ensure your employer is protecting your SSN, and
- Be careful when choosing a tax preparer.

If your tax records are affected by identity theft and you receive a notice from the IRS, respond right away to the name and phone number printed on the IRS notice or letter.

If your tax records are not currently affected by identity theft but you think you are at risk due to a lost or stolen purse or wallet, questionable credit card activity or credit report, contact the IRS Identity Theft Hotline at 1-800-908-4490 or submit Form 14039.

For more information, see Publication 4535, Identity Theft Prevention and Victim Assistance.

Victims of identity theft who are experiencing economic harm or a system problem, or are seeking help in resolving tax problems that have not been resolved through normal channels, may be eligible for Taxpayer Advocate Service (TAS) assistance. You can reach TAS by calling the TAS toll-free case intake line at 1-877-777-4778 or TTY/TDD 1-800-829-4059.

Protect yourself from suspicious emails or phishing schemes. Phishing is the creation and use of email and websites designed to mimic legitimate business emails and websites. The most common act is sending an email to a user falsely claiming to be an established legitimate enterprise in an attempt to scam the user into surrendering private information that will be used for identity theft.

The IRS does not initiate contacts with taxpayers via emails. Also, the IRS does not request personal detailed information through email or ask taxpayers for the PIN numbers, passwords, or similar secret access information for their credit card, bank, or other financial accounts.

If you receive an unsolicited email claiming to be from the IRS, forward this message to *phishing@irs.gov*. You may also report misuse of the IRS name, logo, or other IRS property to the Treasury Inspector General for Tax Administration (TIGTA) at 1-800-366-4484. You can forward suspicious emails to the Federal Trade Commission at: *spam@uce.gov* or contact them at *www.ftc.gov/idtheft* or 1-877-IDTHEFT (1-877-438-4338).

Visit IRS.gov to learn more about identity theft and how to reduce your risk.

Privacy Act Notice

Section 6109 of the Internal Revenue Code requires you to provide your correct TIN to persons (including federal agencies) who are required to file information returns with the IRS to report interest, dividends, or certain other income paid to you; mortgage interest you paid; the acquisition or abandonment of secured property; the cancellation of debt; or contributions you made to an IRA, Archer MSA, or HSA. The person collecting this form uses the information on the form to file information returns with the IRS, reporting the above information. Routine uses of this information include giving it to the Department of Justice for civil and criminal litigation and to cities, states, the District of Columbia, and U.S. commonwealths and possessions for use in administering their laws. The information also may be disclosed to other countries under a treaty, to federal and state agencies to enforce civil and criminal laws, or to federal law enforcement and intelligence agencies to combat terrorism. You must provide your TIN whether or not you are required to file a tax return. Under section 3406, payers must generally withhold a percentage of taxable interest, dividend, and certain other payments to a payee who does not give a TIN to the payer. Certain penalties may also apply for providing false or fraudulent information.

F6.2 NON-CONFLICT OF INTEREST

By submitting a bid in response to this solicitation, the Bidder represents that in the preparation and submission of this bid, said Bidder did not either directly or indirectly, enter into any combination or arrangement with any person, Bidder, Corporation or enter into any agreement, participate in any collusion, or otherwise take any action in the restraint of free, competitive bidding in violation of the Sherman Act (15 U.S.C. Section I or Section 59.1-9.1 through 59.1-9.17 or Sections 59.1 – 68.6 through 59.68.8). Collusion and fraud in bid preparation shall be reported to the State of Georgia Attorney General and the United States Justice Department.

Bidder certifies that to the best of its knowledge, no circumstances exist which shall cause a conflict of interest in performing services for Macon-Bibb County, and that no company or person other than bona fide employees working solely for our firm has been employed or retained to solicit or secure an agreement resulting from this Invitation for Bids.

Signature: _____

Type Name: _____

Title: _____

Firm: _____

F6.3 NON-COLLUSION AFFIDAVIT

IFB #18-026-CW WIDENING AND RECONSTRUCTION OF JEFFERSONVILLE ROAD FROM S.R. 3/EMERY HWY TO RECREATION RD AND MILLERFIELD RD FROM JEFFERSONVILLE RD TO BRISTOL DR IN BIBB COUNTY, GEORGIA

I, _____ of the City of _____, in the County of _____, and the State of _____, of full age, being duly sworn according to law on my oath depose and say

that: I am_____ of the firm of _____

The respondent making the Bidder for the above named Contract, and that I executed the said Bid with full authority so to do; that said bidder has not, directly or indirectly, entered into any agreement, participate in any collusion, or otherwise taken any action in restraint of free, competitive bidding in connection with the above named Contract; and that all statements contained in said Bid and in this affidavit are true and correct, and made with full knowledge that the County of Macon-Bibb relied upon the truth of the statements contained in said Bid and in the statements contained in this affidavit in awarding the Contract for the said Bid.

I further warrant that no person or selling agency has been employed or retained to solicit or secure such Contract upon an agreement or understanding for a commission, percentage, brokerage, or contingent fee, except bonafide employees or bonafide established commercial or selling agencies maintained by

_____
(Name of Vendor)

Subscribed and sworn to before me this _____day of _____, 20_____.

_____
(Signature of Notary Public)

Notary Public of _____

My Commission expires_____, 20_____

F6.4 BUSINESS ENTITY CERTIFICATE

(a) CORPORATE CERTIFICATE

I, _____, certify that I am the

_____ of the Corporation named as Bidder herein, same
(title)

being organized and incorporated to do business under the laws of the State of _____;

that _____who executed this Bid on behalf of the Bidder was, then and

there, _____ and that said Bid was duly signed by said officer for and
(title)

on behalf of said corporation, pursuant to the authority of its governing body and within the scope of its

corporate powers.

This _____ day of _____, 20 _____.

_____

(Printed Name)

_____

_

(Signature)

(Corporate Seal must be affixed above)

(b) PARTNERSHIP, LLC AND OTHER ENTITIES

I, _____, certify that I am authorized to sign to

commit _____ named a Bidder in the foregoing Bid. That said

company is formed under the laws of the State of _____.

This ___ day of _____, 20___.

_____

(Printed Name)

_____

_

(Signature)

F6.5 CERTIFICATE OF AUTHORITY – JOINT VENTURE

(Separate Certificate to be submitted by each joint venture partner)

I, _____, (1) certify that:

1. I am the _____(2) of _____, (3) (hereinafter "Venturer");

2. Venturer is a partner and participation in the joint venture having submitted the Invitation for Bids or Request for Proposal No. _____ for

   _____
   (Insert Project Name);

3. Venturer is organized and incorporated to do business under the laws of the State of _____; and

4. Said Invitation for Bids or Request for Proposal No. _____was duly signed by said officer for and on behalf of said Venturer and the Contractor pursuant to the authority of the governing body of each and within the scope of its corporate powers.

I further certify that the names and addresses of the owners of all the outstanding stock or ownership interest in Venturer as of this date are as follows:

_____
_____
_____
_____

This _____ day of _____, 20____.

By:_____
Signature of Person Executing Certification

INSTRUCTIONS FOR COMPLETION OF THIS CERTIFICATE

1. Name of secretary (if Venturer is a corporation), or Manager or CEO (if Venturer is a LLP of Venturer.
2. Title of person executing Certification.
3. Name of joint venture partner.

COPY THIS FORM AND SUBMIT SEPARATE CERTIFICATES FOR EACH JOINT VENTURE PARTNER WITH THE BID OR PROPOSAL.

F6.6 ILLEGAL IMMIGRATION REFORM AND ENFORCEMENT ACT

Contractor Affidavit under O.C.G.A. § 13-10-91(b)(1)

By executing this affidavit, the undersigned contractor verifies its compliance with O.C.G.A. § 1310-91, stating affirmatively that the individual, firm or corporation which is engaged in the physical performance for services on behalf of Macon-Bibb County Board of Commission (name of public employer), has registered with, is authorized to use and uses the federal work authorization program commonly known as E-Verify, or any subsequent replacement program, in accordance with the applicable provisions and deadlines established in O.C.G.A. § 13-10-91. Furthermore, the undersigned contractor will continue to use the federal work authorization program throughout the contract period and the undersigned contractor will contract for the physical performance of services in satisfaction of such contract only with Sub-Contractors who present an affidavit to the contractor with the information required by O.C.G.A. § 13-10-91(b). Contractor hereby attests that its federal work authorization user identification number and date of authorization are as follows:

_____
Federal Work Authorization User Identification Number

_____
Date of Authorization

_____
Name of Contractor

IFB #18-026-CW Widening and Reconstruction of Jeffersonville Road from S.R. 3/Emery Hwy to Recreation Rd and Millerfield Rd from Jeffersonville Rd to Bristol Dr in Bibb County, Georgia
Name of Project

Macon-Bibb County Board of Commissioners
Name of Public Employer

I hereby declare under penalty of perjury that the foregoing is true and correct.

Executed on _____, ____, 20___ in _____(city), _____(state).

_____
Signature of Authorized Officer or Agent

_____
Printed Name and Title of Authorized Officer or Agent

SUBSCRIBED AND SWORN BEFORE ME

ON THIS THE ____ DAY OF _____. 20___.

_____
NOTARY PUBLIC

My Commission Expires: _____

F6.7 ILLEGAL IMMIGRATION REFORM AND ENFORCEMENT ACT

Sub-Contractor Affidavit under O.C.G.A. § 13-10-91(b)(3)

By executing this affidavit, the undersigned Sub-Contractor verifies its compliance with O.C.G.A. § 13-10-91, stating affirmatively that the individual, firm or corporation which is engaged in the physical performance of services under a contract with _____ (name of contractor) on behalf of the Macon-Bibb County Board of Commissioners has registered with, is authorized to use and uses the federal work authorization program commonly known as E-Verify, or any subsequent replacement program, in accordance with the applicable provisions and deadlines established in O.C.G.A. § 13-10-91. Furthermore, the undersigned Sub-Contractor will continue to use the federal work authorization program throughout the contract period and the undersigned Sub-Contractor will contract for the physical performance of services in satisfaction of such contract only with Sub-Sub-Contractors who present an affidavit to the Sub-Contractor with the information required by O.C.G.A. § 13-10-91(b). Additionally, the undersigned Sub-Contractor will forward notice of the receipt of an affidavit from a Sub-Sub-Contractor to the Contractor within five business days of receipt. If the undersigned Sub-Contractor receives notice of receipt of an affidavit from any Sub-Sub-Contractor that has contracted with a Sub-Sub-Contractor to forward, within five business days of receipt, a copy of such notice to the contractor. Sub-Contractor hereby attests that its federal work authorization user identification number and date of authorization are as follows:

_____ _____

Federal Work Authorization User Identification Number Date of Authorization

_____

Name of Sub-Contractor

IFB #18-026-CW Widening and Reconstruction of Jeffersonville Road from S.R. 3/Emery Hwy to Recreation Rd and Millerfield Rd from Jeffersonville Rd to Bristol Dr in Bibb County, Georgia
Name of Project

Macon-Bibb County Board of Commissioners
Name of Public Employer

I hereby declare under penalty of perjury that the forgoing is true and correct.

Executed on _____, _____, 20__ in _____(County), _____(state).

_____

Signature of Authorized Officer or Agent

_____

Printed name and Title of Authorized Officer or Agent

SUBSCRIBED AND SWORN BEFORE
ME ON THIS THE _____, DAY OF _____, 20___.

_____

NOTARY PUBLIC

My Commission Expires: _____

F6.8 SUB-CONTRACTOR INFORMATION FORM

The Bidder shall identify all proposed Sub-Contractors who shall be performing work under the proposed Contract. The Bidder certifies that the following individuals, firms or businesses must be hired or awarded subcontracts for the indicated portions of the work in the event that the Bidder is awarded a Contract.

Please list all proposed Sub-Contractors below:

1. TYPE OF WORK: _____

_____
Name

_____, _____, _____, _____
Street Address City State Zip Code

2. TYPE OF WORK: _____

_____
Name

_____, _____, _____, _____
Street Address City State Zip Code

3. TYPE OF WORK: _____

_____
Name

_____, _____, _____, _____
Street Address City State Zip Code

4. TYPE OF WORK: _____

_____
Name

_____, _____, _____, _____
Street Address City State Zip Code

(Make additional copies as necessary)

F6.9 ACKNOWLEDGEMENT OF BIDDER

STATE OF GEORGIA
COUNTY OF MACON-BIBB
BEFORE ME, the undersigned authority a Notary Public in and for the State of _____, on this day personally appeared _____ who, after having first been duly sworn, upon oath did depose and say; that the forgoing bid submitted by _____ hereafter called "Bidder" is duly authorized agent of said company and that the person signing said bid has been duly authorized to execute the same. Bidder affirms that it is duly authorized to execute this Bid, that this company, corporation, firm, partnership or individual has not prepared its bid in collusion with any other Bidder, and that the contents of this bid as to prices, terms or conditions of said bid have not been communicated by the undersigned nor by any employee or agent to any other person engaged in this type of business prior to the official opening of this bid.

The undersigned certifies that the bid prices contained in this bid have been carefully checked and are submitted as correct and final and if bid is accepted, agrees to furnish the articles and/or services listed and offered in this document at the prices and terms stated, subject to the conditions and Scope of Work of this Invitation for Bids.

Bidder Information:

_____	_____
(Company)	(Signature)
_____	_____
(Address)	(Printed Name)
_____	_____
(City, State, Zip)	(Title)

SWORN TO AND SUBSCRIBED
BEFORE ME THIS _____ day
of _____ 20___.

_____
Notary Public in and for the State of _____

(Seal)

(**FAILURE TO SIGN THIS SECTION SHALL DISQUALIFY BIDDER'S RESPONSE FROM FURTHER CONSIDERATION**)

F6.10 SAVE AFFIDAVIT
CONTRACT WITH A LOCAL GOVERNMENT

STATE OF GEORGIA
MACON-BIBB COUNTY

By executing this affidavit under oath, as an applicant for a Macon-Bibb County, Georgia contract as referenced in O.C.G.A. § 50-36-1 and the August 1, 2010, "Report of the Attorney General on Public Benefits," I am stating the following with respect to my ability to enter into a contract with Macon-Bibb County:

_____

Name of natural person applying on behalf of individual, business, corporation, partnership or other private entity)

As a representative of:_____

(Name of the business, corporation, partnership, or other private entity)

(1) _____ I am 18 years of age or older.
(2) _____ I am a United States citizen.
(3) _____ I am a legal permanent resident. My Alien Registration Number is _____.
(4) _____ I am an otherwise qualified alien or non-immigrant under the Federal Immigration and Nationality Act and lawfully present in the United States. *

In making the above representation under oath, I understand that any person who knowingly and willfully makes a false, fictitious, or fraudulent statement or representation in an affidavit shall be guilty of a violation of O.C.G.A. § 16-10-20.

This _____ day of _____, 20_____.

Signature of Applicant: _____

Printed Name: _____

Subscribed and sworn before me this _____
day of _____, 20_____.

_____
Notary Public

My commission expires: _____

***Note:** O.C.G.A. § 50-36-1(e) (2) requires that aliens under the Federal Immigration and Nationality Act, Title 8 U.S.C., as amended, provide their Alien Registration Number. Because legal permanent residents are included in the federal definition of "alien," legal permanent residents must also provide their Alien Registration Number. Qualified aliens that do not have an Alien Registration Number may supply another identifying number: _____.

F6.11 REFERENCE AND RELEASE FORM

List at least four (4) references for the Prime Bidder and each proposed Sub-Contractor using a separate Reference and Release Form for each. (Please make copies as necessary and submit with the Bid.) Provide the information requested in the form below for the contact person who will verify the Bidder's experience and ability to perform the type of services listed in the IFB.

Company Name	Contract Period (Including Completion Date)		
Contact Person Name and Title	Telephone Number (include area code)		
Complete Primary Address	City	State	Zip Code
Email Address	Fax Number (include area code)		
Project Name			

Company Name	Contract Period (Including Completion Date)		
Contact Person Name and Title	Telephone Number (include area code)		
Complete Primary Address	City	State	Zip Code
Email Address	Fax Number (include area code)		
Project Name			

Company Name	Contract Period (Including Completion Date)		
Contact Person Name and Title	Telephone Number (include area code)		
Complete Primary Address	City	State	Zip Code
Email Address	Fax Number (include area code)		
Project Name			

Company Name	Contract Period (Including Completion Date)		
Contact Person Name and Title	Telephone Number (include area code)		
Complete Primary Address	City	State	Zip Code
Email Address	Fax Number (include area code)		
Project Name			

REFERENCE CHECK RELEASE STATEMENT

You are authorized to contact the references provided above for purposes of the IFB.

Signed_____ Title _____
(Authorized Signature)

Company Name_____ □ Bidder □ Sub-Contractor

Date_____

F6.12 ACKNOWLEDGEMENT OF INSURANCE REQUIREMENTS

I,_____, as an authorized agent of _____ shall comply completely and promptly with all insurance requirements contained in the County's Request for IFB #18-026-CW Widening and Reconstruction of Jeffersonville Road from S.R. 3/Emery Hwy to Recreation Rd and Millerfield Rd from Jeffersonville Rd to Bristol Dr in Bibb County, Georgia pertaining to insurance and/or bonding.

Bidder understands that it is required to share the County's insurance and/or bonding requirements with the appropriate surety company(s) and/or insurance brokers, agents, underwriters, etc. prior to any award of a contract and to take all necessary steps to ensure compliance with the applicable bonding, insurance and endorsement requirements without delay**. Bidder understands, acknowledges and agrees that its failure to fully comply with these requirements within five (5) days and no more than ten (10) days of the date Bidder receives a final contract from the County, may result in the forfeiture of the bid guarantee submitted with its bid and/or the disqualification of Bidder from further consideration for the contract.**

By executing this Acknowledgement of Insurance Requirements, I represent that I am authorized to make the representations contained herein on behalf of _____. Further by signing below, I represent that _____understands and agrees to unconditionally comply with all requirements related to bonding and/or insurance contained in the County's contract attached hereto as Appendix C.

Date: _____, 20___.

Corporate Bidder

_____
Name: _____
Title: _____

_____
Notary Public (Seal)
My Commission Expires: _____

Non-Corporate Bidder

_____
Name: _____
Title: _____

_____
Notary Public (Seal)
My Commission Expires: _____

F6.13 EXCEPTIONS FORM

If there are any exception(s) or clarification(s) taken to the IFB use this form to list description and page number to which you are taking an exception. ANY exception(s) to the IFB shall be explained in full. No exceptions shall be taken to the County's insurance or indemnification provisions. Macon-Bibb County will determine the Bidder's compliance with the bid requirements based on the information submitted and its exceptions to the IFB. Attach additional pages if more space is needed.

Item Description and Page Number from IFB	Description of Exception

ATTACHMENT A
SCOPE OF WORK

1. The Scope of Work relates to the following Project: Widening and Reconstruction of Jeffersonville Road from S.R. 3/Emery Hwy to Recreation Rd and Millerfield Rd from Jeffersonville Rd to Bristol Dr in Bibb County, Georgia. The project will consist of the following:

1.1 Construction of approximately 3.0 kilometers of new roadway along Jeffersonville Road from SR 3/Emery Highway to Recreation Road and Millerfield Road from Jeffersonville Road to Bristol Drive in Bibb County, Georgia. The Project consists of replacing a 2-lane rural roadway section with a 4-lane urban roadway section including a center two-way left turn lane. The Project also includes the construction of a new 0.093 kilometer bridge over Walnut Creek to replace the existing deficient bridge. The proposed Project includes urban shoulders with outside curb and gutter and sidewalks, constructed in compliance with the Americans with Disabilities Act (ADA) requirements.

2. A County Construction Engineering Inspector (CEI) will be onsite for the duration of the construction activities. During construction, all communication from the Bidder must be directed to the CEI. The County's CEI will monitor and inspect the work as it progresses.

3. The Bidder must furnish all of the work in accordance with this IFB and all incidental work necessary to complete the Project in an acceptable manner approved by the County.

4. DEFINITIONS

4.1 The term "Work" refers to the construction, labor, materials, equipment, tools, machinery, testing, temporary services and utilities, supervision, administration, coordination, planning, insurance, bonds, transportation, security, and all other services and things necessary to provide the County with the facilities, improvements, features, and functions described in Attachment A, Scope of Work; Attachment C, Draft County Agreement; Exhibit L, Project Specific Special Provisions; and Exhibit M, GDOT Standard Specifications.

4.2 Change order refers to a written order initiated by the County directing the Bidder to perform changes, additions, or deletions in the work.

4.3 Department refers to the Macon-Bibb County Board of Commission.

4.4 Director refers to the County Engineer for Macon-Bibb County.

4.5 Engineer refers to the County Engineer for Macon-Bibb County or his/her designee.

4.6 Site Construction Engineer, Project Engineer or CEI refers to the Macon-Bibb County Construction Engineering Inspector.

5. MATERIALS AND WORKMANSHIP

5.1 The Bidder will be responsible for quality control testing of materials incorporated into the Project. The CEI will be responsible for quality assurance testing of materials incorporated into the Project. Materials test frequency will, at minimum, meet GDOT Construction Manual requirements. Copies of all test results and documentation will be provided to the Bidder. All materials will meet appropriate GDOT Specifications

unless otherwise noted. All testing will meet the requirements outlined in the GDOT Sampling, Testing, and Inspection Guide.

5.2 Samples of all materials provided by the Bidder will be subject to submittal to the GDOT Testing Laboratory and/or other approved testing labs; any materials found to be non-compliant with the specifications will be rejected. The Bidder will be responsible for replacing any materials and work performed based on the rejected samples at no additional cost to the County.

5.3 DEVIATION IN QUANTITIES

The quantities set forth herein are estimates only and may vary based upon the Project site. It is the responsibility of the Bidder to inspect the Project site before beginning the work. The County reserves the right to add, delete, increase, decrease or substitute streets and pay items at any time. The Bidder must notify the CEI if additional quantities or line items are required which were not identified in the Contract quantities. At no time will the Bidder proceed with any work outside the prescribed Scope of Services for which additional payment will be requested without the written authorization of the County. The Bidder will not be entitled to an adjustment of the unit price on items which increase or decrease from the original quantity.

5.4 REMOVING, RESETTING AND MAINTAINING SIGNS

The Bidder must remove as required and reset any roadway signs and posts that conflict with the work. The Bidder must coordinate with the County and the property owners all work associated with removing and resetting any signs. All costs associated with maintaining existing signs shall be included in the Lump Sum Traffic Control pay item.

5.5 TRAFFIC CONTROL - See GDOT Special Provision 150 for reference and guide

5.5.1 The Bidder must, at all times, conduct its work to assure the least possible obstruction of traffic. The safety and convenience of the general public, the residents along the roadways, and the protection of persons and properties shall be provided for by the Bidder as specified in GDOT Standards Specifications, Exhibit B, attached hereto and incorporated herein by reference; including, but not limited to, Sections 104.05, 107.09, and 150.

5.5.2 Traffic whose origin and destination is within the limits of the project shall be provided ingress and egress at all times unless otherwise specified by the County. The ingress and egress includes entrances and exits via driveways at various properties and access to the intersecting roads and streets. The Bidder must maintain sufficient personnel and equipment (including certified flaggers and traffic control signing) on the project at all times, particularly during inclement weather, to ensure that ingress and egress are safely provided when and where required. Mailboxes and fire hydrants shall not be obstructed from access.

5.5.3 Two-way traffic shall be maintained at all times, utilizing certified flaggers as necessary, unless otherwise specified or approved by the County. In the event of an emergency situation, the Bidder must provide access to emergency vehicles and/or emergency personnel through or around the construction area. Any pavement damaged by such an occurrence must be repaired by the Bidder at no additional cost to the County.

5.5.4 The Bidder must furnish, install and maintain all necessary and required barricades, signs, and other traffic control devices in accordance with the Manual on Uniform Traffic Control Devices (MUTCD) and Specifications. The Bidder must take all necessary precautions for the protection of the workers and safety of the public. All personnel and equipment required for maintaining public convenience and safety will be paid for under the lump sum pay item 150-1000 – Traffic Control.

5.5.5 All existing signs, pavement markers, and other traffic control devices removed or damaged during construction operations must be reinstalled or replaced at the Bidder's expense. At no time must the Bidder remove regulatory signing, which may cause a hazard to the public. The Bidder must, within the same calendar day, place temporary pavement markings by painting, if the permanent markings cannot be placed the same day to match existing pavement markings on milled or resurfaced pavements. No work will be allowed to proceed the following day if the pavement markings are not in place. The cost for temporary pavement markings shall be included in the lump sum pay item 150-1000 – Traffic Control.

5.5.6 The Bidder is responsible for picking up, erecting and maintaining the temporary SPLOST identification signs. These signs shall be erected at the project limits of Jeffersonville Road and Millerfield Road. The signs will be supplied by the County. All work, materials and labor necessary for this task shall be included in the lump sum pay item 150-1000 – Traffic Control. The Bidder is responsible for returning these signs to the County after Project is complete.

5.6 LINES, GRADES, AND MEASUREMENTS

5.6.1 Such stakes and markings as the County may set for the County or the Bidder's guidance shall be preserved by the Bidder. Failure to protect such stakes or markings, or gross negligence on the Bidder's part resulting in loss of same, may result in the Bidder being charged for its replacement.

5.6.2 The Bidder must exercise proper care and caution to verify the grades and figures given before proceeding with the work. The Bidder must be responsible for any damaged or defective work caused by its failure to provide proper care and caution. The Bidder must promptly notify the County of any errors or discrepancies discovered in order for the proper corrections to be made.

5.6.3 The Bidder must verify all dimensions before ordering material or performing any work which is dependent upon proper size or installation upon coordination with conditions. No consideration will be given on any claim based on the differences between the actual dimensions and those indicated on the Drawings. Any difference which may be found must be submitted to the County for resolution before proceeding with the work.

5.7 UTILITIES, PROTECTION OF WORK, PROPERTY, AND PERSONS

5.7.1 The Bidder is responsible for initiating, maintaining, and supervising all safety precautions and programs in connection with the work. The Bidder must take all necessary precautions for the safety of, and must provide the necessary protection to prevent damage, injury, or loss to all employees on the work and other persons who may be affected thereby. All the work,

materials, or equipment whether in storage on or off the site, and other properties at the site or adjacent thereto, including, but not limited to: trees, shrubs, lawns, lakes, drainage ways, walks, pavements, roadways, structures, and utilities not designated for removal, relocation or replacement in the course of construction.

5.7.2 The Bidder shall erect and maintain, as required by the conditions and progress of the work, all necessary warning safeguards for devices and the safety and protection of the work, the public, and adjoining properties. The Contractor shall take every precaution not to leave equipment and materials where they can be reached and used for defacing new or existing work at any time.

5.7.3 If existing utilities or structures are indicated by the Contract, no warranty is made as to the accuracy or completeness of such indication. The Bidder must comply with all applicable State law concerning the marking and location of existing utilities.

The Bidder must, prior to commencing other on-site work, accurately locate above and below ground utilities and structures, which may be affected by the work, using whatever means may be appropriate. The Bidder must mark the location of existing utilities and structures, not otherwise readily visible, with flags, stakes, barricades, or other suitable means, and shall preserve and protect all utilities and structures not designated for removal, relocation, or replacement in the course of construction. The Bidder must notify the County promptly on discovery of any conflict between the contract plans and any existing facility.

5.7.4 The Bidder must contact utility companies to identify adjacent utilities prior to beginning construction operations. If any utility identify conflicts with construction operations, the Bidder must notify the CEI prior to commencement of construction operations in the affected area. When paving over utility structures that will be raised later, the Bidder must clearly and accurately mark the location.

5.7.5 All existing utilities, both public and private, including but not limited to: sewer, gas, electrical, and telephone services, shall be protected and their operation shall be maintained throughout the course of the work. Any temporary shutdown of an existing service shall be arranged between the Bidder and the responsible agency. The Bidder must assume full responsibility and hold the County harmless from the result of any damage that may occur as a result of the Bidder's activities in this regard.

5.7.6 In emergencies affecting the safety of persons or damages to the work or property at the site or adjacent thereto, or unanticipated conditions where delay would substantially impact the time or cost of work, the Bidder, upon notification to the County, shall act to prevent threatened damage, injury, or loss.

5.8 GRASSING - See GDOT Special Provision 700 for reference and guide

Final acceptance of the work will not be issued until a permanent stand of grass has been established throughout all disturbed areas. The Bidder may elect to place sod in lieu of permanent grass seed if the work is completed outside of the permanent grassing

season as specified in Section 700 of GDOT's Special Provisions. No adjustment in the unit price will be made if the Bidder elects to utilize sod in lieu of permanent grass seed.

6. LAND AND RIGHTS-OF-WAY

6.1 Prior to entering on any land or right-of-way, the Contractor shall ascertain the requirements of applicable permits or easements obtained by the County, and shall conduct its Work in accordance with requirements thereof including the giving of notice. The Contractor shall be fully responsible for performing work to the requirements of any permit or easement granting entity even though such requirements may exceed or be more stringent than that otherwise required by the Contract, and shall compensate the County fully for any loss or expense arising from failure of the Contractor to perform as required by such entity. The Contractor shall provide at its own expense, without liability to the County, any additional land and access thereto that the Contractor may desire for temporary construction facilities, or for storage of materials.

6.2 The Contractor upon approval of the CEI may trim trees to a point above the work area as necessary to provide for the safe and continuous operation of the equipment. If trimming of any tree is necessary, the cost of this portion of work shall be included in the overall bid price for the project.

6.3 REMOVING, RESTING AND MAINTAINING MAILBOXES

The Contractor shall remove, as needed, and reset any mailboxes and posts that conflict with the work. Any mailboxes or posts that are damaged by the Contractor shall be replaced at no additional cost to the County. The Contractor shall maintain the mailboxes such that mail pick-up and delivery is not interrupted at any time as needed. The Contractor shall coordinate with the County and the property owners all work associated with removing and resetting the mailboxes. Mailboxes that require resetting shall adhere to AASHTO's '*A Guide for Erecting Mailboxes on Highways*', and current requirements of the United States Postal Service (USPS).

7. CLEANING UP

7.1 The Contractor shall at all times, keep the premises free from accumulation of waste materials or rubbish caused by the Contractor's employees or work. Upon completion of the Work, the Contractor shall remove all its plants, tools, materials, and other articles from the property of the County. Cleanup of roadways is required after each operation (i.e. milling, patching, resurfacing, etc.). Final restoration and clean-up work shall be performed immediately after a street is completed. Sweeping of debris into gutters or sides of roads is not acceptable. All loose debris shall be removed from the roadway surface within twenty-four (24) hours after resurfacing. Work will not be allowed to proceed and progress payments will be withheld until cleanup has been completed as directed by the CEI.

7.2 If the Contractor fails to clean up as provided in the Contract, the County may do so and the cost thereof shall be charged to the Contractor. The Contractor shall ensure that neither it, its subcontractors nor their employees or agents bring any hazardous materials or other materials/waste regulated by state, federal or local law, which are not commonly used in the construction process or which are not listed in any Specifications for the Project onto the Project site without first obtaining the County's advance written approval. The Contractor shall ensure that any hazardous materials/waste or other materials/waste regulated by state, federal or local law that the Contractor, its Sub-contractors or their employees or agents bring onto or generate at the Project Site are handled in accordance with all applicable laws.

7.3 The Contractor shall pay all required material disposal fees and shall dispose of all materials in accordance with all applicable laws and regulations. The Contractor shall be responsible for all costs associated with improper disposal of materials, including any clean-up costs, fines or penalties, whether levied against the Contractor or the County.

7.4 The Contractor shall maintain and keep clean at all times the immediate approach to the Project site including the roads abutting the Project site.

8. PROTECTION AND RESTORATION OF PROPERTY AND LANDSCAPE

8.1 The Contractor shall be responsible for the preservation of all public and private property including but not limited to: mailboxes, crops, fish ponds, trees, monuments, highway signs and markers, fences, grassed and sodded areas, etc., along and adjacent to the highway, road or street, and shall use every precaution necessary to prevent damage or injury thereto, unless the removal, alteration or destruction of such property is provided for under this Contract.

8.2 When or where any direct or indirect damage or injury is done to public or private property by or on account of any act, omission, neglect or misconduct in the execution of the work or in consequence of the non-execution thereof by the Contractor, its shall restore, at its own expense, such property to a condition similar or equal to that existing before such damage or injury was done. The Contractor shall make good such damage or injury in an acceptable manner by repairing, rebuilding or otherwise restoring as may be directed by the CEI. The Contractor shall correct all disturbed areas in an acceptable manner before payment will be made.

ATTACHMENT B

BID COST FORM

Bidder shall complete the attached Bid Cost Form in Excel format

Please provide total cost for each item listed, including all costs, direct and indirect, administrative costs, and all things necessary for the Widening and Reconstruction of Jeffersonville Road from S.R. 3/Emery Hwy to Recreation Road and Millerfield Rd from Jeffersonville Rd to Bristol Dr, as specified in "Attachment A", Scope of Work.

LEGEND

ABBREVIATIONS	TITLE/MEANING
AGGR	Aggregate
ASPH	Asphalt
INCL	Include
H	Height
JCT	Junction
RECONSTR	Reconstruct
NONMETL	Nonmetal
STD	Standard
CONC	Concrete
REFL	Reflective
BITUM	Bituminous
MATL	Material
FDC	Fault Detection and Classification
TP	Type
PVMT	Pavement
IN	Inch
VDS	Video Distribution System
GBIC	Gigabit Interface Converter
GALV	Galvanized
ILLUM	Illuminate
REINF	Reinforce
REM	Removal
TRAF	Traffic
LS	Lump Sum
M2	Square Meter
LM1	Linear Meter
EA	Each
MG	Mega Gram
M3	Cubic Meter
HA	Hectare
L	Liter

L.I.N.	DOT Pay Item #	Item Description	Unit	Estimated Quantity	Unit Cost	Total Cost
PI# 342080 - ROADWAY ITEMS						
010	150-1000	TRAFFIC CONTROL - STP00-3223-00(004)	LS	LUMP		
015	150-5010	TRAFFIC CONTROL, PORTABLE IMPACT ATTN	EA	1		
020	207-0203	FOUND BKFILL MATL, TP II	M3	70		
025	210-0100	GRADING COMPLETE - STP00-3223-00(004)	LS	LUMP		
030	310-1101	GRADED AGGR BASE CRS, INCL MATL	M2	27600		
035	318-3000	AGGR SURF CRS	MG	400		
040	402-1812	RECYL AC LEVELING, INCL BM & HL	MG	900		
045	402-3121	RECYL AC 12.5 MM SP, GP 2 ONLY, INCL BM & HL	MG	3600		
050	402-3250	RECYL AC 25 MM SP, GP 1 OR 2, INC BM & HL	MG	8200		
055	402-3190	RECYL AC 19 MM SP, GP 1 OR 2, INCL BM & HL	MG	4100		
060	413-1000	BITUM TACK COAT	L	11300		
065	432-0206	MILL ASPH CONC PVMT, 40 MM DEPTH	M2	2000		
070	433-1000	REINF CONC APPROACH SLAB	M2	350		
075	441-0016	DIRIVEWAY CONCRETE, 150 MM THK	M2	130		
080	441-0018	DRIVEWAY CONCRETE , 200 MM THK	M2	210		

L.I.N.	DOT Pay Item #	Item Description	Unit	Estimated Quantity	Unit Cost	Total Cost
085	441-0104	CONC SIDEWALK, 100MM	M2	4600		
090	441-0108	CONC SIDEWALK, 200 MM	M2	1800		
095	411-0748	CONC MEDIAN, 150 MM	M2	50		
100	441-4020	CONC VALLEY GUTTER, 150 MM	M2	1600		
105	441-4030	CONC VALLEY GUTTER, 200 MM	M2	1000		
110	441-5002	CONC HEADER CURB, 150 MM, TP 2	LM1	350		
115	441-6222	CONC CRB & GTR, 200 MM X 750 MM, TP 2	LM1	3500		
120	446-1100	PVMT REF FAB STRIPS, TP2, 450 MM WIDTH	LM1	1907		
125	500-9999	CL B CONC, BASE OR PVMT WIDEN	M3	60		
130	500-3101	CL A CONC	M3	2		
135	500-3800	CL A CONC, INCL REINF STEEL	M3	2.00		
140	500-3900	CL B CONC, INCL REINF STEEL	M3	3.00		
145	550-1180	STM DR PIPR, 450 MM, H0.3-3 M	LM1	1600		
150	550-1240	STM DR PIPR, 600 MM, H0.3-3 M	LM1	400		
155	550-1300	STM DR PIPR, 750 MM, H0.3-3 M	LM1	170		

L.I.N.	DOT Pay Item #	Item Description	Unit	Estimated Quantity	Unit Cost	Total Cost
160	550-1360	STM DR PIPR, 900 MM, H0.3-3 M	LM1	450		
165	550-1420	STM DR PIPR, 1050 MM, H0.3-3 M	LM1	320		
170	550-1480	STM DR PIPE, 1200 MM, H0.3-3 M	LM1	40		
175	550-1600	STM DR PIPE, 1500 MM, H0.3-3 M	LM1	50		
180	550-2180	SIDE DR PIPE, 450 MM, H0.3-3 M	LM1	15		
185	550-3318	SAFETY END SECT 450 MM, STD, 4:1	EA	1		
190	550-4118	FLARED END SECT 450 MM, SIDE DRN	EA	2		
195	550-4218	FLARED END SECT 450 MM, STRM DRN	EA	2		
200	550-4224	FLARED END SECT 600 MM, STRM DRN	EA	4		
205	550-4230	FLARED END SECT 750 MM, STRM DRN	EA	1		
210	550-4236	FLARED END SECT 900 MM, STRM DRN	EA	1		
215	550-4242	FLARED END SECT 1050 MM, STRM DRN	EA	3		
220	603-2184	STN DUMPED RIP RAP, TP 3,750 MM	M2	170		
225	603-7000	PLASTIC FILTER FABRIC	M2	170		

L.I.N.	DOT Pay Item #	Item Description	Unit	Estimated Quantity	Unit Cost	Total Cost
230	611-3000	RECONSTR CATCH BASIN, GROUP 1	EA	1		
235	611-3010	RECONSTR DROP INLET, GROUP 1	EA	3		
240	611-3030	RECONSTR STORM SEWER MANHOLE, TP 1	EA	1		
245	634-1200	RIGHT OF WAY MARKERS	EA	148		
250	643-8200	BARRIER FENCE (ORANGE), 1.2 M	LM1	600		
255	641-1100	GUARDRAIL, TP T	LM1	25		
260	641-1200	GUARDRAIL, TP W	LM1	160		
265	641-5001	GUARDRAIL ANCHORAGE, TP 1	EA	7		
270	641-5012	GUARDRAIL ANCHORAGE, TP 12	EA	3		
275	668-1100	CATCH BASIN, GP 1	EA	63		
280	668-1110	CATCH BASIN, GP 1, ADDL DEPTH	LM1	6		
285	668-1200	CATCH BASIN, GP 2	EA	5		
290	668-1210	CATCH BASIN, GP 2, ADDL DEPTH	LM1	3.5		
295	668-2100	DROP INLET, GP 1	EA	22		
300	668-2110	DROP INLET, GP 1, ADDL DEPTH	LM1	1.0		

L.I.N.	DOT Pay Item #	Item Description	Unit	Estimated Quantity	Unit Cost	Total Cost
305	668-2200	DROP INLET, GP 2	EA	1		
310	668-2210	DROP INLET, GP 2, ADDL DEPTH	LM1	1.0		
315	668-4300	STROM SEWER MANHOLE, TP 1	EA	10		
320	668-4311	STORM SEWER MANHOLE, TP 1, A DEP, CL 1	LM1	4		
325	668-4400	STROM SEWER MANHOLE, TP 2	EA	1		
330	668-4411	STORM SEWER MANHOLE, TP 2, A DEP, CL 1	LM1	2.5		
335	667-7018	DRAIN INLET, 450 MM	EA	7		
PI# 342080 - EROSION CONTROL ITEMS						
340	160-0232	TEMPORARY GRASSING	HA	3.00		
345	163-0240	MULCH	MG	75		
350	163-0300	CONSTRUCTION EXIT	EA	2		
355	163-0503	CONSTR AND REMOVE SILT CONTROL GATE TP 3	EA	3		
360	163-0527	CNST/ REM RIP RAP CKDEM, STN P RIPRAP/ SN BG	EA	95		
365	163-0550	CONS & REM INLET SEDIMENT TRAP	EA	96		
370	165-0010	MAINT OF TEMPORARY SILT FENCE, TP A	LM1	1850		
375	165-0030	MAINT OF TEMP SILT FENCE, TP C	LM1	600		

L.I.N.	DOT Pay Item #	Item Description	Unit	Estimated Quantity	Unit Cost	Total Cost
380	165-0041	MAINT OF CHECK DAMS - ALL TYPES	LM1	34		
385	165-0087	MAINT OF SILT CONTROL GATE, TP 3	EA	3		
390	165-0101	MAINT OF CONSTRUCTION EXIT	EA	2		
395	165-0105	MAIN OF INLET SEDIMENT TRAP	EA	96		
400	167-1000	WATER QUALITY MONITORING AND SAMPLING	EA	4		
405	167-1500	WATER QUALITY INSPECTIONS	MO	24		
410	171-0010	TEMPORARY SILT FENCE, TYPE A	LM1	3700		
415	171-0030	TEMPORARY SILT FENCE, TYPE C	LM1	1200		
420	700-6910	PERMANENT GRASSING	HA	6		
425	700-7000	AGRICULTURAL LIME	MG	40		
430	700-8000	FERTILIZER MIXED GRADE	MG	10		
435	700-8100	FERTILIZER NITROGEN CONTENT	KG	330		
440	716-2000	EROSION CONTROL MATS, SLOPES	M2	4500		

L.I.N.	DOT Pay Item #	Item Description	Unit	Estimated Quantity	Unit Cost	Total Cost
PI# 342080 - SIGNING AND MARKING ITEMS						
445	636-1033	HWY SIGNS, TP1 MAT REFL SH TP 9	M2	13.4		
450	636-1036	HWY SIGNS, TP1 MAT REFL SH TP 11	M2	23.0		
455	636-2070	GALV STELL POSTS, TP 7	LM1	20		
460	636-2080	GALV STELL POSTS, TP 8	LM1	95		
465	653-0120	THERM PVMT MARK, ARROW, TP 2	EA	36		
470	653-0130	THERM PVMT MARK, ARROW, TP 3	EA	2		
475	653-0210	THERM PVMT MARK, ARROW, TP 1	EA	4		
480	653-1501	THERM SLD TRF STIPE, 125 MM, WHITE	LM1	8868		
485	653-1502	THERM SLD TRF STIPE, 125 MM, YELLOW	LM1	8816		
490	653-1704	THERM SLD TRF STIPE, 600 MM, WHITE	LM1	91		
495	653-1804	THERM SLD TRF STIPE, 200 MM, WHITE	LM1	1204		
500	065-3501	THERM SLD TRF STIPE, 125 MM, WHITE	GLM1	2734		
505	653-3502	THERM SLD TRF STIPE, 125 MM, YELLOW	GLM1	1535		

L.I.N.	DOT Pay Item #	Item Description	Unit	Estimated Quantity	Unit Cost	Total Cost
510	653-6004	THERM TRAP STIPING, WHITE	M2	2326		
515	653-6006	THERM TRAP STIPING, YELLOW	M2	1728		
520	654-1001	RAISED PVMT MARKERS TP 1	EA	297		
525	654-1003	RAISED PVMT MARKERS TP 3	EA	272		
530	657-1085	PRF PL S PMT MG, 200 MM, B/W, TP PB	LM1	200		
535	657-3085	PRF PL SK PMT MG, 200 MM, B/W, TP PB	GLM1	200		
540	657-3086	PRF PL SK PMT MG, 200 MM, B/Y, TP PB	GLKM	200		
545	657-6085	PRF PL S PMT MG, 200 MM, B/Y, TP PB	LM1	200		
PI# 342080 - TRAFFIC SIGNAL ITEMS						
550	636-1045	HWY SIGNS, TP2 MAT REFL SH TP 11	M2	5.1		
555	636-2002	STEEL WIRE STRND CABLE, 9.53 MM	LM1	190		
560	639-4003	STRAIN POLE, TP III	EA	6		
565	639-5000	PRESTRESSED CONC STR POLE, TP	EA	1		
570	647-1000	TRAF SINGAL INSTALLATION NO 1 - MILLERFIELD RD	LS	1		

L.I.N.	DOT Pay Item #	Item Description	Unit	Estimated Quantity	Unit Cost	Total Cost
575	682-6233	CONDUIT, NONMETAL, TP 3, 50 MM	LM1	90		
580	682-9950	DIRECTIONAL BORE - 75 MM	LM1	70		
585	682-9950	DIRECTIONAL BORE - 125 MM	LM1	20		
590	687-1000	TRAFFIC SIGNAL TIMINT - SIGNAL TIMING @ MILLERFIELD RD	LS	LUMP		
595	926-0000	SEC 926 - WIRELESS COMMUNICATION EQUIP	LS	LUMP		
PI# 342080 - LIGHTING ITEMS						
600	681-4453	LT STD, 1.7 M MH, 3.7 M ARM	EA	71		
605	681-6318	LUMINAIRE, TP 3, 150 W LED	EA	71		
610	682-3424	MULT CD CBL, TP RHW, 2-#2-1-#4	LM1	976		
615	682-3446	MULT CD CBL, TP RHW, 2-#4-1-#6	LM1	3900		
620	682-1511	CABLE, TP RHH/RHW, AWG NO 1/0	LM1	65		
625	682-6120	CONDUIT, RIGID, 50 MM	LM1	21		
630	682-6222	CONDUIT, NONMETAL, TP 2, 50 MM	LM1	90		
635	682-6233	CONDUIT, NONMETAL, TP 3, 50 MM	LM1	278		

L.I.N.	DOT Pay Item #	Item Description	Unit	Estimated Quantity	Unit Cost	Total Cost
640	682-8500	ELECTICAL PWR SVC ASSEMBLEY (AERIAL SERVICE POINT)	LS	LUMP		
645	682-9021	ELEC JCT BX, CONC GRD MOUNTED	EA	6		
650	682-9023	ELEC JCT BX, GALVANIZED, SIZE -	EA	4		
655	682-9950	DIRECTIONAL BORE - 100 MM	LM1	805		
PI# 342080 - LANDSCAPE ITEMS						
660	702-0425	ILEX OPACA CROONENBERG - 'MISS HELEN' - (AMERICAN HOLLY)	EA	9		
665	702-0886	QUERCUS LYRATA - OVERCUP OAK	EA	125		
670	702-9025	LANDSCAPE MULCH	M2	167		
PI# 342080 SUB-TOTAL CONTRACT BID COST:						

L.I.N.	DOT Pay Item #	Item Description	Unit	Estimated Quantity	Unit Cost	Total Cost
PI# 351095 - BRIDGE NO. 1 ITEMS						
675	211-0300	BRIDGE EXCAV, STREAM CROSSING	M3	1120		
680	500-0100	GROOVED CONCRETE	M3	1674		
685	500-1006	SUPERSTR CONCRETE, CL AA, BRIDGE NO - 1 (750)	LUMP	LUMP		
690	500-3002	CLASS AA CONCRETE	M3	618		
695	500-3700	SEAL CONC	M3	397		
700	501-2000	STRUCTURAL STEEL	KG	2605		
705	507-9030	PCS BEAMS, AASHTO, BULB TEE, 1370 MM, BR NO - 1	LM1	913		
710	511-1000	BAR REINF STEEL	KG	52172		
715	511-3000	SPUERSTR REINF STEEL, BR NO - 1 (78333)	LS	LUMP		
720	516-1100	ALUM HANDRAIL, STD 3626	LM1	182		
725	520-1147	PILING IN PLACE, STEEL H, HP 360 X 108	LM1	235		
730	520-4147	LOAD TEST, STEEL H, HP 360 X 108	EA	1		
735	520-5000	PILOT HOLES	LM1	127		
740	524-0010	DRILLED CAISSON - 1500 MM	LM1	74		

L.I.N.	DOT Pay Item #	Item Description	Unit	Estimated Quantity	Unit Cost	Total Cost
745	525-1000	COFFERDAM	EA	8		
750	540-1101	REMOVAL OF EXISTING BR, STA 2+180	LS	LUMP		
755	603-2024	STN DUMPED RIP RAP, TP 1 600 MM	M2	930		
760	603-7000	PLASTIC FILTER FABRIC	M2	930		
765	620-0100	PRECAST CONC MEDIAN BARRIER, METHOD 1	M	254		
PI# 351095 SUB-TOTAL CONTRACT BID COST:						

L.I.N.	DOT Pay Item #	Item Description	Unit	Estimated Quantity	Unit Cost	Total Cost
PI# 351090 - ROADWAY ITEMS						
770	150-1000	TRAFFIC CONTROL - 1 - STP00-3223-00(004)	LS	LUMP		
775	150-5010	TRAFFIC CONTROL, PORTABLE IMPACT ATTN	EA	1		
780	207-0203	FOUNF BKFILL MATL, TP II	M3	100		
785	210-0100	GRADING COMPLETE - 1 - STP00-3223-00(004)	LS	LUMP		
790	310-1101	GRADED AGGR BASE CRS, INCL MATL	MG	11500		
795	318-3000	AGGR SURF CRS	MG	631		
800	402-1812	RECYCLED ASPH CONC LEVELING, INCL BITUM MATL & H LIME	MG	330		
805	402-3121	RECYCLED ASPH CONC 12.5 MM SUPERPAVE, GP 2 ONLY, INCL BITUM MATL & H LIME	MG	1900		
810	402-3190	RECYCLED ASPH CONC 19 MM SUPERPAVE, GP 1 OR 2, INCL BITUM MATL & H LIME	MG	1700		
815	402-3250	RECYCLED ASPH CONC 25 MM SUPERPAVE, GP 1 OR 2, INCL BITUM MATL & H LIME	MG	3450		
820	413-1000	BITUM TACK COAT	L	5200		
825	432.0206	MILL ASPH CONC PVMT, 40 MM DEPTH	M2	4000		
830	441-0016	DRIVEWAY CONCRETE, 150 MM THK	M2	300		
835	441-0018	DRIVEWAY CONCRETE, 200 MM THK	M2	25		

L.I.N.	DOT Pay Item #	Item Description	Unit	Estimated Quantity	Unit Cost	Total Cost
840	441-0020	CONC VALLEY GUTTER, 100 MM	M2	2400		
845	441-0104	CONC SIDEWALK, 200 MM	M2	730		
850	441-0108	CONC SIDEWALK, 200 MM	M2	730		
855	441-0748	CONCRETE MEDIAN, 150 MM	M2	280		
860	441-4030	CONC VALLEY GUTTER, 200 MM	M2	270		
865	441-6222	CONC CURB & GUTTER, 200 MM X 750 MM, TP 7	LM1	160		
870	441-6720	CONC CURB & GUTTER, 150 MM X 750 MM, TP 2	LM1	1650		
875	446-1100	PAVEMENT REINF FABRIC STRIPS, TP 2, 450 MM WIDTH	LM1	925		
880	500-3800	CLASS A CONC, INCL REINF STEEL	M3	20		
885	500-3900	CLASS B CONC, INCL REINF STEEL	M3	15		
890	500-9999	CLASS B CONC, BASE OR PVMT WIDENING	M3	60		
895	550-1180	STORM DRAIN PIPE, 450 MM, H0.3-3 M	LM1	850		
900	550-1240	STORM DRAIN PIPE, 600 MM, H0.3-3 M	LM1	200		
905	550-1300	STORM DRAIN PIPE, 750 MM, H0.3-3 M	LM1	170		
910	550-1360	STORM DRAIN PIPE, 900 MM, H0.3-3 M	LM1	140		

L.I.N.	DOT Pay Item #	Item Description	Unit	Estimated Quantity	Unit Cost	Total Cost
915	550-1480	STORM DRAIN PIPE, 1200 MM, H0.3-3 M	LM1	10		
920	550-1600	STORM DRAIN PIPE, 1500 MM, H0.3-3 M	LM1	50		
925	550-1601	STORM DRAIN PIPE, 1500 MM, H0.3-4.5 M	LM1	80		
930	550-2180	SIDE DRAIN PIPE, 450 MM, H0.3-3 M	LM1	15		
935	550-4118	FLARED END SECTION, 450 MM, SIDE DRAIN	EA	4		
940	603-2184	STN DUMPED RIP RAP, TP 3, 750 MM	M2	40		
945	603-7000	PLASTIC FILTER FABRIC	M2	40		
950	611-3030	REC STORM SEW MANHOLE, TP 1	EA	1		
955	611-3100	RECONSTR JUNCTION BOX	EA	1		
960	611-8000	ADJUST CATCH BASIN TO GRADE	EA	1		
965	620-0100	TEMP BARRIER, METHOD NO. 1	LM1	50		
970	634-1200	RIGHT OF WAY MARKERS	EA	42		
975	643-8200	BARRIER FENCE, (ORANGE) 1.2 M	LM1	575		
980	668-1100	CATCH BASIN, GP 1	EA	24		
985	668-1110	CATCH BASIN, GP 1, ADDL DEPTH	LM1	5.3		

L.I.N.	DOT Pay Item #	Item Description	Unit	Estimated Quantity	Unit Cost	Total Cost
990	668-1200	CATCH BASIN, GP 2	EA	1		
995	668-1210	CATCH BASIN, GP 2, ADDL DEPTH	LM1	1.7		
1000	668-2100	DROP INLET, GP 1	EA	14		
1005	668-2110	DROP INLET, GP 1, ADDL DEPTH	LM1	0.9		
1010	668-4300	STORM SEWER MANHOLE, TP 1	EA	3		
1015	668-4311	STORM SEWER MANHOLE, TP 1, ADDITIONAL DEPTH	LM1	5		
1020	668-7018	DRAIN INLET, 450 MM	EA	3		
PI# 351090 - EROSION CONTROL ITEMS						
1025	163-0232	TEMPORARY GRASSING	HA	1.49		
1030	163-0240	MULCH	MG	89		
1035	163-0300	CONSTRUCTION EXIT	EA	5		
1040	163-0502	CONSTR AND REMOVE SILT CONTROL GATE, TP 2	EA	2		
1045	163-0503	CONSTR AND REMOVE SILT CONTROL GATE, TP 3	EA	1		
1050	163-0527	CONSTRUCT AND REMOVERIP RAP CHECK DAM - STN P RIPRAP/SN BG	EA	15		
1055	163-0550	CONSTRUCT AND REMOVE INLET SEDIMENT TRAP	EA	40		

L.I.N.	DOT Pay Item #	Item Description	Unit	Estimated Quantity	Unit Cost	Total Cost
1060	165-0010	MAINTENANCE OF TEMPORARY SILT FENCE, TP A	LM1	650		
1065	165-0030	MAINTENANCE OF TEMPORARY SILT FENCE, TP C	LM1	400		
1070	165-0041	MAINTENANCE OF CHECK DAMS - ALL TYPES	LM1	46		
1075	165-0086	MAINTENANCE OF SILT CONTROL GATE, TP 2	EA	2		
1080	165-0087	MAINTENANCE OF SILT CONTROL GATE, TP 3	EA	1		
1085	165-0101	MAINTENANCE OF CONST EXIT	EA	5		
1090	165-0105	MAINTENANCE OF INLET SEDIMENT TRAP	EA	40		
1095	167-1000	WATER QUALITY MONITORING AND SAMPLING	EA	2		
1100	167-1500	WATER QUALITY INSPECTIONS	MO	24		
1105	171-0010	TEMPORARY SILT FENCE, TYPE A	LM1	1300		
1110	171-0030	TEMPORARY SILT FENCE, TYPE C	LM1	800		
1115	700-6910	PERMANENT GRASSING	HA	2.99		
1120	700-7000	AGRICULTURAL LIME	MG	20		
1125	700-8000	FERTILIZER MIXED GRADE	MG	6		

L.I.N.	DOT Pay Item #	Item Description	Unit	Estimated Quantity	Unit Cost	Total Cost
1130	700-8100	FERTILIZER NITROGEN CONTENT	KG	168		
1135	716-2000	EROSION CONTROL MATS, SLOPES	M2	3245		
PI# 351090 - SIGNING AND MARKING ITEMS						
1140	636-1033	HWY SIGNS, TP 1 MATL, REFL SHEETING, TP 9	M2	11		
1145	636-1036	HWY SIGNS, TP 1 MAT, REFL SHEETING, TP 11	M2	11.4		
1150	636-2070	GALV STEEL POSTS, TP 7	LM1	16		
1155	636-2080	GALV STEEL POSTS, TP 8	LM1	67		
1160	653-0110	THERM PVMT MARKING, ARROW, TP 1	EA	3		
1165	653-0120	THERM PVMT MARKING, ARROW, TP 2	EA	15		
1170	653-0210	THERM PVMT MARKING, WORD, TP 1	EA	6		
1175	653-1501	THERM SLD TRF STRIPE, 125 MM, WHITE	LM1	2438		
1180	653-1502	THERM SLD TRF STRIPE, 125 MM, YELLOW	LM1	1639		
1185	653-1704	THERM SLD TRF STRIPE, 600 MM, WHITE	LM1	57		
1190	653-1804	THERM SLD TRF STRIPE, 600 MM, YELLOW	LM1	741		
1195	653-3501	THERM SKIP TRAF STRIPE, 125 MM, WHITE	GLM1	1656		

L.I.N.	DOT Pay Item #	Item Description	Unit	Estimated Quantity	Unit Cost	Total Cost
1200	653-3502	THERM SKIP TRAF STRIPE, 125 MM,YELLOW	GLM1	1228		
1205	653-6004	THERM TRAF STRIPING, WHITE	M2	110		
1210	653-6006	THERM TRAF STRIPING, YELLOW	M2	145		
1215	654-1001	RAISED PVMT MARKERS TP 1	EA	69		
1220	654-1003	RAISED PVMT MARKERS TP 3	EA	139		
PI# 351090 - TRAFFIC SIGNAL ITEMS						
1225	636-1045	HWY SIGNS, TP 2 MAT, REFL SHEETING, TP 11	M2	6.3		
1230	639-2002	STEEL WIRE STRAND CABLE, 9.53 MM	LM1	53.0		
1235	639-5000	PRESTRESSED CONC STR POLE, TP-	EA	4		
1240	647-1000	TRAF SIGNAL INSTALLATION NO 1 - EMERY HWY	LS	LUMP		
1245	682-1408	CABLE, TP XHHW,AWG NO 2	LM1	31		
1250	682-6222	CONDUIT, NONMETL, TP 2, 50 MM	LM1	29		
1255	682-6233	CONDUIT, NONMETL, TP 3, 50 MM	LM1	50		
1260	687-1000	TRAF SIGNAL TIMING - SIGNAL TIMING @ EMERY HWY	LS	LUMP		
1265	926-0000	SEC 926 - WIRELESS COMMUNICATION EQUIP	LS	LUMP		

L.I.N.	DOT Pay Item #	Item Description	Unit	Estimated Quantity	Unit Cost	Total Cost
1270	935-1513	OUT PLNT FIBER OPT CBL, DROP, SM 24 FIBER	LM1	27		
1275	999-3800	RECTANGULAR RAPID BEACON ASSY	EA	2		
PI# 351090 - LIGHTING ITEMS						
1280	681-4453	LT STD, 13.7 M MH, 3.7 ARM	EA	40		
1285	681-6318	LUMINAIRE, TP 3, 150 W, LED	EA	40		
1290	682-1509	CABLE, TP RHH/RHW, AWG NO 2	LM1	32		
1295	682-3468	MULT CD CBL, TP RHW, 2-#6-1-#8	LM1	665		
1300	682-6120	CONDUIT, RIGID, 50 MM	LM1	20		
1305	682-8500	ELECTRICAL PWR SVC ASSEMBLY, (AERIAL SERVICE POINT)	EA	1		
1310	682-9021	ELEC JCT BX, CONC GRD MOUNTED	EA	18		
1315	682-9950	DIRECTIONAL BORE - 100 MM	LM1	333		
PI# 351090 - LANDSCAPE ITEMS						
1320	702-0159	CHIONANTHUS VIRGINICUS - WHITE FRINGTREE	EA	4		
1325	702-0030	ACER RUBRUM - RED MAPLE	EA	1		
1330	702-0180	CORNUS FLORIDA - DOGWOOD	EA	2		

L.I.N.	DOT Pay Item #	Item Description	Unit	Estimated Quantity	Unit Cost	Total Cost
1335	702-0425	ILEX OPOACA CROONENBERG - AMERICAN HOLLY	EA	9		
1340	702-0520	JUNIPERUS VIRGINIANA - RED CEDAR	EA	3		
1345	702-0785	PINUS TAEDA - LOBLOLLY	EA	1		
1350	702-0886	QUERCUS LYRATA - OVERCUP OAK	EA	38		
1355	702-9025	LANDSCAPE MULCH	M2	84		
PI# 0004638 SUB-TOTAL CONTRACT BID COST:						
	TOTAL CONTRACT BID COST:					

(Signature) (Printed Name)

This _____ day of _____ , 2017.

ADDITIVE ITEMS:

L.I.N.	DOT Pay Item #	Item Description	Unit	Estimated Quantity	Unit Cost	Total Cost
PI# 342080 - WATER & SEWER ITEMS						
1360	600-0001	FLOWABLE FILL	CY	447		
1365	660-0008	SAN SEWER PIPE, 8 IN, PVC	LF	335		
1370	660-1150	CUT & PLUG EXIST SEWER MAIN	EA	2		
1375	660-2042	SEWER LATERAL, 4 IN	LF	600		
1380	660-2043	SEWER LATERAL, 6 IN	LF	600		
1385	668-3300	SAN SEW MANHOLE, TP 1	EA	5		
1390	668-3311	SAN SEW MANHOLE, TP 1, ADDL DEPTH, CL 1	LF	4		
1395	670-1060	WATER MAIN, 6 IN	LF	1333		
1400	670-1080	WATER MAIN, 8 IN	LF	20		
1405	670-1120	WATER MAIN, 12 IN	LF	2898		
1410	670-1160	WATER MAIN, 16 IN	LF	4129		
1415	670-1600	CUT & PLUG EXIST WATER MAIN	EA	14		
1420	670-2060	GATE VALVE, 6 IN	EA	18		
1425	670-2080	GATE VALVE, 8 IN	EA	4		

L.I.N.	DOT Pay Item #	Item Description	Unit	Estimated Quantity	Unit Cost	Total Cost
1430	670-2120	GATE VALVE, 12 IN	EA	21		
1435	670-2160	GATE VALVE, 16 IN	EA	23		
1440	670-2700	ABANDONMENT OF WATER VALVES	EA	20		
1445	670-4000	FIRE HUDRANT	EA	21		
1450	670-5010	WATER SERVICE LINE, 1 IN	LF	250		
1455	670-5015	WATER SERVICE LINE, 1 1/2 IN	LF	50		
1460	670-5020	WATER SERVICE LINE, 2 IN	LF	150		
1465	670-5622	WATER SERVICE LINE, 5/8 IN	LF	4000		
1470	670-9245	STEEL CASING, 12 IN	LF	455		
1475	670-9255	STEEL CASING, 16 IN	LF	63		
1480	670-9260	STEEL CASING, 18 IN	LF	301		
1485	670-9275	STEEL CASING, 24 IN	LF	181		
1490	670-9730	RELOCATE X WATER METER, INC BOX	EA	67		
1495	670-9920	REMOVE EXIST FIRE HYDRANT	EA	8		
PI# 342080 SUB-TOTAL <u>ADDITIVE</u> BID COST:						

L.I.N.	DOT Pay Item #	Item Description	Unit	Estimated Quantity	Unit Cost	Total Cost
PI# 351090 - WATER & SEWER ITEMS						
1500	600-0001	FLOWABLE FILL	CY	113		
1505	615-1000	JACK OR BORE PIPE - 24 - INCH DIA	LF	95		
1510	660-0008	SAN SEWER PIPE, 8 IN, PVC	LF	167		
1515	660-1150	CUT & PLUG EXIST SEWER MAIN	EA	1		
1520	660-2042	SEWER LATERAL, 4 IN	LF	200		
1525	660-2043	SEWER LATERAL, 6 IN	LF	200		
1530	660-3275	ABANDONED MANHOLE	EA	2		
1535	668-3300	SAN SEWER MANHOLE, TP 1	EA	2		
1540	668-3311	SS MANHOLE, TP 1,A DEPTH, CL 1	EA	2		
1545	670-1060	WATER MAIN, 6 IN	LF	595		
1550	670-1080	WATER MAIN, 8 IN	LF	135		
1555	670-1160	WATER MAIN, 16 IN	LF	2910		
1560	670-1600	CUT & PLUG EXIST WATER MAIN	EA	3		
1565	670-2060	GATE VALVE, 6 IN	EA	7		
1570	670-2080	GATE VALVE, 8 IN	EA	4		

L.I.N.	DOT Pay Item #	Item Description	Unit	Estimated Quantity	Unit Cost	Total Cost
1575	670-2120	GATE VALVE, 12 IN	EA	1		
1580	670-2160	GATE VALVE, 16 IN	EA	15		
1585	670-2700	ABANDONMENT OF WATER VALVES	EA	5		
1590	670-3015	TAPPING SLV/VALVE ASMBLY, -	EA	1		
1595	670-4000	FIRE HYDRANT	EA	10		
1600	670-5010	WATER SERVICE LINE, 1 IN	LF	100		
1605	670-5015	WATER SERVICE LINE, 1 1/2 IN	LF	80		
1610	670-5622	WATER SERVICE LINE, 5/8 IN	LF	1000		
1615	670-9245	STEEL CASING, 12 IN	LF	195		
1620	670-9255	STEEL CASING, 16, IN	LF	72		
1625	670-9275	STEEL CASING, 24, IN	LF	96		
1630	670-9730	RELOCATE X WATER METER, INC BOX	EA	28		
1635	670-9920	REMOVE EXIST FIRE HYDRANT	EA	3		
PI# 351090 SUB-TOTAL <u>ADDITIVE</u> BID COST:						

	TOTAL ADDITIVE BID COST:	

(Signature) (Printed Name)

This _____ day of _____, 2017.

Note: If the additive item for water and sewer work is not awarded, Macon Water Authority will contract for water and sewer work by separate contract. The Contractor shall coordinate and cooperate with the separate Macon Water Authority contractor for all water and sewer work similar to the requirements for other utility relocation.

EXHIBIT "A"

DEPARTMENT OF TRANSPORTATION
STATE OF GEORGIA

FEDERAL AID CERTIFICATION

(English Project)

First Use Date 2013 Specifications: November 22, 2013
Revised: June 8, 2016

Failure to complete appropriate certification requirements identified below or submission of a false certification shall render the bid non-responsive.

EQUAL EMPLOYMENT OPPORTUNITY

I further certify that I have ___/have not ___ participated in a previous contract or subcontract subject to the equal opportunity clause, as required by Executive Orders 10925, 11114, or 11246, and that I have ____ / have not___ filed with the Joint Reporting Committee, the Director of the *Office of Federal Contract Compliance,* a Federal Government contracting or administering agency, or the former *President's Committee on Equal Employment Opportunity,* all reports due under the applicable filing requirements.

I understand that if I have participated in a previous Contract or Subcontract subject to the Executive Orders above and have not filed the required reports that 41 CFR 60-1.7(b)(1) prevents the award of this Contract unless I submit a report governing the delinquent period or such other period specified by the Federal Highway Administration or by the Director, Office of Federal Contract Compliance, U. S. Department of Labor.

Reports and notifications required under 41 CFR 604, including reporting subcontract awards in excess of $10,000.00 should be addressed to:

Ms. Carol Gaudin
Regional Director, U. S. Department of Labor
Office of Federal Contract Compliance Programs, Region 4
Rm. 7B75
61 Forsyth St. SW
Atlanta GA 30303

EXAMINATION OF PLANS AND SPECIFICATIONS

I acknowledge that this Project will be constructed in English units.

I certify that I have carefully examined the Plans for this Project and the Standard Specifications 2013 Edition, Supplemental Specifications and Special Provisions included in and made a part of this Proposal, and have also personally examined the site of the work. On the basis of the said Specifications and Plans, I propose to furnish all necessary machinery, tools, apparatus and other means of construction, and do all the work and furnish all the materials in the manner specified.

I understand the quantities mentioned are approximate only and are subject to either increase or decrease and hereby propose to perform any increased or decreased quantities of work or extra work on the basis provided for in the Specifications.

I also hereby agree that the State, or the Department of Transportation, would suffer damages in a sum equal to at least the amount of the enclosed Proposal Guaranty, in the event my Proposal should be accepted and a Contract tendered me thereunder and I should refuse to execute same and furnish bond as

herein required, in consideration of which I hereby agree that, in the event of such failure on my part to execute said Contract and furnish bond within fifteen (15) days after the date of the letter transmitting the Contract to me, the amount of said Proposal Guaranty shall be and is hereby, forfeited to the State, or to the Department of Transportation, as liquidated damages as the result of such failure on my part.

I further propose to execute the Contract agreement described in the Specifications as soon as the work is awarded to me, and to begin and complete the work within the time limit provided. I also propose to furnish a Contract Bond, approved by the State Transportation Board, as required by the laws of the State of Georgia. This bond shall not only serve to guarantee the completion of the work on my part, but also to guarantee the excellence of both workmanship and materials until the work is finally accepted, as well as to fully comply with all the laws of the State of Georgia.

CONFLICT OF INTEREST

By signing and submitting this Contract I hereby certify that employees of this company or employee of any company supplying material or subcontracting to do work on this Contract will not engage in business ventures with employees of the Georgia Department of Transportation (GA D.O.T.) nor shall they provide gifts, gratuities, favors, entertainment, loans or other items of value to employees of this department.

Also, by signing and submitting this Contract I hereby certify that I will notify the Georgia Department of Transportation through its District Engineer of any business ventures entered into between employees of this company or employees of any company supplying material or subcontracting to do work on this Contract with a family member of GA D.O.T. employees.

DRUG FREE WORKPLACE

The undersigned certifies that the provisions of Code Sections 50-24-1 through 50-24-6 of the Official Code of Georgia Annotated, relating to the "Drug-free Workplace Act", have been complied with in full. The undersigned further certifies that:

(1) A drug-free workplace will be provided for the Contractor's employees during the performance of the Contract; and

(2) Each Contractor who hires a Subcontractor to work in a drug-free workplace shall secure from that Subcontractor the following written certification:

"As part of the subcontracting agreement with _____(Contractor's name)_____, (Subcontractor's name) certifies to the Contractor that a drug free workplace will be provided for the Subcontractor's employees during the performance of this Contract pursuant to paragraph (7) of subsection (b) of Code Section 50-24-3."

Also, the undersigned further certifies that he will not engage in the unlawful manufacture, sale distribution, dispensation, possession, or use of a controlled substance or marijuana during the performance of the Contract.

BOYCOTT OF ISRAEL

By signing and submitting this Contract and Pursuant to O.C.G.A. Sec. 50-5-85, CONTRACTOR hereby certifies that it is not currently engaged in, and agrees that for the duration of this contract, it will not engage in a boycott of Israel.

DEPARTMENT OF TRANSPORTATION
STATE OF GEORGIA

NON-COLLUSION CERTIFICATION

I hereby certify that I have not, nor has any member of the firm(s) or corporation(s), either directly or indirectly entered into any agreement, participated in any collusion, nor otherwise taken any action in restraint of free competitive bidding in connection with this submitted bid.

It is understood and agreed that this Proposal is one of several competitive bids made to the Department of Transportation, and in consideration of mutual agreements of the bidders, similar hereto, and in consideration of the sum of One Dollar cash in hand paid, receipt whereof is hereby acknowledged, the undersigned agrees that this Proposal shall be an option, which is hereby given by the undersigned to the Department of Transportation to accept or reject this Proposal at any time within thirty (30) calendar days from the date on which this sealed proposal is opened and read, unless a longer period is specified in the Proposal or the successful bidder agrees in writing to a longer period of time for the award, and in consideration of the premises, it is expressly covenanted and agreed that this Proposal is not subject to withdrawal by the Proposer or Bidder, during the term of said option.

I hereby acknowledge receipt of the following checked amendments of the Proposal, Plans, Specifications and/or other documents pertaining to the Contract.

Amendment Nos.: 1____2____3____4____5____. I understand that failure to confirm the receipt of amendments is cause for rejection of bids.

Witness my hand and seal this the _____ day of _____, 20_____.

The bidder(s) whose signature(s) appear on this document, having personally appeared before me, and being duly sworn, deposes and says that the above statements are true and correct.

Sworn to and subscribed before me this _____ day of _____, 20_____.

_____
(Notary Public)

My Commission expires the _____day of _____, 20_____.

_____
(Federal ID No./IRS No.)

_____
(Print Company Name)

By _____(Seal)
Corporate President/Vice President or Individual Owner or Partner (Strike through all except the one which applies.)

Joint Bidder:

_____
(Print Company Name)

By _____(Seal)
Corporate President/Vice President or Individual Owner or Partner (Strike through all except the one which applies.)

Joint Bidder:

_____
(Print Company Name)

By _____(Seal)
Corporate President/Vice President or or Individual Owner or Partner (Strike through all except the one which applies.)

EXHIBIT "B"

NOTICE TO ALL BIDDERS

ALL BIDDERS SUBMITTING BIDS IN EXCESS OF $2,000,000 SHALL BE PRE-QUALIFIED WITH THE GEORGIA DEPARTMENT OF TRANSPORTATION (GDOT).

ALL BIDDERS SUBMITTING BIDS $2,000,000 OR LESS SHALL BE EITHER A PRE-QUALIFIED CONTRACTOR OR A REGISTERED SUB-CONTRACTOR WITH THE GDOT.

SUB-CONTRACTORS SHALL BE PRE-QUALIFIED OR REGISTERED WITH THE GDOT.

IF CONSTRUCTION WORK INVOLVES WELDED STRUCTURES, SUCH AS BRIDGES, THE MANUFACTURER OF THE STRUCTURE SHALL BE ON THE GDOT QPL LIST 60.

To report bid rigging activities call:

1-800-424-9071

The U.S. Department of Transportation (DOT) operates the above toll-free "hotline" Monday through Friday, 8:00 AM to 5:00 PM, Eastern Time. Anyone with the knowledge of possible bid rigging, bidder collusion, or other fraudulent activities should use the "hotline" to report such activities.

The "hotline" is part of the DOT's continuing effort to identify and investigate highway construction contract fraud and abuse, and is operated under the directions of the DOT Inspector General. All information will be treated confidentially and caller anonymity will be respected.

EXHIBIT "C"

FHWA-1273 -- Revised May 1, 2012

REQUIRED CONTRACT PROVISIONS
FEDERAL-AID CONSTRUCTION CONTRACTS

I. General
II. Nondiscrimination
III. Nonsegregated Facilities
IV. Davis-Bacon and Related Act Provisions
V. Contract Work Hours and Safety Standards Act Provisions
VI. Subletting or Assigning the Contract
VII. Safety: Accident Prevention
VIII. False Statements Concerning Highway Projects
IX. Implementation of Clean Air Act and Federal Water Pollution Control Act
X. Compliance with Governmentwide Suspension and Debarment Requirements
XI. Certification Regarding Use of Contract Funds for Lobbying

ATTACHMENTS

A. Employment and Materials Preference for Appalachian Development Highway System or Appalachian Local Access Road Contracts (included in Appalachian contracts only)

I. GENERAL

1. Form FHWA-1273 must be physically incorporated in each construction contract funded under Title 23 (excluding emergency contracts solely intended for debris removal). The contractor (or subcontractor) must insert this form in each subcontract and further require its inclusion in all lower tier subcontracts (excluding purchase orders, rental agreements and other agreements for supplies or services).

The applicable requirements of Form FHWA-1273 are incorporated by reference for work done under any purchase order, rental agreement or agreement for other services. The prime contractor shall be responsible for compliance by any subcontractor, lower-tier subcontractor or service provider.

Form FHWA-1273 must be included in all Federal-aid design-build contracts, in all subcontracts and in lower tier subcontracts (excluding subcontracts for design services, purchase orders, rental agreements and other agreements for supplies or services). The design-builder shall be responsible for compliance by any subcontractor, lower-tier subcontractor or service provider.

Contracting agencies may reference Form FHWA-1273 in bid proposal or request for proposal documents, however, the Form FHWA-1273 must be physically incorporated (not referenced) in all contracts, subcontracts and lower-tier subcontracts (excluding purchase orders, rental agreements and other agreements for supplies or services related to a construction contract).

2. Subject to the applicability criteria noted in the following sections, these contract provisions shall apply to all work performed on the contract by the contractor's own organization and with the assistance of workers under the contractor's immediate superintendence and to all work performed on the contract by piecework, station work, or by subcontract.

3. A breach of any of the stipulations contained in these Required Contract Provisions may be sufficient grounds for withholding of progress payments, withholding of final payment, termination of the contract, suspension / debarment or any other action determined to be appropriate by the contracting agency and FHWA.

4. Selection of Labor: During the performance of this contract, the contractor shall not use convict labor for any purpose within the limits of a construction project on a Federal-aid highway unless it is labor performed by convicts who are on parole, supervised release, or probation. The term Federal-aid highway does not include roadways functionally classified as local roads or rural minor collectors.

II. NONDISCRIMINATION

The provisions of this section related to 23 CFR Part 230 are applicable to all Federal-aid construction contracts and to all related construction subcontracts of $10,000 or more. The provisions of 23 CFR Part 230 are not applicable to material supply, engineering, or architectural service contracts.

In addition, the contractor and all subcontractors must comply with the following policies: Executive Order 11246, 41 CFR 60, 29 CFR 1625-1627, Title 23 USC Section 140, the Rehabilitation Act of 1973, as amended (29 USC 794), Title VI of the Civil Rights Act of 1964, as amended, and related regulations including 49 CFR Parts 21, 26 and 27; and 23 CFR Parts 200, 230, and 633.

The contractor and all subcontractors must comply with: the requirements of the Equal Opportunity Clause in 41 CFR 60-1.4(b) and, for all construction contracts exceeding $10,000, the Standard Federal Equal Employment Opportunity Construction Contract Specifications in 41 CFR 60-4.3.

Note: The U.S. Department of Labor has exclusive authority to determine compliance with Executive Order 11246 and the policies of the Secretary of Labor including 41 CFR 60, and 29 CFR 1625-1627. The contracting agency and the FHWA have the authority and the responsibility to ensure compliance with Title 23 USC Section 140, the Rehabilitation Act of 1973, as amended (29 USC 794), and Title VI of the Civil Rights Act of 1964, as amended, and related regulations including 49 CFR Parts 21, 26 and 27; and 23 CFR Parts 200, 230, and 633.

The following provision is adopted from 23 CFR 230, Appendix A, with appropriate revisions to conform to the U.S. Department of Labor (US DOL) and FHWA requirements.

1. Equal Employment Opportunity: Equal employment opportunity (EEO) requirements not to discriminate and to take affirmative action to assure equal opportunity as set forth under laws, executive orders, rules, regulations (28 CFR 35, 29 CFR 1630, 29 CFR 1625-1627, 41 CFR 60 and 49 CFR 27) and orders of the Secretary of Labor as modified by the provisions prescribed herein, and imposed pursuant to 23 U.S.C. 140 shall constitute the EEO and specific affirmative action standards for the contractor's project activities under

this contract. The provisions of the Americans with Disabilities Act of 1990 (42 U.S.C. 12101 et seq.) set forth under 28 CFR 35 and 29 CFR 1630 are incorporated by reference in this contract. In the execution of this contract, the contractor agrees to comply with the following minimum specific requirement activities of EEO:

a. The contractor will work with the contracting agency and the Federal Government to ensure that it has made every good faith effort to provide equal opportunity with respect to all of its terms and conditions of employment and in their review of activities under the contract.

b. The contractor will accept as its operating policy the following statement:

"It is the policy of this Company to assure that applicants are employed, and that employees are treated during employment, without regard to their race, religion, sex, color, national origin, age or disability. Such action shall include: employment, upgrading, demotion, or transfer; recruitment or recruitment advertising; layoff or termination; rates of pay or other forms of compensation; and selection for training, including apprenticeship, pre-apprenticeship, and/or on-the-job training."

2. EEO Officer: The contractor will designate and make known to the contracting officers an EEO Officer who will have the responsibility for and must be capable of effectively administering and promoting an active EEO program and who must be assigned adequate authority and responsibility to do so.

3. Dissemination of Policy: All members of the contractor's staff who are authorized to hire, supervise, promote, and discharge employees, or who recommend such action, or who are substantially involved in such action, will be made fully cognizant of, and will implement, the contractor's EEO policy and contractual responsibilities to provide EEO in each grade and classification of employment. To ensure that the above agreement will be met, the following actions will be taken as a minimum:

a. Periodic meetings of supervisory and personnel office employees will be conducted before the start of work and then not less often than once every six months, at which time the contractor's EEO policy and its implementation will be reviewed and explained. The meetings will be conducted by the EEO Officer.

b. All new supervisory or personnel office employees will be given a thorough indoctrination by the EEO Officer, covering all major aspects of the contractor's EEO obligations within thirty days following their reporting for duty with the contractor.

c. All personnel who are engaged in direct recruitment for the project will be instructed by the EEO Officer in the contractor's procedures for locating and hiring minorities and women.

d. Notices and posters setting forth the contractor's EEO policy will be placed in areas readily accessible to employees, applicants for employment and potential employees.

e. The contractor's EEO policy and the procedures to implement such policy will be brought to the attention of employees by means of meetings, employee handbooks, or other appropriate means.

4. Recruitment: When advertising for employees, the contractor will include in all advertisements for employees the notation: "An Equal Opportunity Employer." All such advertisements will be placed in publications having a large circulation among minorities and women in the area from which the project work force would normally be derived.

a. The contractor will, unless precluded by a valid bargaining agreement, conduct systematic and direct recruitment through public and private employee referral sources likely to yield qualified minorities and women. To meet this requirement, the contractor will identify sources of potential minority group employees, and establish with such identified sources procedures whereby minority and women applicants may be referred to the contractor for employment consideration.

b. In the event the contractor has a valid bargaining agreement providing for exclusive hiring hall referrals, the contractor is expected to observe the provisions of that agreement to the extent that the system meets the contractor's compliance with EEO contract provisions. Where implementation of such an agreement has the effect of discriminating against minorities or women, or obligates the contractor to do the same, such implementation violates Federal nondiscrimination provisions.

c. The contractor will encourage its present employees to refer minorities and women as applicants for employment. Information and procedures with regard to referring such applicants will be discussed with employees.

5. Personnel Actions: Wages, working conditions, and employee benefits shall be established and administered, and personnel actions of every type, including hiring, upgrading, promotion, transfer, demotion, layoff, and termination, shall be taken without regard to race, color, religion, sex, national origin, age or disability. The following procedures shall be followed:

a. The contractor will conduct periodic inspections of project sites to insure that working conditions and employee facilities do not indicate discriminatory treatment of project site personnel.

b. The contractor will periodically evaluate the spread of wages paid within each classification to determine any evidence of discriminatory wage practices.

c. The contractor will periodically review selected personnel actions in depth to determine whether there is evidence of discrimination. Where evidence is found, the contractor will promptly take corrective action. If the review indicates that the discrimination may extend beyond the actions reviewed, such corrective action shall include all affected persons.

d. The contractor will promptly investigate all complaints of alleged discrimination made to the contractor in connection with its obligations under this contract, will attempt to resolve such complaints, and will take appropriate corrective action within a reasonable time. If the investigation indicates that the discrimination may affect persons other than the complainant, such corrective action shall include such other persons. Upon completion of each investigation, the contractor will inform every complainant of all of their avenues of appeal.

6. Training and Promotion:

a. The contractor will assist in locating, qualifying, and increasing the skills of minorities and women who are

applicants for employment or current employees. Such efforts should be aimed at developing full journey level status employees in the type of trade or job classification involved.

b. Consistent with the contractor's work force requirements and as permissible under Federal and State regulations, the contractor shall make full use of training programs, i.e., apprenticeship, and on-the-job training programs for the geographical area of contract performance. In the event a special provision for training is provided under this contract, this subparagraph will be superseded as indicated in the special provision. The contracting agency may reserve training positions for persons who receive welfare assistance in accordance with 23 U.S.C. 140(a).

c. The contractor will advise employees and applicants for employment of available training programs and entrance requirements for each.

d. The contractor will periodically review the training and promotion potential of employees who are minorities and women and will encourage eligible employees to apply for such training and promotion.

7. Unions: If the contractor relies in whole or in part upon unions as a source of employees, the contractor will use good faith efforts to obtain the cooperation of such unions to increase opportunities for minorities and women. Actions by the contractor, either directly or through a contractor's association acting as agent, will include the procedures set forth below:

a. The contractor will use good faith efforts to develop, in cooperation with the unions, joint training programs aimed toward qualifying more minorities and women for membership in the unions and increasing the skills of minorities and women so that they may qualify for higher paying employment.

b. The contractor will use good faith efforts to incorporate an EEO clause into each union agreement to the end that such union will be contractually bound to refer applicants without regard to their race, color, religion, sex, national origin, age or disability.

c. The contractor is to obtain information as to the referral practices and policies of the labor union except that to the extent such information is within the exclusive possession of the labor union and such labor union refuses to furnish such information to the contractor, the contractor shall so certify to the contracting agency and shall set forth what efforts have been made to obtain such information.

d. In the event the union is unable to provide the contractor with a reasonable flow of referrals within the time limit set forth in the collective bargaining agreement, the contractor will, through independent recruitment efforts, fill the employment vacancies without regard to race, color, religion, sex, national origin, age or disability; making full efforts to obtain qualified and/or qualifiable minorities and women. The failure of a union to provide sufficient referrals (even though it is obligated to provide exclusive referrals under the terms of a collective bargaining agreement) does not relieve the contractor from the requirements of this paragraph. In the event the union referral practice prevents the contractor from meeting the obligations pursuant to Executive Order 11246, as amended, and these special provisions, such contractor shall immediately notify the contracting agency.

8. Reasonable Accommodation for Applicants / Employees with Disabilities: The contractor must be familiar with the requirements for and comply with the Americans with Disabilities Act and all rules and regulations established there under. Employers must provide reasonable accommodation in all employment activities unless to do so would cause an undue hardship.

9. Selection of Subcontractors, Procurement of Materials and Leasing of Equipment: The contractor shall not discriminate on the grounds of race, color, religion, sex, national origin, age or disability in the selection and retention of subcontractors, including procurement of materials and leases of equipment. The contractor shall take all necessary and reasonable steps to ensure nondiscrimination in the administration of this contract.

a. The contractor shall notify all potential subcontractors and suppliers and lessors of their EEO obligations under this contract.

b. The contractor will use good faith efforts to ensure subcontractor compliance with their EEO obligations.

10. Assurance Required by 49 CFR 26.13(b):

a. The requirements of 49 CFR Part 26 and the State DOT's U.S. DOT-approved DBE program are incorporated by reference.

b. The contractor or subcontractor shall not discriminate on the basis of race, color, national origin, or sex in the performance of this contract. The contractor shall carry out applicable requirements of 49 CFR Part 26 in the award and administration of DOT-assisted contracts. Failure by the contractor to carry out these requirements is a material breach of this contract, which may result in the termination of this contract or such other remedy as the contracting agency deems appropriate.

11. Records and Reports: The contractor shall keep such records as necessary to document compliance with the EEO requirements. Such records shall be retained for a period of three years following the date of the final payment to the contractor for all contract work and shall be available at reasonable times and places for inspection by authorized representatives of the contracting agency and the FHWA.

a. The records kept by the contractor shall document the following:

(1) The number and work hours of minority and non-minority group members and women employed in each work classification on the project;

(2) The progress and efforts being made in cooperation with unions, when applicable, to increase employment opportunities for minorities and women; and

(3) The progress and efforts being made in locating, hiring, training, qualifying, and upgrading minorities and women;

b. The contractors and subcontractors will submit an annual report to the contracting agency each July for the duration of the project, indicating the number of minority, women, and non-minority group employees currently engaged in each work classification required by the contract work. This information is to be reported on Form FHWA-1391. The staffing data should represent the project work force on board in all or any part of the last payroll period preceding the end of July. If on-the-job training is being required by special provision, the contractor

will be required to collect and report training data. The employment data should reflect the work force on board during all or any part of the last payroll period preceding the end of July.

III. NONSEGREGATED FACILITIES

This provision is applicable to all Federal-aid construction contracts and to all related construction subcontracts of $10,000 or more.

The contractor must ensure that facilities provided for employees are provided in such a manner that segregation on the basis of race, color, religion, sex, or national origin cannot result. The contractor may neither require such segregated use by written or oral policies nor tolerate such use by employee custom. The contractor's obligation extends further to ensure that its employees are not assigned to perform their services at any location, under the contractor's control, where the facilities are segregated. The term "facilities" includes waiting rooms, work areas, restaurants and other eating areas, time clocks, restrooms, washrooms, locker rooms, and other storage or dressing areas, parking lots, drinking fountains, recreation or entertainment areas, transportation, and housing provided for employees. The contractor shall provide separate or single-user restrooms and necessary dressing or sleeping areas to assure privacy between sexes.

IV. DAVIS-BACON AND RELATED ACT PROVISIONS

This section is applicable to all Federal-aid construction projects exceeding $2,000 and to all related subcontracts and lower-tier subcontracts (regardless of subcontract size). The requirements apply to all projects located within the right-of-way of a roadway that is functionally classified as Federal-aid highway. This excludes roadways functionally classified as local roads or rural minor collectors, which are exempt. Contracting agencies may elect to apply these requirements to other projects.

The following provisions are from the U.S. Department of Labor regulations in 29 CFR 5.5 "Contract provisions and related matters" with minor revisions to conform to the FHWA-1273 format and FHWA program requirements.

1. Minimum wages

a. All laborers and mechanics employed or working upon the site of the work, will be paid unconditionally and not less often than once a week, and without subsequent deduction or rebate on any account (except such payroll deductions as are permitted by regulations issued by the Secretary of Labor under the Copeland Act (29 CFR part 3)), the full amount of wages and bona fide fringe benefits (or cash equivalents thereof) due at time of payment computed at rates not less than those contained in the wage determination of the Secretary of Labor which is attached hereto and made a part hereof, regardless of any contractual relationship which may be alleged to exist between the contractor and such laborers and mechanics.

Contributions made or costs reasonably anticipated for bona fide fringe benefits under section 1(b)(2) of the Davis-Bacon Act on behalf of laborers or mechanics are considered wages paid to such laborers or mechanics, subject to the provisions of paragraph 1.d. of this section; also, regular contributions made or costs incurred for more than a weekly period (but not less often than quarterly) under plans, funds, or programs which cover the particular weekly period, are deemed to be constructively made or incurred during such weekly period. Such laborers and mechanics shall be paid the appropriate wage rate and fringe benefits on the wage determination for the classification of work actually performed, without regard to skill, except as provided in 29 CFR 5.5(a)(4). Laborers or mechanics performing work in more than one classification may be compensated at the rate specified for each classification for the time actually worked therein: Provided, That the employer's payroll records accurately set forth the time spent in each classification in which work is performed. The wage determination (including any additional classification and wage rates conformed under paragraph 1.b. of this section) and the Davis-Bacon poster (WH–1321) shall be posted at all times by the contractor and its subcontractors at the site of the work in a prominent and accessible place where it can be easily seen by the workers.

b.(1) The contracting officer shall require that any class of laborers or mechanics, including helpers, which is not listed in the wage determination and which is to be employed under the contract shall be classified in conformance with the wage determination. The contracting officer shall approve an additional classification and wage rate and fringe benefits therefore only when the following criteria have been met:

(i) The work to be performed by the classification requested is not performed by a classification in the wage determination; and

(ii) The classification is utilized in the area by the construction industry; and

(iii) The proposed wage rate, including any bona fide fringe benefits, bears a reasonable relationship to the wage rates contained in the wage determination.

(2) If the contractor and the laborers and mechanics to be employed in the classification (if known), or their representatives, and the contracting officer agree on the classification and wage rate (including the amount designated for fringe benefits where appropriate), a report of the action taken shall be sent by the contracting officer to the Administrator of the Wage and Hour Division, Employment Standards Administration, U.S. Department of Labor, Washington, DC 20210. The Administrator, or an authorized representative, will approve, modify, or disapprove every additional classification action within 30 days of receipt and so advise the contracting officer or will notify the contracting officer within the 30-day period that additional time is necessary.

(3) In the event the contractor, the laborers or mechanics to be employed in the classification or their representatives, and the contracting officer do not agree on the proposed classification and wage rate (including the amount designated for fringe benefits, where appropriate), the contracting officer shall refer the questions, including the views of all interested parties and the recommendation of the contracting officer, to the Wage and Hour Administrator for determination. The Wage and Hour Administrator, or an authorized representative, will issue a determination within 30 days of receipt and so advise the contracting officer or

will notify the contracting officer within the 30-day period that additional time is necessary.

(4) The wage rate (including fringe benefits where appropriate) determined pursuant to paragraphs 1.b.(2) or 1.b.(3) of this section, shall be paid to all workers performing work in the classification under this contract from the first day on which work is performed in the classification.

c. Whenever the minimum wage rate prescribed in the contract for a class of laborers or mechanics includes a fringe benefit which is not expressed as an hourly rate, the contractor shall either pay the benefit as stated in the wage determination or shall pay another bona fide fringe benefit or an hourly cash equivalent thereof.

d. If the contractor does not make payments to a trustee or other third person, the contractor may consider as part of the wages of any laborer or mechanic the amount of any costs reasonably anticipated in providing bona fide fringe benefits under a plan or program, Provided, That the Secretary of Labor has found, upon the written request of the contractor, that the applicable standards of the Davis-Bacon Act have been met. The Secretary of Labor may require the contractor to set aside in a separate account assets for the meeting of obligations under the plan or program.

2. Withholding

The contracting agency shall upon its own action or upon written request of an authorized representative of the Department of Labor, withhold or cause to be withheld from the contractor under this contract, or any other Federal contract with the same prime contractor, or any other federally-assisted contract subject to Davis-Bacon prevailing wage requirements, which is held by the same prime contractor, so much of the accrued payments or advances as may be considered necessary to pay laborers and mechanics, including apprentices, trainees, and helpers, employed by the contractor or any subcontractor the full amount of wages required by the contract. In the event of failure to pay any laborer or mechanic, including any apprentice, trainee, or helper, employed or working on the site of the work, all or part of the wages required by the contract, the contracting agency may, after written notice to the contractor, take such action as may be necessary to cause the suspension of any further payment, advance, or guarantee of funds until such violations have ceased.

3. Payrolls and basic records

a. Payrolls and basic records relating thereto shall be maintained by the contractor during the course of the work and preserved for a period of three years thereafter for all laborers and mechanics working at the site of the work. Such records shall contain the name, address, and social security number of each such worker, his or her correct classification, hourly rates of wages paid (including rates of contributions or costs anticipated for bona fide fringe benefits or cash equivalents thereof of the types described in section 1(b)(2)(B) of the Davis-Bacon Act), daily and weekly number of hours worked, deductions made and actual wages paid. Whenever the Secretary of Labor has found under 29 CFR 5.5(a)(1)(iv) that the wages of any laborer or mechanic include the amount of any costs reasonably anticipated in providing benefits under a plan or program described in section 1(b)(2)(B) of the Davis-Bacon Act, the contractor shall maintain records which show that the commitment to provide such benefits is enforceable, that the plan or program is financially responsible, and that the plan or program has been communicated in writing to the laborers or mechanics affected, and records which show the costs anticipated or the actual cost incurred in providing such benefits. Contractors employing apprentices or trainees under approved programs shall maintain written evidence of the registration of apprenticeship programs and certification of trainee programs, the registration of the apprentices and trainees, and the ratios and wage rates prescribed in the applicable programs.

b.(1) The contractor shall submit weekly for each week in which any contract work is performed a copy of all payrolls to the contracting agency. The payrolls submitted shall set out accurately and completely all of the information required to be maintained under 29 CFR 5.5(a)(3)(i), except that full social security numbers and home addresses shall not be included on weekly transmittals. Instead the payrolls shall only need to include an individually identifying number for each employee (e.g. , the last four digits of the employee's social security number). The required weekly payroll information may be submitted in any form desired. Optional Form WH–347 is available for this purpose from the Wage and Hour Division Web site at http://www.dol.gov/esa/whd/forms/wh347instr.htm or its successor site. The prime contractor is responsible for the submission of copies of payrolls by all subcontractors. Contractors and subcontractors shall maintain the full social security number and current address of each covered worker, and shall provide them upon request to the contracting agency for transmission to the State DOT, the FHWA or the Wage and Hour Division of the Department of Labor for purposes of an investigation or audit of compliance with prevailing wage requirements. It is not a violation of this section for a prime contractor to require a subcontractor to provide addresses and social security numbers to the prime contractor for its own records, without weekly submission to the contracting agency..

(2) Each payroll submitted shall be accompanied by a "Statement of Compliance," signed by the contractor or subcontractor or his or her agent who pays or supervises the payment of the persons employed under the contract and shall certify the following:

(i) That the payroll for the payroll period contains the information required to be provided under §5.5 (a)(3)(ii) of Regulations, 29 CFR part 5, the appropriate information is being maintained under §5.5 (a)(3)(i) of Regulations, 29 CFR part 5, and that such information is correct and complete;

(ii) That each laborer or mechanic (including each helper, apprentice, and trainee) employed on the contract during the payroll period has been paid the full weekly wages earned, without rebate, either directly or indirectly, and that no deductions have been made either directly or indirectly from the full wages earned, other than permissible deductions as set forth in Regulations, 29 CFR part 3;

(iii) That each laborer or mechanic has been paid not less than the applicable wage rates and fringe benefits or cash equivalents for the classification of work performed, as specified in the applicable wage determination incorporated into the contract.

(3) The weekly submission of a properly executed certification set forth on the reverse side of Optional Form WH–347 shall satisfy the requirement for submission of the "Statement of Compliance" required by paragraph 3.b.(2) of this section.

(4) The falsification of any of the above certifications may subject the contractor or subcontractor to civil or criminal prosecution under section 1001 of title 18 and section 231 of title 31 of the United States Code.

c. The contractor or subcontractor shall make the records required under paragraph 3.a. of this section available for inspection, copying, or transcription by authorized representatives of the contracting agency, the State DOT, the FHWA, or the Department of Labor, and shall permit such representatives to interview employees during working hours on the job. If the contractor or subcontractor fails to submit the required records or to make them available, the FHWA may, after written notice to the contractor, the contracting agency or the State DOT, take such action as may be necessary to cause the suspension of any further payment, advance, or guarantee of funds. Furthermore, failure to submit the required records upon request or to make such records available may be grounds for debarment action pursuant to 29 CFR 5.12.

4. Apprentices and trainees

a. Apprentices (programs of the USDOL).

Apprentices will be permitted to work at less than the predetermined rate for the work they performed when they are employed pursuant to and individually registered in a bona fide apprenticeship program registered with the U.S. Department of Labor, Employment and Training Administration, Office of Apprenticeship Training, Employer and Labor Services, or with a State Apprenticeship Agency recognized by the Office, or if a person is employed in his or her first 90 days of probationary employment as an apprentice in such an apprenticeship program, who is not individually registered in the program, but who has been certified by the Office of Apprenticeship Training, Employer and Labor Services or a State Apprenticeship Agency (where appropriate) to be eligible for probationary employment as an apprentice.

The allowable ratio of apprentices to journeymen on the job site in any craft classification shall not be greater than the ratio permitted to the contractor as to the entire work force under the registered program. Any worker listed on a payroll at an apprentice wage rate, who is not registered or otherwise employed as stated above, shall be paid not less than the applicable wage rate on the wage determination for the classification of work actually performed. In addition, any apprentice performing work on the job site in excess of the ratio permitted under the registered program shall be paid not less than the applicable wage rate on the wage determination for the work actually performed. Where a contractor is performing construction on a project in a locality other than that in which its program is registered, the ratios and wage rates (expressed in percentages of the journeyman's hourly rate) specified in the contractor's or subcontractor's registered program shall be observed.

Every apprentice must be paid at not less than the rate specified in the registered program for the apprentice's level of progress, expressed as a percentage of the journeymen hourly rate specified in the applicable wage determination. Apprentices shall be paid fringe benefits in accordance with the provisions of the apprenticeship program. If the apprenticeship program does not specify fringe benefits, apprentices must be paid the full amount of fringe benefits listed on the wage determination for the applicable classification. If the Administrator determines that a different practice prevails for the applicable apprentice classification, fringes shall be paid in accordance with that determination.

In the event the Office of Apprenticeship Training, Employer and Labor Services, or a State Apprenticeship Agency recognized by the Office, withdraws approval of an apprenticeship program, the contractor will no longer be permitted to utilize apprentices at less than the applicable predetermined rate for the work performed until an acceptable program is approved.

b. Trainees (programs of the USDOL).

Except as provided in 29 CFR 5.16, trainees will not be permitted to work at less than the predetermined rate for the work performed unless they are employed pursuant to and individually registered in a program which has received prior approval, evidenced by formal certification by the U.S. Department of Labor, Employment and Training Administration.

The ratio of trainees to journeymen on the job site shall not be greater than permitted under the plan approved by the Employment and Training Administration.

Every trainee must be paid at not less than the rate specified in the approved program for the trainee's level of progress, expressed as a percentage of the journeyman hourly rate specified in the applicable wage determination. Trainees shall be paid fringe benefits in accordance with the provisions of the trainee program. If the trainee program does not mention fringe benefits, trainees shall be paid the full amount of fringe benefits listed on the wage determination unless the Administrator of the Wage and Hour Division determines that there is an apprenticeship program associated with the corresponding journeyman wage rate on the wage determination which provides for less than full fringe benefits for apprentices. Any employee listed on the payroll at a trainee rate who is not registered and participating in a training plan approved by the Employment and Training Administration shall be paid not less than the applicable wage rate on the wage determination for the classification of work actually performed. In addition, any trainee performing work on the job site in excess of the ratio permitted under the registered program shall be paid not less than the applicable wage rate on the wage determination for the work actually performed.

In the event the Employment and Training Administration withdraws approval of a training program, the contractor will no longer be permitted to utilize trainees at less than the applicable predetermined rate for the work performed until an acceptable program is approved.

c. Equal employment opportunity. The utilization of apprentices, trainees and journeymen under this part shall be in conformity with the equal employment opportunity requirements of Executive Order 11246, as amended, and 29 CFR part 30.

d. Apprentices and Trainees (programs of the U.S. DOT).

Apprentices and trainees working under apprenticeship and skill training programs which have been certified by the Secretary of Transportation as promoting EEO in connection with Federal-aid highway construction programs are not subject to the requirements of paragraph 4 of this Section IV. The straight time hourly wage rates for apprentices and trainees under such programs will be established by the particular programs. The ratio of apprentices and trainees to journeymen shall not be greater than permitted by the terms of the particular program.

5. Compliance with Copeland Act requirements. The contractor shall comply with the requirements of 29 CFR part 3, which are incorporated by reference in this contract.

6. Subcontracts. The contractor or subcontractor shall insert Form FHWA-1273 in any subcontracts and also require the subcontractors to include Form FHWA-1273 in any lower tier subcontracts. The prime contractor shall be responsible for the compliance by any subcontractor or lower tier subcontractor with all the contract clauses in 29 CFR 5.5.

7. Contract termination: debarment. A breach of the contract clauses in 29 CFR 5.5 may be grounds for termination of the contract, and for debarment as a contractor and a subcontractor as provided in 29 CFR 5.12.

8. Compliance with Davis-Bacon and Related Act requirements. All rulings and interpretations of the Davis-Bacon and Related Acts contained in 29 CFR parts 1, 3, and 5 are herein incorporated by reference in this contract.

9. Disputes concerning labor standards. Disputes arising out of the labor standards provisions of this contract shall not be subject to the general disputes clause of this contract. Such disputes shall be resolved in accordance with the procedures of the Department of Labor set forth in 29 CFR parts 5, 6, and 7. Disputes within the meaning of this clause include disputes between the contractor (or any of its subcontractors) and the contracting agency, the U.S. Department of Labor, or the employees or their representatives.

10. Certification of eligibility.

a. By entering into this contract, the contractor certifies that neither it (nor he or she) nor any person or firm who has an interest in the contractor's firm is a person or firm ineligible to be awarded Government contracts by virtue of section 3(a) of the Davis-Bacon Act or 29 CFR 5.12(a)(1).

b. No part of this contract shall be subcontracted to any person or firm ineligible for award of a Government contract by virtue of section 3(a) of the Davis-Bacon Act or 29 CFR 5.12(a)(1).

c. The penalty for making false statements is prescribed in the U.S. Criminal Code, 18 U.S.C. 1001.

V. CONTRACT WORK HOURS AND SAFETY STANDARDS ACT

The following clauses apply to any Federal-aid construction contract in an amount in excess of $100,000 and subject to the overtime provisions of the Contract Work Hours and Safety Standards Act. These clauses shall be inserted in addition to the clauses required by 29 CFR 5.5(a) or 29 CFR 4.6. As used in this paragraph, the terms laborers and mechanics include watchmen and guards.

1. Overtime requirements. No contractor or subcontractor contracting for any part of the contract work which may require or involve the employment of laborers or mechanics shall require or permit any such laborer or mechanic in any workweek in which he or she is employed on such work to work in excess of forty hours in such workweek unless such laborer or mechanic receives compensation at a rate not less than one and one-half times the basic rate of pay for all hours worked in excess of forty hours in such workweek.

2. Violation; liability for unpaid wages; liquidated damages. In the event of any violation of the clause set forth in paragraph (1.) of this section, the contractor and any subcontractor responsible therefor shall be liable for the unpaid wages. In addition, such contractor and subcontractor shall be liable to the United States (in the case of work done under contract for the District of Columbia or a territory, to such District or to such territory), for liquidated damages. Such liquidated damages shall be computed with respect to each individual laborer or mechanic, including watchmen and guards, employed in violation of the clause set forth in paragraph (1.) of this section, in the sum of $10 for each calendar day on which such individual was required or permitted to work in excess of the standard workweek of forty hours without payment of the overtime wages required by the clause set forth in paragraph (1.) of this section.

3. Withholding for unpaid wages and liquidated damages. The FHWA or the contacting agency shall upon its own action or upon written request of an authorized representative of the Department of Labor withhold or cause to be withheld, from any moneys payable on account of work performed by the contractor or subcontractor under any such contract or any other Federal contract with the same prime contractor, or any other federally-assisted contract subject to the Contract Work Hours and Safety Standards Act, which is held by the same prime contractor, such sums as may be determined to be necessary to satisfy any liabilities of such contractor or subcontractor for unpaid wages and liquidated damages as provided in the clause set forth in paragraph (2.) of this section.

4. Subcontracts. The contractor or subcontractor shall insert in any subcontracts the clauses set forth in paragraph (1.) through (4.) of this section and also a clause requiring the subcontractors to include these clauses in any lower tier subcontracts. The prime contractor shall be responsible for compliance by any subcontractor or lower tier subcontractor with the clauses set forth in paragraphs (1.) through (4.) of this section.

VI. SUBLETTING OR ASSIGNING THE CONTRACT

This provision is applicable to all Federal-aid construction contracts on the National Highway System.

1. The contractor shall perform with its own organization contract work amounting to not less than 30 percent (or a greater percentage if specified elsewhere in the contract) of the total original contract price, excluding any specialty items designated by the contracting agency. Specialty items may be performed by subcontract and the amount of any such specialty items performed may be deducted from the total original contract price before computing the amount of work required to be performed by the contractor's own organization (23 CFR 635.116).

a. The term "perform work with its own organization" refers to workers employed or leased by the prime contractor, and equipment owned or rented by the prime contractor, with or without operators. Such term does not include employees or equipment of a subcontractor or lower tier subcontractor, agents of the prime contractor, or any other assignees. The term may include payments for the costs of hiring leased employees from an employee leasing firm meeting all relevant Federal and State regulatory requirements. Leased employees may only be included in this term if the prime contractor meets all of the following conditions:

(1) the prime contractor maintains control over the supervision of the day-to-day activities of the leased employees;
(2) the prime contractor remains responsible for the quality of the work of the leased employees;
(3) the prime contractor retains all power to accept or exclude individual employees from work on the project; and
(4) the prime contractor remains ultimately responsible for the payment of predetermined minimum wages, the submission of payrolls, statements of compliance and all other Federal regulatory requirements.

b. "Specialty Items" shall be construed to be limited to work that requires highly specialized knowledge, abilities, or equipment not ordinarily available in the type of contracting organizations qualified and expected to bid or propose on the contract as a whole and in general are to be limited to minor components of the overall contract.

2. The contract amount upon which the requirements set forth in paragraph (1) of Section VI is computed includes the cost of material and manufactured products which are to be purchased or produced by the contractor under the contract provisions.

3. The contractor shall furnish (a) a competent superintendent or supervisor who is employed by the firm, has full authority to direct performance of the work in accordance with the contract requirements, and is in charge of all construction operations (regardless of who performs the work) and (b) such other of its own organizational resources (supervision, management, and engineering services) as the contracting officer determines is necessary to assure the performance of the contract.

4. No portion of the contract shall be sublet, assigned or otherwise disposed of except with the written consent of the contracting officer, or authorized representative, and such consent when given shall not be construed to relieve the contractor of any responsibility for the fulfillment of the contract. Written consent will be given only after the contracting agency has assured that each subcontract is evidenced in writing and that it contains all pertinent provisions and requirements of the prime contract.

5. The 30% self-performance requirement of paragraph (1) is not applicable to design-build contracts; however, contracting agencies may establish their own self-performance requirements.

VII. SAFETY: ACCIDENT PREVENTION

This provision is applicable to all Federal-aid construction contracts and to all related subcontracts.

1. In the performance of this contract the contractor shall comply with all applicable Federal, State, and local laws governing safety, health, and sanitation (23 CFR 635). The contractor shall provide all safeguards, safety devices and protective equipment and take any other needed actions as it determines, or as the contracting officer may determine, to be reasonably necessary to protect the life and health of employees on the job and the safety of the public and to protect property in connection with the performance of the work covered by the contract.

2. It is a condition of this contract, and shall be made a condition of each subcontract, which the contractor enters into pursuant to this contract, that the contractor and any subcontractor shall not permit any employee, in performance of the contract, to work in surroundings or under conditions which are unsanitary, hazardous or dangerous to his/her health or safety, as determined under construction safety and health standards (29 CFR 1926) promulgated by the Secretary of Labor, in accordance with Section 107 of the Contract Work Hours and Safety Standards Act (40 U.S.C. 3704).

3. Pursuant to 29 CFR 1926.3, it is a condition of this contract that the Secretary of Labor or authorized representative thereof, shall have right of entry to any site of contract performance to inspect or investigate the matter of compliance with the construction safety and health standards and to carry out the duties of the Secretary under Section 107 of the Contract Work Hours and Safety Standards Act (40 U.S.C.3704).

VIII. FALSE STATEMENTS CONCERNING HIGHWAY PROJECTS

This provision is applicable to all Federal-aid construction contracts and to all related subcontracts.

In order to assure high quality and durable construction in conformity with approved plans and specifications and a high degree of reliability on statements and representations made by engineers, contractors, suppliers, and workers on Federal-aid highway projects, it is essential that all persons concerned with the project perform their functions as carefully, thoroughly, and honestly as possible. Willful falsification, distortion, or misrepresentation with respect to any facts related to the project is a violation of Federal law. To prevent any misunderstanding regarding the seriousness of these and similar acts, Form FHWA-1022 shall be posted on each Federal-aid highway project (23 CFR 635) in one or more places where it is readily available to all persons concerned with the project:

18 U.S.C. 1020 reads as follows:

"Whoever, being an officer, agent, or employee of the United States, or of any State or Territory, or whoever, whether a person, association, firm, or corporation, knowingly makes any false statement, false representation, or false report as to the character, quality, quantity, or cost of the material used or to be used, or the quantity or quality of the work performed or to be performed, or the cost thereof in connection with the submission of plans, maps, specifications, contracts, or costs of construction on any highway or related project submitted for approval to the Secretary of Transportation; or

Whoever knowingly makes any false statement, false representation, false report or false claim with respect to the character, quality, quantity, or cost of any work performed or to be performed, or materials furnished or to be furnished, in connection with the construction of any highway or related project approved by the Secretary of Transportation; or

Whoever knowingly makes any false statement or false representation as to material fact in any statement, certificate, or report submitted pursuant to provisions of the Federal-aid Roads Act approved July 1, 1916, (39 Stat. 355), as amended and supplemented;

Shall be fined under this title or imprisoned not more than 5 years or both."

IX. IMPLEMENTATION OF CLEAN AIR ACT AND FEDERAL WATER POLLUTION CONTROL ACT

This provision is applicable to all Federal-aid construction contracts and to all related subcontracts.

By submission of this bid/proposal or the execution of this contract, or subcontract, as appropriate, the bidder, proposer, Federal-aid construction contractor, or subcontractor, as appropriate, will be deemed to have stipulated as follows:

1. That any person who is or will be utilized in the performance of this contract is not prohibited from receiving an award due to a violation of Section 508 of the Clean Water Act or Section 306 of the Clean Air Act.
2. That the contractor agrees to include or cause to be included the requirements of paragraph (1) of this Section X in every subcontract, and further agrees to take such action as the contracting agency may direct as a means of enforcing such requirements.

X. CERTIFICATION REGARDING DEBARMENT, SUSPENSION, INELIGIBILITY AND VOLUNTARY EXCLUSION

This provision is applicable to all Federal-aid construction contracts, design-build contracts, subcontracts, lower-tier subcontracts, purchase orders, lease agreements, consultant contracts or any other covered transaction requiring FHWA approval or that is estimated to cost $25,000 or more – as defined in 2 CFR Parts 180 and 1200.

1. Instructions for Certification – First Tier Participants:

a. By signing and submitting this proposal, the prospective first tier participant is providing the certification set out below.

b. The inability of a person to provide the certification set out below will not necessarily result in denial of participation in this covered transaction. The prospective first tier participant shall submit an explanation of why it cannot provide the certification set out below. The certification or explanation will be considered in connection with the department or agency's determination whether to enter into this transaction. However, failure of the prospective first tier participant to furnish a certification or an explanation shall disqualify such a person from participation in this transaction.

c. The certification in this clause is a material representation of fact upon which reliance was placed when the contracting agency determined to enter into this transaction. If it is later determined that the prospective participant knowingly rendered an erroneous certification, in addition to other remedies available to the Federal Government, the contracting agency may terminate this transaction for cause of default.

d. The prospective first tier participant shall provide immediate written notice to the contracting agency to whom this proposal is submitted if any time the prospective first tier participant learns that its certification was erroneous when submitted or has become erroneous by reason of changed circumstances.

e. The terms "covered transaction," "debarred," "suspended," "ineligible," "participant," "person," "principal," and "voluntarily excluded," as used in this clause, are defined in 2 CFR Parts 180 and 1200. "First Tier Covered Transactions" refers to any covered transaction between a grantee or subgrantee of Federal funds and a participant (such as the prime or general contract). "Lower Tier Covered Transactions" refers to any covered transaction under a First Tier Covered Transaction (such as subcontracts). "First Tier Participant" refers to the participant who has entered into a covered transaction with a grantee or subgrantee of Federal funds (such as the prime or general contractor). "Lower Tier Participant" refers any participant who has entered into a covered transaction with a First Tier Participant or other Lower Tier Participants (such as subcontractors and suppliers).

f. The prospective first tier participant agrees by submitting this proposal that, should the proposed covered transaction be entered into, it shall not knowingly enter into any lower tier covered transaction with a person who is debarred, suspended, declared ineligible, or voluntarily excluded from participation in this covered transaction, unless authorized by the department or agency entering into this transaction.

g. The prospective first tier participant further agrees by submitting this proposal that it will include the clause titled "Certification Regarding Debarment, Suspension, Ineligibility and Voluntary Exclusion-Lower Tier Covered Transactions," provided by the department or contracting agency, entering into this covered transaction, without modification, in all lower tier covered transactions and in all solicitations for lower tier covered transactions exceeding the $25,000 threshold.

h. A participant in a covered transaction may rely upon a certification of a prospective participant in a lower tier covered transaction that is not debarred, suspended, ineligible, or voluntarily excluded from the covered transaction, unless it knows that the certification is erroneous. A participant is responsible for ensuring that its principals are not suspended, debarred, or otherwise ineligible to participate in covered transactions. To verify the eligibility of its principals, as well as the eligibility of any lower tier prospective participants, each participant may, but is not required to, check the Excluded Parties List System website (https://www.epls.gov/), which is compiled by the General Services Administration.

i. Nothing contained in the foregoing shall be construed to require the establishment of a system of records in order to render in good faith the certification required by this clause. The knowledge and information of the prospective participant is not required to exceed that which is normally possessed by a prudent person in the ordinary course of business dealings.

j. Except for transactions authorized under paragraph (f) of these instructions, if a participant in a covered transaction knowingly enters into a lower tier covered transaction with a person who is suspended, debarred, ineligible, or voluntarily excluded from participation in this transaction, in addition to other remedies available to the Federal Government, the department or agency may terminate this transaction for cause or default.

* * * * *

2. Certification Regarding Debarment, Suspension, Ineligibility and Voluntary Exclusion – First Tier Participants:

a. The prospective first tier participant certifies to the best of its knowledge and belief, that it and its principals:

(1) Are not presently debarred, suspended, proposed for debarment, declared ineligible, or voluntarily excluded from participating in covered transactions by any Federal department or agency;

(2) Have not within a three-year period preceding this proposal been convicted of or had a civil judgment rendered against them for commission of fraud or a criminal offense in connection with obtaining, attempting to obtain, or performing a public (Federal, State or local) transaction or contract under a public transaction; violation of Federal or State antitrust statutes or commission of embezzlement, theft, forgery, bribery, falsification or destruction of records, making false statements, or receiving stolen property;

(3) Are not presently indicted for or otherwise criminally or civilly charged by a governmental entity (Federal, State or local) with commission of any of the offenses enumerated in paragraph (a)(2) of this certification; and

(4) Have not within a three-year period preceding this application/proposal had one or more public transactions (Federal, State or local) terminated for cause or default.

b. Where the prospective participant is unable to certify to any of the statements in this certification, such prospective participant shall attach an explanation to this proposal.

2. **Instructions for Certification - Lower Tier Participants:**

(Applicable to all subcontracts, purchase orders and other lower tier transactions requiring prior FHWA approval or estimated to cost $25,000 or more - 2 CFR Parts 180 and 1200)

a. By signing and submitting this proposal, the prospective lower tier is providing the certification set out below.

b. The certification in this clause is a material representation of fact upon which reliance was placed when this transaction was entered into. If it is later determined that the prospective lower tier participant knowingly rendered an erroneous certification, in addition to other remedies available to the Federal Government, the department, or agency with which this transaction originated may pursue available remedies, including suspension and/or debarment.

c. The prospective lower tier participant shall provide immediate written notice to the person to which this proposal is submitted if at any time the prospective lower tier participant learns that its certification was erroneous by reason of changed circumstances.

d. The terms "covered transaction," "debarred," "suspended," "ineligible," "participant," "person," "principal," and "voluntarily excluded," as used in this clause, are defined in 2 CFR Parts 180 and 1200. You may contact the person to which this proposal is submitted for assistance in obtaining a copy of those regulations. "First Tier Covered Transactions" refers to any covered transaction between a grantee or subgrantee of Federal funds and a participant (such as the prime or general contract). "Lower Tier Covered Transactions" refers to any covered transaction under a First Tier Covered Transaction (such as subcontracts). "First Tier Participant" refers to the participant who has entered into a covered transaction with a grantee or subgrantee of Federal funds (such as the prime or general contractor). "Lower Tier Participant" refers any participant who has entered into a covered transaction with a First Tier Participant or other Lower Tier Participants (such as subcontractors and suppliers).

e. The prospective lower tier participant agrees by submitting this proposal that, should the proposed covered transaction be entered into, it shall not knowingly enter into any lower tier covered transaction with a person who is debarred, suspended, declared ineligible, or voluntarily excluded from participation in this covered transaction, unless authorized by the department or agency with which this transaction originated.

f. The prospective lower tier participant further agrees by submitting this proposal that it will include this clause titled "Certification Regarding Debarment, Suspension, Ineligibility and Voluntary Exclusion-Lower Tier Covered Transaction," without modification, in all lower tier covered transactions and in all solicitations for lower tier covered transactions exceeding the $25,000 threshold.

g. A participant in a covered transaction may rely upon a certification of a prospective participant in a lower tier covered transaction that is not debarred, suspended, ineligible, or voluntarily excluded from the covered transaction, unless it knows that the certification is erroneous. A participant is responsible for ensuring that its principals are not suspended, debarred, or otherwise ineligible to participate in covered transactions. To verify the eligibility of its principals, as well as the eligibility of any lower tier prospective participants, each participant may, but is not required to, check the Excluded Parties List System website (https://www.epls.gov/), which is compiled by the General Services Administration.

h. Nothing contained in the foregoing shall be construed to require establishment of a system of records in order to render in good faith the certification required by this clause. The knowledge and information of participant is not required to exceed that which is normally possessed by a prudent person in the ordinary course of business dealings.

i. Except for transactions authorized under paragraph e of these instructions, if a participant in a covered transaction knowingly enters into a lower tier covered transaction with a person who is suspended, debarred, ineligible, or voluntarily excluded from participation in this transaction, in addition to other remedies available to the Federal Government, the

department or agency with which this transaction originated may pursue available remedies, including suspension and/or debarment.

* * * * *

Certification Regarding Debarment, Suspension, Ineligibility and Voluntary Exclusion--Lower Tier Participants:

1. The prospective lower tier participant certifies, by submission of this proposal, that neither it nor its principals is presently debarred, suspended, proposed for debarment, declared ineligible, or voluntarily excluded from participating in covered transactions by any Federal department or agency.

2. Where the prospective lower tier participant is unable to certify to any of the statements in this certification, such prospective participant shall attach an explanation to this proposal.

* * * * *

XI. CERTIFICATION REGARDING USE OF CONTRACT FUNDS FOR LOBBYING

This provision is applicable to all Federal-aid construction contracts and to all related subcontracts which exceed $100,000 (49 CFR 20).

1. The prospective participant certifies, by signing and submitting this bid or proposal, to the best of his or her knowledge and belief, that:

a. No Federal appropriated funds have been paid or will be paid, by or on behalf of the undersigned, to any person for influencing or attempting to influence an officer or employee of any Federal agency, a Member of Congress, an officer or employee of Congress, or an employee of a Member of Congress in connection with the awarding of any Federal contract, the making of any Federal grant, the making of any Federal loan, the entering into of any cooperative agreement, and the extension, continuation, renewal, amendment, or modification of any Federal contract, grant, loan, or cooperative agreement.

b. If any funds other than Federal appropriated funds have been paid or will be paid to any person for influencing or attempting to influence an officer or employee of any Federal agency, a Member of Congress, an officer or employee of Congress, or an employee of a Member of Congress in connection with this Federal contract, grant, loan, or cooperative agreement, the undersigned shall complete and submit Standard Form-LLL, "Disclosure Form to Report Lobbying," in accordance with its instructions.

2. This certification is a material representation of fact upon which reliance was placed when this transaction was made or entered into. Submission of this certification is a prerequisite for making or entering into this transaction imposed by 31 U.S.C. 1352. Any person who fails to file the required certification shall be subject to a civil penalty of not less than $10,000 and not more than $100,000 for each such failure.

3. The prospective participant also agrees by submitting its bid or proposal that the participant shall require that the language of this certification be included in all lower tier subcontracts, which exceed $100,000 and that all such recipients shall certify and disclose accordingly.

ATTACHMENT A - EMPLOYMENT AND MATERIALS PREFERENCE FOR APPALACHIAN DEVELOPMENT HIGHWAY SYSTEM OR APPALACHIAN LOCAL ACCESS ROAD CONTRACTS

This provision is applicable to all Federal-aid projects funded under the Appalachian Regional Development Act of 1965.

1. During the performance of this contract, the contractor undertaking to do work which is, or reasonably may be, done as on-site work, shall give preference to qualified persons who regularly reside in the labor area as designated by the DOL wherein the contract work is situated, or the subregion, or the Appalachian counties of the State wherein the contract work is situated, except:

a. To the extent that qualified persons regularly residing in the area are not available.

b. For the reasonable needs of the contractor to employ supervisory or specially experienced personnel necessary to assure an efficient execution of the contract work.

c. For the obligation of the contractor to offer employment to present or former employees as the result of a lawful collective bargaining contract, provided that the number of nonresident persons employed under this subparagraph (1c) shall not exceed 20 percent of the total number of employees employed by the contractor on the contract work, except as provided in subparagraph (4) below.

2. The contractor shall place a job order with the State Employment Service indicating (a) the classifications of the laborers, mechanics and other employees required to perform the contract work, (b) the number of employees required in each classification, (c) the date on which the participant estimates such employees will be required, and (d) any other pertinent information required by the State Employment Service to complete the job order form. The job order may be placed with the State Employment Service in writing or by telephone. If during the course of the contract work, the information submitted by the contractor in the original job order is substantially modified, the participant shall promptly notify the State Employment Service.

3. The contractor shall give full consideration to all qualified job applicants referred to him by the State Employment Service. The contractor is not required to grant employment to any job applicants who, in his opinion, are not qualified to perform the classification of work required.

4. If, within one week following the placing of a job order by the contractor with the State Employment Service, the State Employment Service is unable to refer any qualified job applicants to the contractor, or less than the number requested, the State Employment Service will forward a certificate to the contractor indicating the unavailability of applicants. Such certificate shall be made a part of the contractor's permanent project records. Upon receipt of this certificate, the contractor may employ persons who do not normally reside in the labor area to fill positions covered by the certificate, notwithstanding the provisions of subparagraph (1c) above.

5. The provisions of 23 CFR 633.207(e) allow the contracting agency to provide a contractual preference for the use of mineral resource materials native to the Appalachian region.

6. The contractor shall include the provisions of Sections 1 through 4 of this Attachment A in every subcontract for work which is, or reasonably may be, done as on-site work.

EFFECTIVE FEBRUARY 15, 2016

The Cargo Preference Act (CPA) establishes certain requirements for the use of privately owned United States-flag commercial vessels in transporting equipment, materials, and commodities by ocean vessel. Contractors are required to comply with the CPA requirements and 46 CFR 381 and are required to insert the substance of these provisions into any subcontracts issued pursuant to this contract.

Cargo Preference Act Requirements

All Federal-aid projects shall comply with 46 CFR 381.7 (a)–(b) as follows:

(a) *Agreement Clauses.* Use of United States-flag vessels:

(1) Pursuant to Pub. L. 664 (43 U.S.C. 1241(b)) at least 50 percent of any equipment, materials or commodities procured, contracted for or otherwise obtained with funds granted, guaranteed, loaned, or advanced by the U.S. Government under this agreement, and which may be transported by ocean vessel, shall be transported on privately owned United States-flag commercial vessels, if available.

(2) Within 20 days following the date of loading for shipments originating within the United States or within 30 working days following the date of loading for shipments originating outside the United States, a legible copy of a rated, 'on-board' commercial ocean bill-of-lading in English for each shipment of cargo described in paragraph (a)(1) of this section shall be furnished to both the Contracting Officer (through the prime contractor in the case of subcontractor bills-of-lading) and to the Division of National Cargo, Office of Market Development, Maritime Administration, Washington, DC 20590.

(b) *Contractor and Subcontractor Clauses.* Use of United States-flag vessels: The contractor agrees—

(1) To utilize privately owned United States-flag commercial vessels to ship at least 50 percent of the Gross tonnage (computed separately for dry bulk carriers, dry cargo liners, and tankers) involved, whenever shipping any equipment, material, or commodities pursuant to this contract, to the extent such vessels are available at fair and reasonable rates for United States-flag commercial vessels.

(2) To furnish within 20 days following the date of loading for shipments originating within the United States or within 30 working days following the date of loading for shipments originating outside the United States, a legible copy of a rated, 'on-board' commercial ocean bill-of-lading in English for each shipment of cargo described in paragraph (b) (1) of this section to both the Contracting Officer (through the prime contractor in the case of subcontractor bills-of-lading) and to the Division of National Cargo, Office of Market Development, Maritime Administration, Washington, DC 20590.

(3) To insert the substance of the provisions of this clause in all subcontracts issued pursuant to this contract.

The CPA requirements would be appropriate for oceanic shipments of materials or equipment that is intended for use on a specific Federal-aid project, such as a precast concrete structural members, fabricated structural steel, tunnel boring machines, or large-capacity cranes.

The CPA requirements are not applicable for goods or materials that come into inventories independent of an FHWA funded-contract. For example, the requirements would not apply to shipments of Portland cement, asphalt cement, or aggregates, as industry suppliers and contractors use these materials to replenish existing inventories. In general, most of the materials used for highway construction originate from existing inventories and are not acquired solely for a specific Federal-aid project.

A test for whether CPA requirements apply or do not apply to shipped goods or materials would be if the goods or materials are what one would consider to be common inventory supplies for highway construction contractor, then CPA would **not apply**. If the materials or goods are considered to be supplies one would consider to be not common supplies of a highway construction contractor then CPA would **apply**.

SPECIAL PROVISION

Required Contract Provisions
Federal-Aid Construction Contracts

1. *Subsection I.4 Selection of Labor; Delete the last sentence in the paragraph.*

2. *Subsections IV Davis Bacon and Related Act Provisions; Delete the first paragraph in its entirety and substitute the following:*

   "This section is applicable to all Federal-aid construction projects exceeding $2,000 and to all related subcontracts. The requirements apply to all projects located within the right-of-way of a roadway."

12-15-2008

EXHIBIT "D"

NOTICE TO CONTRACTORS
COMPLIANCE WITH TITLE VI OF THE CIVIL RIGHTS ACT OF 1964
FOR
FEDERAL-AID CONTRACTS

During the performance of this Contract, the Contractor, for itself, its assignees and successors in interest (hereinafter referred to as the "Contractor"), agrees as follows:

1. Compliance with Regulations: The Contractor will comply with the Regulations of the Department of Transportation relative to nondiscrimination in Federally-assisted programs of the Department of Transportation (Title 49, Code of Federal Regulations, Part 21, hereinafter referred to as the "Regulations"), which are herein incorporated by reference and made a part of the Contract.

2. Nondiscrimination: The Contractor, with regard to the work performed by it afterward and prior to completion of the contract work, will not discriminate on the ground of race, color, national origin, disability, sex, or age in the selection and retention of subcontracts including procurements of materials and leases of equipment. This will be done in accordance with Title VI of the Civil Rights Act of 1964 and other Non-Discrimination Authorities i.e., Section 504 of the 1973 Rehabilitation Act, the 1973 Federal-Aid Highway Act, the 1975 Age Discrimination Act, and the Americans with Disabilities Act of 1990. The Contractor will not participate either directly or indirectly in the discrimination prohibited by Section 21.5 of the Regulations, including employment practices when contract covers a program set forth in Appendix B of the Regulations. In addition, the Contractor will not participate either directly or indirectly in discrimination prohibited by 23 CFR 710.405 (b).

3. Solicitations for subcontracts, including procurements of materials and equipment: In all solicitations, either by competitive bidding or negotiation made by the Contractor for work to be performed under a subcontract, including procurements of materials or equipment, each potential subcontractor or supplier shall be notified by the Contractor of the Contractor's obligations under this Contract and the Regulations relative to nondiscrimination on the ground of race, color, national origin, disability, sex or age.

4. Information and Reports: The Contractor will provide all information and reports required by the Regulations, or orders and instructions issued pursuant thereto, and will permit access to its books, records, accounts, other sources of information, and its facilities as may be determined by the Department of Transportation or the Federal Highway Administration to be pertinent to ascertain compliance with such Regulations, orders and instructions. Where any information required of a Contractor is in the exclusive possession of another who fails or refuses to furnish this information, the Contractor shall so certify to the Department of Transportation, or the Federal Highway Administration as appropriate, and shall set forth what efforts it has made to obtain the information.

5. Sanctions for Noncompliance: In the event of the Contractor's noncompliance with the nondiscrimination provisions of this Contract, the Department of Transportation shall impose such Contract sanctions as it or the Federal Highway Administration may determine to be appropriate, including, but not limited to:

(a) withholding of payments to the Contractors under the Contract until the Contractor complies, and/or

(b) Cancellation, termination or suspension of the Contract, in whole or in part.

6. Incorporation of Provisions: The Contractor will include the provisions of paragraph (1) through (6) in every subcontract, including procurements of materials and leases of equipment, unless exempt by the Regulations, orders or instruction issued pursuant thereto. The Contractor will take such action with respect to any subcontract or procurement as the Department of Transportation or the Federal Highway Administration may direct as a means of enforcing such provisions including sanctions for noncompliance. Provided, however, that in the event a Contractor becomes involved in, or is threatened with, litigation with a subcontractor or supplier as result of such direction, the Contractor may request the State to enter into such litigation to protect the interests of the State, and, in addition, the Contractor may request the United States to enter into such litigation to protect the interest of the United States.

DEPARTMENT OF TRANSPORTATION
STATE OF GEORGIA

U.S. Department of Labor General Decision Number: GA170233 01/06/2017 GA233

Superseded General Decision Number: GA20160233

State: Georgia

Construction Type: Highway

County: Bibb County in Georgia.

HIGHWAY CONSTRUCTION PROJECTS

Note: Under Executive Order (EO) 13658, an hourly minimum wage of $10.20 for calendar year 2017 applies to all contracts subject to the Davis-Bacon Act for which the contract is awarded (and any solicitation was issued) on or after January 1, 2015. If this contract is covered by the EO, the contractor must pay all workers in any classification listed on this wage determination at least $10.20 per hour (or the applicable wage rate listed on this wage determination, if it is higher) for all hours spent performing on the contract in calendar year 2017. The EO minimum wage rate will be adjusted annually. Additional information on contractor requirements and worker protections under the EO is available at www.dol.gov/whd/govcontracts.

Modification Number	Publication Date
0	01/06/2017

SUGA2014-055 10/03/2016

	Rates	Fringes
CARPENTER, Excludes Form Work	$ 14.25	0.00
CEMENT MASON/CONCRETE FINISHER	$ 16.55	0.00
FORM WORKER	$ 13.97	0.00
HIGHWAY/PARKING LOT STRIPING: Operator (Striping Machine)	$ 15.93	0.00
IRONWORKER, REINFORCING	$ 17.17	0.00
IRONWORKER, STRUCTURAL	$ 15.14	0.00
LABORER: Grade Checker	$ 11.45	0.00
LABORER: Mason Tender - Cement/Concrete	$ 11.58	0.00

LABORER: Pipelayer	$ 13.75	0.00
LABORER: Asphalt (Includes Distributor, Raker, Screed, Shoveler, and Spreader)	$ 11.00	0.00
LABORER: Common or General, Includes Erosion Control	$ 10.49	0.00
OPERATOR: Backhoe/Excavator/Trackhoe	$ 17.73	0.00
OPERATOR: Bobcat/Skid Steer/Skid Loader	$ 12.22	0.00
OPERATOR: Broom/Sweeper	$ 11.58	0.00
OPERATOR: Bulldozer	$ 15.28	0.00
OPERATOR: Compactor	$ 12.60	2.17
OPERATOR: Concrete Saw	$ 18.47	0.00
OPERATOR: Crane	$ 20.26	0.00
OPERATOR: Distributor	$ 15.01	0.00
OPERATOR: Grader/Blade	$ 18.30	0.00
OPERATOR: Hydroseeder	$ 11.68	0.00
OPERATOR: Loader	$ 14.12	1.62
OPERATOR: Mechanic	$ 18.21	0.00
OPERATOR: Milling Machine	$ 15.16	2.52
OPERATOR: Paver (Asphalt, Aggregate, and Concrete)	$ 14.14	0.00
OPERATOR: Piledriver	$ 16.70	0.00
OPERATOR: Roller	$ 13.06	0.00
OPERATOR: Scraper	$ 12.64	0.00
OPERATOR: Screed	$ 13.38	0.00
PAINTER: Spray	$ 23.30	0.00

TRAFFIC CONTROL: Flagger.....$ 12.13 0.00

TRAFFIC CONTROL:
Laborer-Cones/
Barricades/Barrels -
Setter/Mover/Sweeper.....$ 11.94 0.00

TRUCK DRIVER: Dump Truck.....$ 13.60 0.00

TRUCK DRIVER: Flatbed Truck.....$ 14.96 1.19

TRUCK DRIVER: Hydroseeder
Truck.....$ 14.92 0.00

TRUCK DRIVER: Lowboy Truck.....$ 16.79 0.00

TRUCK DRIVER: Off the Road
Truck.....$ 12.38 0.00

TRUCK DRIVER: Water Truck.....$ 12.82 1.61

TRUCK DRIVER: Semi/Trailer
Truck.....$ 16.13 0.00

WELDERS - Receive rate prescribed for craft performing operation to which welding is incidental.

==========

Note: Executive Order (EO) 13706, Establishing Paid Sick Leave for Federal Contractors applies to all contracts subject to the Davis-Bacon Act for which the contract is awarded (and any solicitation was issued) on or after January 1, 2017. If this contract is covered by the EO, the contractor must provide employees with 1 hour of paid sick leave for every 30 hours they work, up to 56 hours of paid sick leave each year. Employees must be permitted to use paid sick leave for their own illness, injury or other health-related needs, including preventive care; to assist a family member (or person who is like family to the employee) who is ill, injured, or has other health-related needs, including preventive care; or for reasons resulting from, or to assist a family member (or person who is like family to the employee) who is a victim of, domestic violence, sexual assault, or stalking. Additional information on contractor requirements and worker protections under the EO is available at www.dol.gov/whd/govcontracts.

Unlisted classifications needed for work not included within the scope of the classifications listed may be added after award only as provided in the labor standards contract clauses

(29CFR 5.5 (a) (1) (ii)).

The body of each wage determination lists the classification and wage rates that have been found to be prevailing for the cited type(s) of construction in the area covered by the wage determination. The classifications are listed in alphabetical order of "identifiers" that indicate whether the particular rate is a union rate (current union negotiated rate for local), a survey rate (weighted average rate) or a union average rate (weighted union average rate).

Union Rate Identifiers

A four letter classification abbreviation identifier enclosed in dotted lines beginning with characters other than "SU" or "UAVG" denotes that the union classification and rate were prevailing for that classification in the survey. Example: PLUM0198-005 07/01/2014. PLUM is an abbreviation identifier of the union which prevailed in the survey for this classification, which in this example would be Plumbers. 0198 indicates the local union number or district council number where applicable, i.e., Plumbers Local 0198. The next number, 005 in the example, is an internal number used in processing the wage determination. 07/01/2014 is the effective date of the most current negotiated rate, which in this example is July 1, 2014.

Union prevailing wage rates are updated to reflect all rate changes in the collective bargaining agreement (CBA) governing this classification and rate.

Survey Rate Identifiers

Classifications listed under the "SU" identifier indicate that no one rate prevailed for this classification in the survey and the published rate is derived by computing a weighted average rate based on all the rates reported in the survey for that classification. As this weighted average rate includes all rates reported in the survey, it may include both union and non-union rates. Example: SULA2012-007 5/13/2014. SU indicates the rates are survey rates based on a weighted average calculation of rates and are not majority rates. LA indicates the State of Louisiana. 2012 is the year of survey on which these classifications and rates are based. The next number, 007 in the example, is an internal number used in producing the wage determination. 5/13/2014 indicates the survey completion date for the classifications and rates under that identifier.

Survey wage rates are not updated and remain in effect until a new survey is conducted.

Union Average Rate Identifiers

Classification(s) listed under the UAVG identifier indicate that no single majority rate prevailed for those classifications; however, 100% of the data reported for the classifications was union data. EXAMPLE: UAVG-OH-0010 08/29/2014. UAVG indicates that the rate is a weighted union average rate. OH indicates the state. The next number, 0010 in the example, is an internal number used in producing the wage determination. 08/29/2014 indicates the survey completion date for the classifications and rates under that identifier.

A UAVG rate will be updated once a year, usually in January of each year, to reflect a weighted average of the current negotiated/CBA rate of the union locals from which the rate is based.

WAGE DETERMINATION APPEALS PROCESS

1.) Has there been an initial decision in the matter? This can be:

* an existing published wage determination
* a survey underlying a wage determination
* a Wage and Hour Division letter setting forth a position on a wage determination matter
* a conformance (additional classification and rate) ruling

On survey related matters, initial contact, including requests for summaries of surveys, should be with the Wage and Hour Regional Office for the area in which the survey was conducted because those Regional Offices have responsibility for the Davis-Bacon survey program. If the response from this initial contact is not satisfactory, then the process described in 2.) and 3.) should be followed.

With regard to any other matter not yet ripe for the formal process described here, initial contact should be with the Branch of Construction Wage Determinations. Write to:

Branch of Construction Wage Determinations
Wage and Hour Division
U.S. Department of Labor

200 Constitution Avenue, N.W.
Washington, DC 20210

2.) If the answer to the question in 1.) is yes, then an interested party (those affected by the action) can request review and reconsideration from the Wage and Hour Administrator (See 29 CFR Part 1.8 and 29 CFR Part 7). Write to:

Wage and Hour Administrator
U.S. Department of Labor
200 Constitution Avenue, N.W.
Washington, DC 20210

The request should be accompanied by a full statement of the interested party's position and by any information (wage payment data, project description, area practice material, etc.) that the requestor considers relevant to the issue.

3.) If the decision of the Administrator is not favorable, an interested party may appeal directly to the Administrative Review Board (formerly the Wage Appeals Board). Write to:

Administrative Review Board
U.S. Department of Labor
200 Constitution Avenue, N.W.
Washington, DC 20210

4.) All decisions by the Administrative Review Board are final.

==========

END OF GENERAL DECISION

STANDARD FEDERAL EQUAL EMPLOYMENT OPPORTUNITY CONSTRUCTION CONTRACT SPECIFICATIONS (EXECUTIVE ORDER 11246) (43 FR 14895)

1. As used in these specifications:
    a. "Covered area" means the geographical area described in the solicitation from which this contract resulted;
    b. "Director" means Director, Office of Federal Contract Compliance Programs, United States Department of Labor, or any person to whom the Director delegated authority;
    c. "Employer Identification Number" means the Federal Social Security number used on the Employer's Quarterly Federal Tax Return, U.S. Treasury Department Form 941.
    d. "Minority" includes:
        (i) Black (all persons having origins in any of the Black African racial groups not of Hispanic origin);
        (ii) Hispanic (all persons of Mexican, Puerto Rican, Cuban, Central or South American or other Spanish Culture or origin, regardless of race);
        (iii) Asian and Pacific Islander (all persons having origins in any of the original peoples of the Far East, Southeast Asia, the Indian Subcontinent, or the Pacific Islands); and
        (iv) American Indian or Alaskan Native (all persons having origins in any of the original peoples of North America and maintaining identifiable tribal affiliations through membership and participation or community identification).

2. Whenever the Contractor, or any Subcontractor at any tier, subcontracts a portion of the work involving any construction trade, it shall physically include in each subcontract in excess of $10,000 the provisions of these specifications and the Notice which contains the applicable goals for minority and female participation and which is set forth in the solicitations from which this contract resulted.

3. If the Contractor is participating (pursuant to 41 CFR 60-4.5) in a Hometown Plan approved by the U.S. Department of Labor in the covered area either individually or through an association, its affirmative action obligations on all work in the Plan area (including goals and timetables) shall be in accordance with that Plan for those trades which have unions participating in the Plan. Contractors must be able to demonstrate their participation in and compliance with the provisions of any such Hometown Plan. Each Contractor or Subcontractor participating in an approved Plan is individually required to comply with its obligations under the EEO clause, and to make a good faith effort to achieve each goal under the Plan in each trade in which it has employees. The overall good faith performance by other Contractors or Subcontractors toward a goal in an approved Plan does not excuse any covered Contractor's or Subcontractor's failure to take good faith efforts to achieve the Plan goals and timetables.

4. The Contractor shall implement the specific affirmative action standards provided in paragraphs 7a through p of these specifications. The goals set forth in the solicitation from which this contact resulted are expressed as percentages of the total hours of employment and training of minority and female utilization the Contractor should reasonably be able to achieve in each construction trade in which it has employees in the covered area. The Contractor is expected to make substantially uniform progress toward its goals in each craft during the period specified.

1. Neither the provisions of any collective bargaining agreement, nor the failure by a union with whom the Contractor has a collective bargaining agreement, to refer either minorities or women shall excuse the Contractor's obligations under these specifications, Executive Order 11246, nor the regulations promulgated pursuant thereto.

2. In order for the non-working training hours of apprentices and trainees to be counted in meeting the goals, such apprentices and trainees must be employed by the Contractor during the training period, and the Contractor must have made a commitment to employ the apprentices and trainees at the completion of their training, subject to the availability of employment opportunities. Trainees must be trained pursuant to training programs approved by the U.S. Department of Labor.

3. The Contractor shall take specific affirmative actions to ensure equal employment opportunity. The evaluation of the Contractor's compliance with these specifications shall be based upon its effort to achieve maximum results from its actions. The Contractor shall document these efforts fully, and shall implement affirmative action steps at least as extensive as the following:

    a. Ensure and maintain a working environment free of harassment, intimidation, and coercion at all sites, and in all facilities at which the Contractor's employees are assigned to work. The Contractor, where possible, will assign two or more women to each construction project. The Contractor shall specifically ensure that all foremen, superintendents, and other on-site supervisory personnel are aware of and carry out the Contractor's obligation to maintain such a working environment, with specific attention to minority or female individuals working at such sites or in such facilities.

    b. Establish and maintain a current list of minority and female recruitment sources, provide written notification to minority and female recruitment sources and to community organizations when the Contractor or its unions have employment opportunities available, and maintain a record of the organization's responses.

    c. Maintain a current file of the names, addresses and telephone numbers of each minority and female off-the-street applicant and minority or female referral from a union, a recruitment source or community organization and of what action was taken with respect to each such individual. If such individual was sent to the union hiring hall for referral and was not referred back to the Contractor by the union or, if referred, not employed by the Contractor, this shall be documented in the file with the reason therefore, along with whatever additional actions the Contractor may have taken.

    d. Provide immediate written notification to the Director when the union or unions with which the Contractor has a collective bargaining agreement has not referred to the Contractor a minority person or woman sent by the Contractor, or when the Contractor has other information that the union referral process has impeded the Contractor's efforts to meet its obligations.

    e. Develop on-the-job training opportunities and/or participate in training programs for the area which expressly include minority and women, including upgrading programs and apprenticeship and trainee programs relevant to the Contractor's employment needs, especially those programs funded or approved by the Department of Labor. The Contractor shall provide notice of these programs to the sources compiled under 7b above.

    f. Disseminate the Contractor's EEO policy by providing the notice of the policy to unions and training programs and requesting their cooperation in assisting the Contractor in meeting its EEO obligations; by including it in any policy manual and collective bargaining agreement; by publicizing it in the company newspaper, annual report, etc.; by specific review of the policy with all management personnel and with all minority and female employees at least once a year, and by posting the company EEO policy on bulletin boards accessible to all employees at each location where construction work is performed.

a. Review, at least annually, the company's EEO policy and affirmative action obligations under these specifications with all employees having any responsibility for hiring, assignment, layoff, termination or other employment decisions including specific review of these items with onsite supervisory personnel such as Superintendents, General Foremen, etc. prior to the initiation of construction work at any job site. A written record shall be made and maintained identifying the time and place of these meetings, persons attending, subject matter discussed, and disposition of the subject matter.

b. Disseminate the Contractor's EEO policy externally by including it in any advertising in the news media, specifically including minority and female news media, and providing written notification to and discussing the Contractor's EEO policy with other Contractors and Subcontractors with whom the Contractor does or anticipates doing business.

c. Direct its recruitment efforts, both oral and written, to minority, female and community organization, to schools with minority and female students and to minority and female recruitment and training organizations serving the Contractor's area and employment needs. Not later than one month prior to the date for the acceptance of applications for apprenticeship or other training by any recruitment source, the Contractor shall send written notification to organizations such as the above, describing the-openings, screening procedures, and test to be used in the selection process.

d. Encourage present minority and female employees to recruit other minority persons and women and, where reasonable, provide after school, summer and vacation employment to minority and female youth both on the site and in other areas of a Contractor's workforce.

e. Validate all tests and other selection requirements where there is an obligation to do so under 41 CFR Part 60-3.

f. Conduct, at least annually, an inventory and evaluation of all minority and female personnel for promotional opportunities and encourage these employees to seek or to prepare for, through appropriate training, etc. such opportunities.

g. Ensure that seniority practices, job classifications, work assignments and other personnel practices, do not have a discriminatory effect by continually monitoring all personnel and employment related activities to ensue that the EEO policy and the Contractor's obligations under these specifications are being carried out.

h. Ensure that all facilities and company activities are non-segregated except that separate or single-user toilet and necessary changing facilities shall be provided to assure privacy between the sexes.

i. Document and maintain a record of all solicitations of offers for subcontracts from minority and female construction contractors and suppliers, including circulation of solicitations to minority and female contractor associations and other business associations.

j. Conduct a review, at least annually of all supervisors' adherence to and performance under the Contractor's EEO policies and affirmative action obligations.

5. Contractors are encouraged to participate in voluntary associations which assist in fulfilling one or more of their affirmative action obligations (7a through p). The efforts of a contractor association, joint contractor- union, contactor-community, or other similar group of which the contractor is a member and participant, may be asserted as fulfilling any one or more of its obligations under 7a through p of these Specifications provided that the contractor actively participates in the group, makes every effort to assure that the group has a positive impact on the employment of minorities and women in the industry, ensures that the concrete

benefits of the program are reflected in the Contractor's minority and female workforce participation, makes a good faith effort to met its individual goals and timetables, and can provide access to documentation which demonstrates the effectiveness of actions taken on behalf of the Contractor. The obligation to comply, however, is the Contractor's and failure of such a group to fulfill an obligation shall not be a defense for the Contractor's noncompliance.

6. A single goal for minorities and a separate single goal for women have been established. The Contractor, however, is required to provide equal employment opportunity and to take affirmative action for all minority groups, both male and female, and all women, both minority and non-minority. Consequently, the Contractor may be in violation of the Executive Oder if a particular group is employed in a substantially disparate manner (for example, even though the Contractor has achieved its goals for women generally, the Contractor may be in violation of the Executive Order if a specific minority group of women is underutilized).

7. The Contractor shall not use the goals and timetables or affirmative action standards to discriminate against any person because of race, color, religion, sex, or national origin.

8. The Contractor shall not enter into any subcontract with any person or firm debarred from Government contracts pursuant to Executive Order 11246.

9. The Contractor shall carry out such sanctions and penalties for violation of these specifications and of the Equal Opportunity Clause, including suspension, termination and cancellation of existing subcontracts as may be imposed or ordered pursuant to Executive Order 11246, as amended, and its implementing regulations, by the Office of Federal Contract Programs. Any contractor who fails to carry out such sanctions and penalties shall be in violation of these specifications and Executive Order 11246, as amended.

10. The Contractor, in fulfilling its obligations under these specifications, shall implement specific affirmative action steps, at least as extensive as those standards prescribed in paragraph 7 of these specifications, so as to achieve maximum results from its efforts to ensure equal employment opportunity. If the Contractor fails to comply with the requirements of the Executive Order, the implementing regulations, or these specifications, the Director shall proceed in accordance with 41 CFR 60-4.8.

11. The Contractor shall designate a responsible official to monitor all employment related activity to ensure that the company EEO policy is being carried out, to submit reports relating to the provisions hereof as may be required by the Government and to keep records. Records shall at least include for each employee the name, address, telephone numbers, construction trade, union affiliation if any, employee identification number when assigned, social security number, race, sex, status (e.g., mechanic, apprentice, trainee, helper, or laborer), dates of changes in status, hours worked per week in the indicated trade, rate of pay, and locations at which the work was performed. Records shall be maintained in an easily understandable and retrievable form; however, to the degree that existing records satisfy this requirement, contractors shall not be required to maintain separate records.

12. Nothing herein provided shall be construed as a limitation upon the application of other laws which establish different standards of compliance or upon the application of requirements for the hiring of local or other area residents (e.g., those under the Public Works Employment Act of 1977 and the Community Development Block Grant Program).

NOTICE OF REQUIREMENT FOR AFFIRMATIVE ACTION TO ENSURE EQUAL EMPLOYMENT OPPORTUNITY (EXECUTIVE ORDER 11246) (43 FR 14895)

1. The Offeror's or Bidder's attention is called to the "Equal Opportunity Clause" and the "Standard Federal Equal Employment Opportunity Construction Contract Specifications" set forth herein.

2. The goals and timetables for minority and female participation expressed in percentage terms for the Contractor's aggregate workforce in each trade on all construction work in the covered areas, are as follows:

GOALS FOR FEMALE PARTICIPATION

APPENDIX A
(43 FR 19473)

The following goals and timetables for female utilization shall be included in all Federal and federally assisted construction contracts and subcontracts in excess of $10,000. The goals are applicable to the contractor's aggregate on-site construction workforce whether or not part of that workforce is performing work on a Federal of federally-assisted construction contract or subcontract. Area covered: Goals for Women apply nationwide.

Goals and timetables

Timetable		Goals (percent)
4-1-78	to 3-31-79	3.1
4-1-79	to 3-31-80	5.0
4-1-80	Until Further Notice	6.9

GOALS FOR MINORITY PARTICIPATION

Appendix B-80

Until further notice, the following goals for minority utilization in each construction craft and trade shall be included in all Federal or federally assisted construction contracts and subcontracts in excess of $10,000 to be performed n the respective geographical areas. The goals are applicable to each nonexempt contractor's total onsite construction workforce, regardless of whether or not part of that workforce is performing wok on a Federal, federally assisted or non- federally related project, contact or subcontract.

Construction contractors which are participating in an approved Hometown Plan (see 41 CFR 60-4-5) are required to comply with the goals of the Hometown Plan with regard to construction work they perform in the areas covered by the Hometown Plan. With regard to all their other covered construction work, such contractors are required to comply with the applicable SMSA or EA goal contained in this appendix B-80.

FEDERAL REGISTER / VOL. 45, NO. 194 / FRIDAY, OCTOBER 3, 1980 / NOTICES

State	Goal (percent)
Georgia:	
035 Augusta, GA:	
SMSA Counties:	
0600 Augusta, GA-SC	27.2
GA Columbia; GA Richmond, SC Aiken;	
Non-SMSA Counties	32.-8
GA Burke; GA Emanuel; GA Glascock; GA Jefferson; GA Jenkins; GA Lincoln; GA McDuffie, GA Talleferro; GA Warren; GA Wilkes; SC Allendale; SC Bamburg; SC Barnwell; SC Edgefield; SC McCormick;	
36 Atlanta, GA:	
SMSA Counties:	
0520 Atlanta, GA	21.2
GA Butts; GA Cherokee; GA Clayton; GA Cobb; GA DeKalb; GA Douglas; GA Fayette, GA Forsyth; GA Fulton; GA Gwinnett; GA Henry; GA Newton; GA Paulding; GA Rockdale; GA Walton	
Non-SMSA Counties	19.5
GA Banks; GA Barrow; GA Bartow; GA Carroll; GA Clarke; GA Coweta; GA Dawson; GA Elbert; GA Fannin; GA Floyd; GA Franklin; GA Gilmer; GA Gordon; GA Greene; GA Habersham; GA Hall; GA Haralson; GA Hart; GA Heard; GA Jackson; GA Jasper; GA Lamar; GA Lampkin; GA Madison; GA Morgan; GA Oconee, GA Oglethorpe; GA Pickins, GA Pike; GA Polk; GA Rabun; GA Spalding; GA Stephens; GA Towns; GA; Union; GA Upson White	
37 Columbus, GA:	
SMSA Counties:	
1800 Columbus, GA – AL	29.6
Al Russell; GA Chattahoochee; GA Columbus	

FEDERAL REGISTER / VOL. 45, NO. 194 / FRIDAY, OCTOBER 3, 1980 / NOTICES

Non-SMSA Counties	31.6
Al Chambers; AJ Lee; GA Harris; GA Marion; GA Meriwether; GA Quitman; GA Schley; GA Stewart; GA Sumter; GA Talbot:	

GA Troup;
GA Webster

38 Macon, GA: SMSA
Counties:
4680 Macon, GA 27.5
GA Bibb; GA Houston; GA Jones; GA Twiggs
Non-SMSA Counties 31.7
GA Baldwin; GA Bleckley; Crawford; GA Crisp; GA Dodge; GA Dooly; GA Hancock; GA Johnson; GA Laurens; GA Macon; GA Monroe; GA Peach; GA Pulaski; GA Putman; GA Taylor; GA Telfair; GA Treutlan; GA Washington; GA Wheeler; GA Wilcox; GA Wilkinson

39 Savannah, GA: SMSA
Counties:
7520 Savannah, GA..... 30.6
GA Bryan; GA Chatham; GA Effingham

Non-SMSA Counties 29.8
GA Appling; GA Atkinson; GA Bacon, GA Bulloch; GA Candler; GA Coffee; GA Evans; GA Jeff Davis; GA Liberty; GA Long; GA McIntosh; GA Montgomery; GA Screven; GA Tattnall; GA Toombs; GA Wayne; SC Beaufort; SC Hampton; SC Jasper

40 Albany, GA: SMSA
Counties:
0120 Albany, GA..... 32.1
GA Dougherty; GA Lee

Non-SMSA Counties 31.1
GA Baker; GA Ben Hill; GA Berrien; GA Brooks; GA Calhoun; GA Clay; GA Clinch; GA Colquitt; GA Cook; GA Decatur; GA Early; GA Echols; GA Grady; GA Irwin; GA Lanier; GA Lowndes; GA Miller; GA Mitchell; GA Randolph; GA Seminole; GA Terrell; GA Thomas; GA Tift; GA Turner; GA Worth

Florida:
41 Jacksonville FL:
Non-SMSA Counties 22.2
GA Brantley; GA Camden; GA Charlton; GA Glynn; GA Pierce; GA Ware

EXHIBIT "G"

DEPARTMENT OF TRANSPORTATION
STATE OF GEORGIA

First Use 2013 Specifications: November 01, 2013

SPECIAL PROVISION

PROMPT PAYMENT:

Prime Contractors, who sublet a portion of their work, shall pay their subcontractors for satisfactory performance of their contracts no later then 10 calendar days from receipt of each payment made to them.

Any delay or postponement of payment among the parties may take place only for good cause with prior written approval from the Department.

If the contractor is found to be in noncompliance with these provisions, it shall constitute a breach of contract and further payments for any work performed may be withheld until corrective action is taken. If corrective action is not taken, it may result in termination of the contract.

All subcontract agreements shall contain this requirement.

EXHIBIT "H"

DEPARTMENT OF TRANSPORTATION
STATE OF GEORGIA

REQUIRED CONTRACT PROVISIONS FOR FEDERAL-AID CONTRACTS

BUY AMERICA

First Use 2013 Specifications: November 1, 2013

All manufacturing processes for steel and iron materials and steel and iron coatings permanently incorporated into this project must occur in the United States of America. However, pig iron and processed, pelletized, or reduced iron ore used in the production of these products may be manufactured outside the United States.

This requirement, however, does not prevent a minimal use of foreign materials and coatings, provided the cost of materials and coatings used does not exceed one-tenth of one percent (0.1 percent) of the total contract cost or $2,500.00, whichever is greater.

NOTE: Coatings include: epoxy coating, galvanizing, painting and any other coating that protects or enhances the value of the material.

CONVICT PRODUCED MATERIALS

First Use 2013 Specifications: November 1, 2013

Materials produced by convict labor after July 1, 1991, may not be used for Federal-Aid highway construction projects unless it meets the following criteria:

1. The materials must be produced by convicts who are on parole, supervised release or probation from a prison; or,

2. If produced in a qualified prison facility, the amount of such materials produced in any 12-month period shall not exceed the amount produced in such facility for such construction during the 12-month period ending July 1, 1987. A qualified prison is defined as one producing convict made materials prior to July 1, 1987.

First Use Date: January 1, 2007
Revised: March 26, 2008
March 5, 2009
September 30, 2009
August 6, 2012

EXHIBIT "I"

DEPARTMENT OF TRANSPORTATION
STATE OF GEORGIA

SPECIAL PROVISION

Utility Conflicts

Utility companies having known facilities that conflict with the construction of this project will be directed by the Department to adjust or relocate their facilities and will be notified of the contract award.

Conform to all the requirements of the Specifications as they relate to cooperation with utility owners and the protection of utility installations that exist on the project. Refer to the requirements of Section 107, Legal Regulations and Responsibility to the Public, with particular attention to Subsection 107.21.

Coordinate The Work with any work to be performed by others in any right of way clearance and arrange a schedule of operations that will allow for completion of the Project within the specified contract time. Where stage construction is required, notify the utility owner when each stage of work is completed and the site is available for utility work to proceed.

Information concerning utility facilities known to exist within the project limits, including the list of owners, is available for reference.

Under Georgia Code Section 32-6-171, utilities are required to remove or relocate their facilities. The Department is required to give the utility at least 60 days written notice directing the removal, relocation, or adjustment and the utility owner is required to begin work within the time specified in the utility's work plan or revised work plan.

Upon request, copies of all approved Work Plans submitted by utility companies having facilities on this project will be made available for examination by the Contractor at the Department's District Office. Utility Adjustment Schedules, when submitted to the Department by the utilities, will be made available to the Contractor after the Notice to Contractors has been posted by the Office of Construction Bidding Administration. The Contractor is responsible for considering in its bid all existing and proposed utility locations and the removals, relocations, and adjustments specified in the Utility's Work Plan.

For this Project, Utility Owners that are required to remove, relocate, or adjust their facility to accommodate the construction of this Project may be liable to the Contractor for damages or delay costs resulting from the Utility Owner's failure to clear conflicts

within the time specified in the approved Utility Work Plan. If the Utility Owner is unable to submit and obtain Department approval of a revised Work Plan or fails to complete the removal, relocation, or adjustment of its facilities in accordance with the approved Work Plan, the Utility Owner may be liable to the Department, or the Contractor, for damages or delay costs.

In accordance with Subsection 105.06 of the Specifications, the Department is not liable for payment of any claims due to utility delays, inconvenience or damage sustained by the Contractor due to interference of any utilities or appurtenances, or the operation of moving them.

In any case in which the Contractor believes that it will be entitled to damages or delay costs from the Utility Owner in accordance with O.C.G.A. 32-6-171, the Contractor shall provide written notice to the Utility Owner and the Department within ten (10) days from the time of the dispute or potential dispute is identified. The Contractor shall follow the Procedures for Utility Damages or Delay Costs outlined in the latest edition of The Utility Accommodation Policy and Standards Manual. Failure to follow the above will result in waiver of the Contractor's claim against the Utility Owner for damages or delay costs.

In accordance with Subsection 107.21.G delays by utilities will continue to be considered by the Department in charging Contract Time. For purposes of applying provisions of this paragraph, railroads and the Metropolitan Atlanta Rapid Transit Authority (MARTA) are considered utilities.

Office of Utilities

EXHIBIT "J"

COMMERCIALLY USEFUL FUNCTION (CUF)
PROJECT SITE REVIEW *(CONSTRUCTION PROJECTS)*

GDOT EEO 5/2014

Per 49 CFR 26.55, "*A DBE performs a commercially useful function when it is responsible for execution of the work of the contract and is carrying out its responsibilities by actually performing, managing, and supervising the work involved*". It is the primary responsibility of the Prime Contractor to ensure that the DBE is performing a CUF. The Department, as the contracting agency, has oversight responsibility to ensure that the Prime Contractor has effectively met this responsibility under its contract with the Department.

- Document a minimum of one review for each DBE for each project with a DBE goal. File the completed form in the official project records with the applicable DBE report. The review should be started when the DBE first begins work and is not complete until the DBE has received a payment. Continue to monitor compliance through the course of the project. Use the CUF form to document any further noted concerns or inconsistencies. Contact the District EEO Officer if you believe a DBE may not be performing a Commercially Useful Function (CUF), or if you have any questions related to the program. This form does not document every possible question or concern. Monitoring the DBE for CUF is a continuous process through the life of the project.

Project Number: County: Prime Contractor:	GDOT Reviewer: Reviewer's Title: Review Date:
DBE Name:	
DBE is performing as a Contractor: The Prime Contractor ☐ A Subcontractor ☐ A Tier Subcontractor ☐ DBE is performing as a Material Supplier: A Manufacturer ☐ A Regular Dealer ☐ A Broker ☐	
Scope of Work Provide a brief description of the DBE's scope of work. (Refer to Subcontract Agreement and/or Purchase Order if needed.)	

	YES	NO
A. Prime Contractor Interview and Subcontract Approval		
1. Does the Prime Contractor have a process in place to substantiate the DBE's CUF and the allowable credit toward the DBE goal in the Contract?	☐	☐
2. Is the DBE only using equipment it owns, rents, or leases? (Obtain copies of all rent or lease agreements).	☐	☐
3. Is the DBE performing *at least* 30% of their work described in the subcontract?	☐	☐
4. Does the DBE hauling firm own or lease their trucks? (Obtain copies of lease agreements, if applicable).....(NA ☐)	☐	☐
B. Field Observations during work inspection and Payroll Inspection		
1. Is the DBE firm supervising its employees and their work?	☐	☐
2. Is the supervisor a full-time employee of the DBE?	☐	☐
3. Is the DBE working without assistance from the prime contractor or another subcontractor? (Use of prime's equipment in an emergency is allowed but the cost associated with the use of the equipment cannot be credited towards the goal.)	☐	☐
4. Are DBE leased trucks properly placard?	☐	☐
C. Labor Interviews		
1. Does the DBE have employees on the job to perform the work?	☐	☐
2. Do the DBE's employees only work for the DBE?	☐	☐
D. Material Invoice Inspection		
1. Does a review of the haul tickets associated with the project indicate that hauling is being performed by the DBE?.....(NA ☐)	☐	☐
2. Does the DBE's name appear on all invoices, haul tickets, and/or bills of lading?	☐	☐
E. Commensurate		
1. Is Payment received by the DBE comparable with the work being performed? (Comparison of DBE report, canceled checks, subcontract, and inspection pay reports).	☐	☐
F. Joint Checks... *(if applicable)*		
1. Is the Prime paying the DBE and the DBE's Supplier with one check?	☐	☐
2. Has the Department approved the use?	☐	☐
G. CUF		
1. Does the DBE appear to be performing a Commercially Useful Function (CUF)? (If no, provide comments and ***contact your District EEO Officer at _____***	☐	☐

COMMENTS: *if any response recorded in section A- E is "no", comments explaining the "no" are mandatory.* Attach a 2nd page if necessary.

EXHIBIT “K”

IFB #18-026-CW WIDENING AND RECONSTRUCTION OF JEFFERSONVILLE ROAD FROM S.R. 3/EMERY HWY TO RECREATION RD AND MILLERFIELD RD FROM JEFFERSONVILLE RD TO BRISTOL DR
IN BIBB COUNTY, GEORGIA

PROJECT SPECIFIC SPECIAL PROVISIONS

Included as a part of the Contract and attached are as follows:

Section 105 – Control of Work
Section 107.21 – Legal Regulations and Responsibility to the Public (WUCS)
Section 107.23 – Legal Regulations and Responsibility to the Public (Protected Species)
Section 108.08 – Prosecution and Progress
Section 108.08C – Prosecution and Progress
Section 109 – Measurement and Payment
Section 150 – Traffic Control
Section 150.6 – Traffic Control Special Conditions
Section 161 – Control of Soil Erosion and Sedimentation
Section 163 – Miscellaneous Erosion Control Items
Section 165 – Maintenance of Temporary Erosion and Sedimentation Control Devices
Section 167 – Water Quality Monitoring
Section 402 – Hot Mix Recycled Asphaltic Concrete
Section 500 – Concrete Structures
Section 511 – Reinforcement Steel
Section 524 – Drilled Caisson Foundations
Section 615 – Jacking or Boring Pipe
Section 647 – Traffic Signal Installation
Section 660 – Sanitary Sewers
Section 670 – Water Distribution System
Section 687 – Traffic Signal Timing
Section 700 – Grassing
Section 925 – Traffic Signal Equipment

March 12, 2014

DEPARTMENT OF TRANSPORTATION
STATE OF GEORGIA

SPECIAL PROVISION

Project: STP00-3223-00(002) BIBB COUNTY

P. I. NO. 342080

STP00-3223-00(004) BIBB COUNTY

P. I. NO. 351090

BRMLB-3223(6) BIBB COUNTY

P. I. NO. 351095

SECTION 105 – CONTROL OF WORK

Add the following to the end of Subsection 105.07:

The following project is located in the vicinity of the project area:

P.I. No. 351130 STP00-3213-00(003) Widening and Reconstruction of Forest Hill Road (SR 1125) (CR 723)

OFFICE OF PROGRAM DELIVERY

Date: April 23, 2009
First Use Date 2001 Specifications: May 17, 2006
Revised: December 8, 2008

DEPARTMENT OF TRANSPORTATION
STATE OF GEORGIA

SPECIAL PROVISION

Project: STP00-3223-00(002) BIBB COUNTY
P. I. NO. 342080
STP00-3223-00(004) BIBB COUNTY
P. I. NO. 351090
BRMLB-3223(6) BIBB COUNTY
P. I. NO. 351095

Section 107—Legal Regulations and Responsibility to the Public

Delete Subsection 107.21 and Substitute the following:

107.21—Contractor's Worksite Utility Coordination Supervisor

107.21 General Description

The Contractor shall designate, prior to beginning any work, a Worksite Utility Coordination Supervisor (WUCS) who shall be responsible for initiating and conducting utility coordination meetings and accurately recording and reporting the progress of utility relocations and adjustment work. Also, the WUCS shall prepare an Emergency Response Plan for the purpose of planning, training, and communicating among the agencies responding to the emergency. The WUCS shall be the primary point of contact between all of the Utility companies, the Contractor and the Department. The WUCS shall recommend the rate of reoccurrence for utility coordination meetings and the Engineer will have the final decision on the regularity for utility coordination meetings. In no case will utility coordination meetings occur less than monthly until controlling items of utility relocations and adjustment milestones are completed. The WUCS shall contact each of the utility companies for the purpose of obtaining information including, but not limited to, a Utility Adjustment Schedule for the controlling items of utility relocations and adjustments. The WUCS shall notify the appropriate utility company and/or utility subcontractors and the Department of the status of controlling items of relocations and adjustment milestones as they are completed. The WUCS shall furnish the Engineer, for approval, a Progress Schedule Chart, immediately following the receipt of the Notice to Proceed unless otherwise specified, which includes the utility companies controlling items of work and other information in accordance with Section 108.03 or elsewhere in the Contract documents.

A. Qualifications

The WUCS shall be an employee of the Prime Contractor, shall have at least one year experience directly related to highway and utility construction in a supervisory capacity and have a complete understanding of

the Georgia Utilities Protection Center operations, and shall be knowledgeable of the High-voltage Safety Act and shall be trained on the Georgia Utility Facility Protection Act (GUFPA). The Department does not provide any training on GUFPA but will maintain a list of the Georgia Public Service Commission certified training programs developed by other agencies. Currently the following companies offer approved GUFPA training programs:

Associated Damage Consultants
Phone: 706.234.8218 or 706.853.1362

Georgia Utility Contractors Association
Phone: 404.362.9995

Georgia Utilities Protection Center
Phone: 678.291.0631 or 404.375.6209

H B Training & Consulting
Phone: 706.619.1669 or 877.442.4282 (Toll Free)

The Prime Contractor is responsible for obtaining the GUFPA training for their employees.

Questions concerning the Georgia Public Service Commission GUFPA training program should be directed to:

Georgia Public Service Commission
244 Washington St. SW
Atlanta, GA 30334-5701
404.463.9784

B. Ticket Status

During the utility coordination meetings the WUCS shall collect and maintain the Ticket Status information to determine the status of all locate requests within the project limits. This information will be used to assure those planning to use mechanized equipment to excavate or work within the project limits are prepared to begin work when they have reported or estimated beginning work. At points where the Contractor's or utility company's operations are adjacent to or conflict with overhead or underground utility facilities, or are adjacent to other property, damage to which might result in considerable expense, loss, or inconvenience, work shall not commence until all arrangements necessary for the protection thereof have been made.

C. Notice

The names of known utility companies and the location of known utility facilities will be shown on the Plans, or listed in the Subsurface Utility Engineering Investigation if performed or in the Special Provisions; and the WUCS shall give 24-hour notice to such utility companies before commencing work adjacent to said utility facilities which may result in damage thereto. The WUCS shall further notify utility companies of any changes in the Contractor's work schedules affecting required action by the utility company to protect or adjust their facilities. Notice to the utility companies by the Department of the Award of Contract, under Subsection 105.06, shall not be deemed to satisfy the notice required by this paragraph. Furthermore, this 24-hour notice shall not satisfy or fulfill the requirements of the Contractor as stated in Chapter 9 of Title 25 of the Official Code of Georgia Annotated, known as the "Georgia Utility Facility Protection Act".

D. Agenda

The WUCS shall cooperate with the companies of any underground or overhead utility facilities in their removal and relocations or adjustment work in order that these operations may progress in a reasonable manner, that duplication of their removal and relocations or adjustment work may be reduced to a minimum, and services rendered by those parties will not be unnecessarily interrupted. To promote this effort the WUCS shall prepare an agenda for the utility coordination meetings and circulate same in advance of the meeting to encourage input and participation from all of the utility companies. The agenda will be prepared by an examination of the project site and may include photographs of potential/actual utility conflicts.

E. Emergency Response Plan

The WUCS shall prepare an Emergency Response Plan within 30 days following the receipt of the Notice to Proceed. The WUCS shall clearly mark and highlight the gas, water and other pressurized pipeline shut-off valves and other utility services including overhead switch locations on the utility plans; and prepare a chart to indicate the location of each site (Street address or intersections), the utility company or operator of the facility with emergency contact information and the working condition of the device to facilitate prompt shut-off. The WUCS shall post the Emergency Response Plan in an area readily accessible to the Department. In the event of interruption to gas, water or other utility services as a result of accidental breakage or as a result of being exposed or unsupported, the WUCS shall promptly notify the appropriate emergency officials, the Georgia Utilities Protection Center and the appropriate utility facility company or operator, if known. Until such time as the damage has been repaired, no person shall engage in excavating or blasting activities that may cause further damage to the utility facility.

F. Submission

Provisions for reporting all utility coordination meetings, the progress of utility relocation and adjustment work milestones and ticket status information will be reported on a form developed by the WUCS and will be distributed by the WUCS to all of the utility companies as milestones are met and shall be included as part of the project records. These reports shall be delivered to the Engineer for review, on a monthly basis. The WUCS shall immediately report to the Engineer any delay between the utility relocation and adjustment work, the existing Utility Adjustment Schedule, or the proposed Utility Adjustment Schedule so that these differences can be reconciled.

G. Delays

Delays and interruptions to the controlling Item or Items of The Work caused by the adjustment or repair of water, gas, or other utility appurtenances and property will not be charged against the Contract Time unless such delays are due to the negligence of the Contractor.

H. Facilities Supported on Bridges

If the utility facilities are to be supported on bridges, the following provisions shall apply:

1. The Plans will show the location of the facility and the auxiliary items necessary to support the facility.

2. The Contractor constructing the bridge shall install anchor bolts, thimbles, inserts, or other auxiliary items attached to the bridge as a part of the support for the utility facility. The Utility Company shall furnish these auxiliary items, unless the Contract indicates these items are to be furnished by the Contractor as a part of the bridge construction.

3. The Utility or its subcontractor constructing the utility facility shall install hanger rods, pipe rollers, and other attachments necessary for the support of the utility facility as indicated on the Plans. The Utility Company shall furnish these attachments at no cost to the Department or the prime contractor unless otherwise specified. This work shall also include:

a. Caulking the openings around the utility where it passes through endwalls to prevent the

passage of undesirable materials.

b. Painting the exposed portions of utility supports unless such supports are corrosion resistant. Painting shall be done in accordance with the applicable portions of Section 535, unless otherwise specified.

4. The sequence of bridge construction work may be set forth in the Plans and/or the Special Provisions and will show at what stage of the Work a utility company will be allowed to make the utility installation. Further, all or any portion of The Work under Subsection 107.21.H.3 may be included in the bridge Contract by the Plans and/or the Special Provisions.

5. Any damage to the bridge structure caused by the utility installation shall be repaired to the satisfaction of the Engineer at the expense of the Utility or its subcontractor installing the utility facility.

I. Clearances

The Plans provide for at least minimum clearance of utilities as required by the National Electrical Safety Code, U.S. Department of Commerce, National Bureau of Standards. Any additional clearance the Contractor may desire or require in performing The Work shall be arranged by the Contractor with the utility company. The Department will pay no extra compensation for such additional clearances.

Georgia Power Restrictions around Transmission Facilities

Work on the new bridge over Walnut Creek will require operation of equipment near transmission lines during part of the construction. Georgia Power may be able to de-energize one, two, or all three transmission lines depending on system conditions, time of year, weather conditions and other on-going work. The outage of three lines would have to be of short duration, 2-4 days. Georgia Power anticipates that the most likely scenario is expected to be two lines out for 5-7 days.

The ability to obtain a necessary transmission line outage for resolution of any CONTRACTOR constructability issue will be under the direction and sole control of Georgia Power's Georgia Control Center. Georgia Power will not be responsible for any delay or additional cost incurred by CONTRACTOR due to inability to obtain a transmission line outage to meet CONTRACTOR's planned project schedule. Outages are granted based on federally-mandated transmission system reliability requirements, as well as existing Georgia Integrated Transmission System (ITS) requirements. A scheduled outage may be cancelled or re-scheduled, without notice, due to transmission system conditions, including, but not limited to: changing transmission system conditions or priorities; customer requirements; or transmission system emergency requirements.

CONTRACTOR is encouraged to identify project needs and submit any transmission line outage request as early as possible. Each outage request must be reviewed in conjunction with other known outages to ensure that transmission system reliability is maintained. Early submission of an outage request provides the best possibility of obtaining an outage that meets the project schedule.

Georgia Power will negotiate with the CONTACTOR on the require clearances to be maintain away from de-energized conductors. That determination will be made based on the stability and reliability of control of the equipment adjacent to the conductors. This is to ensure that the conductors are not damaged by the equipment used by the CONTRACTOR. Georgia Power also requires a minimum 15' horizontal clearance between any transmission structure, down guy, and other supporting structures and contractor vehicles of any kind.

Clearances from energized conductors must be determined by the responsible party conducting the work within the area utilizing applicable federal, state, and other codes, laws, rules, and regulations. Grounding requirements for equipment in the area are at the discretion of the responsible party conducting the work within the area. The responsible party shall follow all applicable federal, state, and other codes, laws, rules, and regulations relating to grounding equipment in the vicinity of energized electrical lines. Georgia Power recommends that all equipment within the work area should be grounded.

The responsible party conducting the work within the area will be required to provide a contact person that will be on-site at all times during the outage. The contact person shall be available to stop all work and clear the area in a short period of time so the line(s) can be re-energized when directed by Georgia Power.

Provide proper traffic control and signage at all times in accordance with the Manual on Uniform Traffic Control Devices (MUTCD)

The coordinating contact for Georgia Power is Dan Everitt, deeverit@southernco.com.

J. Utility Adjustment Schedule

The purpose of the Utility Adjustment Schedule is to provide the Contractor with the pertinent information, including any utility staging required, dependent activities, or joint-use coordination that is required for the creation of a progress schedule chart that is feasible. A suitable Utility Adjustment Schedule form is available from the Department for the WUCS to circulate to utility companies for any proposed project construction staging or should a utility company not duly file a Utility Adjustment Schedule to the Department during the preconstruction phase of the project. The WUCS shall submit the Progress Schedule Chart in accordance with Section 108.03 and the proposed Utility Adjustment Schedules from all utility companies to the Engineer for review and approval. Copies of existing Utility Adjustment Schedules with utility companies having facilities on this project will be made available at the Macon-Bibb County Department of transportation and Development, 7960 North McDonough Street, Jonesboro, Georgia 30236, for examination by the Contractor.

K. Compensation

There will be no separate measurement or payment for this Work. The cost associated with this Work shall be included in the overall Bid submitted.

July 19, 2016

DEPARTMENT OF TRANSPORTATION
STATE OF GEORGIA

SPECIAL PROVISION

Bibb County
P.I. # 351090/351095, 342080, 351080, & 0000835

Section 107 – Legal Regulations and Responsibility to the Public

---

Add the following to Subsection 107.23:

H. Protection of State Protected Species

The following conditions are intended as a minimum to protect this species and its habitat during any activities that are in close proximity to the known location(s) of this species.

1. All Project personnel employed on this Project shall be notified about the potential presence and appearance of the state protected goldstripe darter (*Etheostoma parvipinne*). The goldstripe darter is protected in the State of Georgia under the Georgia Endangered Wildlife Act of 1973. All personnel shall be advised that there are penalties for capturing, killing, or selling protected species under the Georgia Endangered Wildlife Act of 1973. Suitable habitat for the goldstripe darter has been identified in PS 1, PS 2, PS 5, and PS 7. Pictures and habitat information will be provided to the Contractor at the preconstruction conference and shall be posted in a conspicuous location in the Project field office until such time that Project construction has been completed and time charges have stopped.

2. Equipment staging areas and equipment maintenance areas (particularly for oil changes) shall be located at least 200 feet from the banks of PS 1, PS 2, PS 5, and PS 7 to minimize the potential for wash water, petroleum products, or other contaminants from construction equipment entering the stream.

3. Excavation spoils and stockpiled materials shall be placed at least 200 feet away from the banks of PS 1, PS 2, PS 5, and PS 7 to minimize the potential for rain runoff into the stream.

4. Pesticides and herbicides shall not be used within 200 feet of the banks of PS 1, PS 2, PS 5, and PS 7. Within 200 feet of the banks of PS 1, PS 2, PS 5, and PS 7, fertilizer shall only be used while grassing graded areas to achieve site stabilization.

5. Project Engineer shall be notified immediately in the event of an erosion control failure that allows discharge of sediment into PS 1, PS 2, PS 5, and PS 7. The Project Engineer, in turn, shall notify the State Environmental Administrator, Georgia Department of Transportation, Office of Environmental Services at (404) 631-1101.

6. In the event any incident occurs that causes harm/injury to the goldstripe darter in the Project corridor, the incident shall be reported immediately to the Project Engineer who, in turn, will notify the State Environmental Administrator, Georgia Department of Transportation, Office of Environmental Services at (404) 631-1101.

7. A log shall be kept detailing any incidents that could cause harm/injury to the goldstripe darter in the Project until such time that Project construction has been completed and time charges have stopped. Following

July 19, 2016

107.23H Protection of Federal and State Protected Species
PI# 351090/351095, 342080, 351080, & 0000835
Bibb County

Project completion, the log and a report summarizing any incidents involving this species shall be submitted by the Contractor to the Project Engineer and the State Environmental Administrator, Georgia Department of Transportation, Office of Environmental Services, 600 West Peachtree Street NW, Atlanta, Georgia 30308. GDOT, in turn, shall provide copies of the report to the Georgia Department of Natural Resources, Wildlife Resources Division, and the Federal Highway Administration.

8. All costs pertaining to any requirement contained herein shall be included in the overall bid submitted unless such requirement is designated as a separate Pay Item in the Proposal.

April 26, 2017

DEPARTMENT OF TRANSPORTATION

STATE OF GEORGIA

SPECIAL PROVISION

Project: STP00-3223-00(002) & BRMLB-3223(6)
BIBB COUNTY
P. I. NO. 342080 & 351095

SECTION 108—PROSECUTION AND PROGRESS

Retain subsection 108.08 as written and add the following:

108.08 Failure or Delay in Completing Work on Time

For this project, an overall completion date has been established.

1. ***Failure to re-open travel lanes as specified in Subsection 150.6A will result in assessment of liquidated damages at the rate of $1000.00 per hour or portions thereof.***
2. ***Failure to comply with the work restrictions as specified in Special Provision 150.6B will result in the assessment of Liquidated Damages in the amount of $1000 per hour or portions thereof.***

These rates are cumulative and in addition to the Liquidated Damages which may be assessed in accordance with Subsection 108.08 for failure to complete the overall project on time.

April 26, 2017

DEPARTMENT OF TRANSPORTATION

STATE OF GEORGIA

SPECIAL PROVISION

Project: STP00-3223-00(004)
BIBB COUNTY
P. I. NO. 351090

SECTION 108—PROSECUTION AND PROGRESS

Retain subsection 108.08 as written and add the following:

108.08 Failure or Delay in Completing Work on Time

For this project, an overall completion date has been established.

1. ***Failure to re-open travel lanes as specified in Subsection 150.6A will result in assessment of liquidated damages at the rate of $1000.00 per hour or portions thereof.***
2. ***Failure to comply with the work restrictions as specified in Special Provision 150.6B will result in the assessment of Liquidated Damages in the amount of $1000 per hour or portions thereof.***

These rates are cumulative and in addition to the Liquidated Damages which may be assessed in accordance with Subsection 108.08 for failure to complete the overall project on time.

First use: June 08, 2017

DEPARTMENT OF TRANSPORTATION

STATE OF GEORGIA

SPECIAL PROVISION

P.I. NO.: 351090/351095, 342080, 351080, & 0000835

COUNTY: Bibb

Section 108 – Prosecution and Progress

Add the following to Sub-section 108.08:

C. Intermediate Contract Time

1. Special Conditions – US Army Corps of Engineers Regional Permit

The US Army Corps of Engineers 404 permit authorization for the project will expire on September 30, 2018. All work in streams, wetlands, and other jurisdictional waters of the US authorized by this permit must be completed by September 30, 2018. Until new permit authorization is obtained from the US Army Corps of Engineers, any work conducted within jurisdictional waters of the US after September 30, 2018 would constitute a violation of the federal Clean Water Act. In an effort to prevent such a violation from occurring, a separate intermediate completion date of August 31, 2018 is established for the completion of all permanent and temporary construction activities in all jurisdictional waters of the US listed below.

Resource name	Location		Side	Construction activity	Permitted impact
	Beginning station	Ending station			
Perennial Stream 1	1+536	1+525	BOTH	Pipe replacement	138 linear feet of pipe replacement impact
Intermittent Stream 1c	1+705	1+675	BOTH	Pipe replacement	40 linear feet of pipe replacement impact
Perennial Stream 2	2+145	2+183	BOTH	Construction of Bent 2 of the proposed bridge and use of rock jetty for demolition of the existing bridge and construction of the proposed bridge.	94 linear feet of permanent fill impact and 67 feet of temporary fill impact
Intermittent Stream 3a	5+395	5+385	RIGHT	Pipe replacement and placement of rip-rap	68 linear feet of pipe replacement impact and 18 feet of bank armor

First use: June 08, 2017

108.08 Intermediate Contract Time, P.I. No. 351090/351095, 342080, 351080, & 0000835

					impact
Intermittent Stream 4	**2+948**	**2+936**	**BOTH**	**Pipe replacement and placement of rip-rap**	**108 linear feet of pipe replacement impact and 13 feet of bank armor impact**
Ephemeral Channel 4a	**3+056**	**3+060**	**RIGHT**	**Pipe replacement and placement of rip-rap**	**66 linear feet of pipe replacement and bank armor impact**
Perennial Stream 5	**5+428**	**5+438**	**BOTH**	**Culvert replacement**	**68 linear feet of culvert replacement**
Intermittent Stream 5a	**5+655**	**5+635**	**RIGHT**	**Filling the stream channel**	**81 linear feet of fill impact**
Wetland 6	**5+980**	**6+063**	**BOTH**	**Filling and clearing the wetland**	**0.06 acre of fill and 0.07 acre of clearing impact**
Perennial Stream 7	**6+085**	**6+075**	**BOTH**	**Culvert replacement**	**111 linear feet of culvert replacement impact**

Failure to complete the permanent and temporary construction activities in jurisdictional waters of the US by the specified intermediate completion date of August 31, 2018 will result in the assessment of liquidated damages in the amount of $10,000 per calendar day, up to and including the permit expiration date of September 30, 2018, that any such work is incomplete.

For the proposed placement of fill within jurisdictional waters of the US to be considered complete, the minimum depth of fill having been placed by the Contractor shall be three (3) feet or to the top of the proposed subgrade, whichever is less.

With the exception of traffic control and erosion control, no activities within jurisdictional waters of the US shall continue after September 30, 2018.

The Contractor will not be allowed to resume work within the listed jurisdictional waters of the US until the Department secures US Army Corps of Engineers 404 permit re-authorization.

The Contractor shall protect and hold harmless the Department from any and all damages or claims that may arise due to inconvenience, delay, or loss experienced as a result of the need to discontinue construction activities in jurisdictional waters of the US until the Department secures US Army Corps of Engineers 404 permit re-authorization.

First Use Date: November 22, 2013

DEPARTMENT OF TRANSPORTATION
STATE OF GEORGIA

SPECIAL PROVISION

Section 109—Measurement and Payment

Add the following:

109.11 Price Adjustments

A. Asphalt Cement Price Adjustments will be computed on a ***monthly*** basis in accordance with the following:

PA = Price Adjustment.
APM= the "Monthly Asphalt Cement Price (Georgia Base Asphalt Price)" for the month the hot mix asphalt/bituminous tack/bituminous surface treatment is placed.
APL = the "Monthly Asphalt Cement Price (Georgia Base Asphalt Price)" for the month which the project was let.
TMT = Total Monthly Tonnage of asphalt cement computed by the Engineer based on the Hot Mix Asphaltic Concrete of the various types per ton (megagram)//Total Monthly Tonnage of asphalt cement used for bituminous tack coat (asphalt cement tack coat only, emulsified bituminous materials for tack coat are excluded) converted from gallons to tons (megagrams) by the Engineer//Total Monthly Tonnage of asphalt cement used for bituminous surface treatment (total gallons of asphalt emulsion used, as measured from distributors, will be multiplied by a factor of 0.65 to determine the quantity in gallons of asphalt cement used) converted from gallons to tons (megagrams) by the Engineer and certified for payment.

a. If the asphalt cement price for the month is *greater* than the asphalt cement price for the month in which the project was let to contract, the contractor will be paid an amount calculated in accordance with the following formula:

PA = [((APM-APL)/APL)] x TMT x APL

b. If the asphalt cement price for the month is *less* than the asphalt cement price for the month in which the project was let to contract, the Department will deduct an amount calculated in accordance with the following formula:

PA = [((APM-APL)/APL)] x TMT x APL

1. **"Monthly Asphalt Cement Price":** The Department will determine the "Monthly Asphalt Cement Price" based on the following formulas:

Monthly Asphalt Cement Price = 100% Georgia Base Asphalt Price;

Where;

GBAP = "Georgia Base Asphalt Price", (in dollars/ton) is based on the arithmetic average posted price of PG asphalt cement as specified in Section 820, from the Department's monthly survey obtained from approved asphalt cement suppliers of bituminous materials to the Department projects F.O.B. the suppliers terminal. However, the highest price and the lowest price are excluded from the calculation of price, GBAP.

2. **"Asphalt Cement Quantity Calculation":** The calculation of asphalt cement quantity for each mix type will be based on the asphalt cement content (***AC %***) of the approved Job Mix Formula (JMF) as specified in Subsection 400.1.03.C. The following calculation formula will be used to determine asphalt cement quantity:

Section 109—Measurement and Payment

Asphalt Cement Quantity = Hot Mix Asphaltic Concrete monthly total in tons (megagrams) per mix type certified for the payment x ***AC (%)***

The Total Monthly Tonnage (TMT) of asphalt cement computed by the Engineer will be calculated as follows:

TMT = Sum of all asphalt cement quantities, including polymer modified asphalt binder and non-modified asphalt cement, based on the Hot Mix Asphaltic Concrete of the various mix types per ton (megagram)// Sum of all asphalt cement quantities used as bituminous tack coat converted from gallons to tons (megagrams)// Sum of all asphalt cement quantities used for bituminous surface treatment (total gallons of asphalt emulsion used, as measured from distributors, will be multiplied by a factor of 0.65 to determine the quantity in gallons of asphalt cement used) converted from gallons to tons (megagrams) by the Engineer certified for payment.

Asphalt Cement Price for the Month (APM) will be adjusted monthly. Price adjustments (PA) will be made monthly and all calculations for Price Adjustments shall be performed by the Engineer as specified in SOP-39 "Determination of Asphalt Cement Index and Asphalt Cement Price Adjustment".

B. **Price Adjustment Trigger:** No price adjustment will be made on any project with less than 366 Calendar Days from the Contract Letting Date to the specified completion date. If the original Contract contains 366 Calendar Days or more, the Price Adjustment shall be made on quantities placed from the Contract Letting Date to the specified completion date.

C. **"Monthly Asphalt Cement Price":** The Department will publish a "Monthly Asphalt Cement Price" based on the formula contained within this specification.

D. **"Other Restrictions":**

1. No asphalt cement price adjustment will be made for cut-back, and emulsified asphalt when used for bituminous tack coat with Hot Mix Asphaltic Concrete Construction.

2. There is a cap of 60% above the FPL/APL for any price adjustment.

3. Unless specifically provided for by Supplemental Agreement or Contract Amendment, no positive Price Adjustments Asphalt Cement that result in a payment to the Contractor will be made after the original Contract Time has expired. Irrespective of any other provisions in the Contract, for purposes of this specification, "Contract Time" does not include any time extensions or Supplemental Agreements which affect the completion of the Contract. Negative Price Adjustments for Asphalt Cement for any work placed after the original Contract Time expires resulting in a return of funds to the Department will be made and shall be computed based on the Monthly Asphalt Cement Price at the time the Contract Time has expired or the Monthly Asphalt Cement Price at the time the Contract was let, whichever is less.

E. **Final Adjustment:** If there are differences between the final audited quantities and the sum of the quantities used to determine the asphalt cement adjustment, the Engineer will make a pro-rated increase or decrease in the price adjustment.

Payment for Price Adjustment will be made under:

Item No. 109	Price Adjustment- Asphalt Cement	$ (+/-)

Office of Construction Bidding Administration

February 01, 2017

DEPARTMENT OF TRANSPORTATION
STATE OF GEORGIA

SPECIAL PROVISION

Section 150—Traffic Control

150.1 General Description

This section, as supplemented by the Plans, Specifications, and Manual on Uniform Traffic Control Devices (MUTCD) shall be considered the Temporary Traffic Control (TTC) Plan in accordance with Work Zone Safety and Mobility Policy. Activities shall consist of furnishing, installing, maintaining, and removing necessary traffic signs, pedestrian signs, barricades, lights, signals, cones, pavement markings and other traffic control devices and shall include flagging and other means for guidance and protection of vehicular and pedestrian traffic through the Work Zone. This Work shall include both maintaining existing devices and installing additional devices as necessary in construction work zones.

The contractor shall be responsible for the maintenance of traffic signals and Advanced Traffic Management system (ATMs) devices from the time that the system is modified until final acceptance. The maintenance of traffic signals and ATMs devices that are not a part of the work and that are not in conflict with any portion of the work shall not be the responsibility of the contractor. However, the contractor is still responsible for damages to all devices that he or his subcontractors cause, in accordance with Section 107 and other specifications.

When any provisions of this Specification or the Plans do not meet the minimum requirements of the MUTCD, the MUTCD shall control. The 2009 Edition of the MUTCD shall be in effect for the duration of the project.

All traffic control devices used during the construction of the project shall meet the standards utilized in the MUTCD, and shall comply with the requirements of these Specifications, Georgia Construction Standards and Details, Project Plans, Design Manuals, and Special Provisions.

The needs and control of all road users (motorists, bicyclists and pedestrians within the highway right-of-way and easements, including persons with disabilities in accordance with the Americans with Disabilities Act of 1990 (ADA), Title II, Paragraph 35.130) through a Temporary Traffic Control (TTC) zone shall be an essential part of highway construction, utility work, maintenance operations and management of traffic incidents.

Utilities included in the contract are bounded by Special Provision 150 and shall follow its requirements. For utilities not included in the contract but working within the project limits, they shall, at a minimum follow the MUTCD. Moreover, in accordance with Utility Accommodation Policy and Standards Manual dated 2016, the Engineer reserves the right to require additional certified flaggers, signs, warning lights, channelization devices, and other safety devices as may be necessary to properly protect, warn, and safeguard the traveling public. In addition, the Department reserves the right to place time restrictions or moratoriums on all utility work covered under a permit when, in the opinion of the Department, the continuance of the Work would seriously hinder traffic flow, be needlessly disruptive, or would unnecessarily inconvenience the traveling public. In case of emergencies, Utilities shall be provided access in accordance with Utility Accommodation Policy and Standard Manual.

150.1.1 Definitions

For Special Provision 150, the definitions for "shall", " should", and "may" will be in accordance with MUTCD (1A.13).

Shall (Standard) - a statement of required, mandatory, or specifically prohibitive practice regarding a traffic control device.

Should (Guidance) - a statement of recommended, but not mandatory, practice in typical situations, with deviations allowed if engineering judgment or engineering study indicates the deviation to be appropriate.

May (Option) — a statement of practice that is a permissive condition and carries no requirement or recommendation.

150.1.2 Content

150.1 General Description

150.1.1 Definitions

150.1.2 Content

150.1.3 Related References

A. Standard Specification
B. Reference Documents

150.1.4 Submittals/Preconstruction

A. Worksite Traffic Control Supervisor
B. Sequence of Operations
C. Pedestrian Considerations

1. Pedestrian Signage
2. Temporary Pedestrian Facilities

150.2 Materials and Traffic Control Devices

150.2.1 Traffic Control Devices

A. NCHRP 350 and MASH
B. Approval
C. Quality Guidelines for All Temporary Traffic Devices

150.2.2 Reflectorization Requirements

A. Signs

1. For All Projects Let Prior to and Including April/May 2018
1. For All Projects Let Prior to and Including April/May 2018

B. Channelization Devices

1. For All Projects Let Prior to and Including April/May 2018
2. For All Projects Let Prior to and Including April/May 2018

150.2.3 Arrow Panels

150.2.4 Channelization Devices

A. General
B. Drums

1. Design
2. Application
3. Longitudinal Channelization
4. Removal

C. Vertical Panels

1. Design
2. Application

D. Cones

1. Design
2. Applications

E. Barricades

1. Design
2. Application

F. Warning Lights

1. Design
2. Application

150.2.5 Flashing Beacon

150.2.6 Guardrail

150.2.7 Interim Signs

A. Posts
B. Sign Blanks and Panels

150.2.8 Pavement Markings

A. All Traffic Striping for Forty-Five (45) Days or Less (≤45 Days)
B. All Temporary Striping Beyond Forty-Five (45) days (>45 Days)
C. All Temporary Traffic Striping on Final Surface

150.2.9 Portable Changeable Message Signs

150.2.10 Portable Impact Attenuators

150.2.11 Portable Temporary Traffic Control Signals

150.2.12 Raised Pavement Markers

150.2.13 Rumble Strips

150.2.14 Temporary Barriers

A. Design
B. Application

150.2.15 Temporary Guardrail Anchorage- Type 12

150.2.16 Temporary Traffic Signal

150.3 Construction Requirements

150.3.1 General

A. Implementation Requirements
B. Maintenance of Traffic Control Devices
C. Traffic Interruption Restrictions
D. Work Zone Restrictions

1. Interstate
2. Non-Interstate Divided Highways
3. Non-Divided Highways

E. Work Zone Geometric Restrictions
F. Clear Zone
G. Milled Surface Restrictions
H. Construction Vehicle
I. Environmental Impacts
J. Existing Street Lights
K. Nighttime Work Lighting
L. Removal/Reinstallation of Miscellaneous Items

150.3.2 Personnel – Worker Safety Apparel

150.3.3 Signage – General

A. Signing Requirements of the Temporary Traffic Control (TTC) Plan
B. Conflicting or Non-Applicable Signs
C. Removal of Existing Signs and Supports
D. Interim Guide, Warning and Regulatory Signs
E. Existing Special Guide Signs

1. Special Guide Signs
2. Interim Special Guide Signs
3. Interim Overhead Guide Sign Structures
4. Permanent Special Guide Signs

F. Stop Sign Regulated Intersections

G. Low Shoulder Signage

1. Low Shoulder for Construction/Reconstruction/Resurfacing Projects
2. Shoulder Drop-Off for Construction/Reconstruction/Resurfacing Project

H. Bump Signage
I. Sign Visibility

150.3.4 Advance Warning Signs

A. Project Signs - All Type of Highways

1. State Routes
2. Interstate, Limited Access and Multilane Divided Highways
3. Ramp Work on Limited Access Highways

B. Highway Work Zone

1. No Reduction in the Existing Posted Speed Limit in Highway Work Zone
2. Reducing the Speed Limit in a Highway Work Zone
3. Variable Speed Limit Zones

C. Installation/Removal of Work Area Signage

150.3.5 Shoulder/Lane Closure

A. Approval/Restrictions

1. Closure Length
2. Duration

B. Shoulder Closure
C. Lane Closure

1. Advance Warning Signs
2. Transition Area – Taper
3. Activity Area
4. Termination Area

D. Removal of Lane Closures
E. Exit and Entrance Ramps

150.3.6 Traffic Pacing Method

A. Pacing Of Traffic
B. Methods of Signing For Traffic Pacing

150.3.7 Flagging Operation

A. Flaggers
B. Flagger Certification
C. Flagger Appearance and Equipment
D. Flagger Warning Signs
E. Pilot Vehicle Requirements
F. Automated Flagger Assistance Devices
G. Portable Temporary Traffic Control Signals

150.3.8 Traffic Signals

A. Responsibility/Cost
B. Law Enforcement Officer Requirement

150.3.9 Mobile Operations

150.3.10 Pavement Markings

A. General

1. Resurfacing Projects
2. Widening and Reconstruction Projects
3. New Location Construction Projects

B. Installation and Removal of Pavement Markings

1. Installation
2. Removal
3. Intermediate Surface
4. Final Surface
5. Pay Factor Reduction for Asphaltic Concrete Final Surfaces
6. Preparation and Planning for Traffic Shifts

C. Raised Pavement Markers

1. Supplementing Lane Lines
2. Supplementing Ramp Gore Lines
3. Other Lines

D. Exceptions for Interim Markings

1. Two-Lane, Two-Way Roadway
2. Multi-Lane Highway – with No Paved Shoulder(s) or Paved Shoulder(s) Four Feet or Less (≤ 4')
3. Limited Access Roadways and Roadways with Paved Shoulder Greater than Four Feet (>4')
4. Ramps for Multi-land Divided Highways
5. Miscellaneous Pavement Markings

150.3.11 Differences in Elevation between Travel Lanes and Shoulders

A. Differences in Elevations

1. Difference of Two Inches (≤ 2") or Less Between Adjacent Travel Lanes
2. Difference of Two Inches (≤ 2") or Less Between Adjacent Travel Lane and Paved Shoulder Should
3. Difference of Greater Than Two Inches (>2") is Permitted for Continuous Operations
4. Difference of Greater Than Two Inches (>2") Between Travel Lanes and/or Shoulders for Non-Continuous Operations

B. Healed Section
C. Emergency Situations
D. Plating
E. Asphaltic Concrete Resurfacing Projects

1. Shoulder Construction Included as a Part of the Contract
2 Shoulder Construction Not Included as a Part of the Contract

150.3.12 Work Zone Law Enforcement

150.4 Measurement

150.4.1 Traffic Control Items

A. Traffic Control
B. Changeable Message Sign, Portable
C. Flashing Beacon Assembly
D. Pavement Markings
E. Portable Impact Attenuators
F. Signs

1. Interim Ground Mounted or Interim Overhead Special Guide Signs
2. Remove And Reset Existing Special Guide Signs, Ground Mount or Overhead
3. Modify Special Guide Signs, Ground Mount or Overhead

G. Temporary Audible Information Device
H. Temporary Barrier
I. Temporary Curb Cut Wheelchair Ramps
J. Temporary Guardrail Anchorage, Type 12
K. Temporary Walkways with Detectable Edging
L. Traffic Signal Installation - Temporary
M. Work Zone Law Enforcement

150.5 Payment

150.5.1 Enforcement and Adjustments

150.1.3 Related References

A. Standard Specifications

Section 104-Scope of Work

Section 105-Legal Regulations and Responsibility to the Public

Section 107-Legal Regulations and Responsibly to the Public

Section 108-Prosecution and Progress

Section 209-Subgrade Construction

Section 400-Hot Mix Asphaltic Concrete Construction

Section 441-Miscellaneous Concrete

Section 429-Rumble Strips

Section 620-Temporary Barrier

Section 632-Portable Changeable Message Signs

Section 641-Guardrail

Section 647-Traffic Signal Installation

Section 648-Traffic Impact Attenuator

Section 652-Painting Traffic Stripe

Section 653 – Thermoplastic Traffic Stripe

Section 654-Raised Pavement Markers

Section 656-Removal of Pavement Markings

Section 657 – Preformed Plastic Pavement Markings

Section 658 – Standard and Wet Weather Polyurea Traffic Stripe

Section 659 Hot Applied Preformed Plastic Pavement Markings

Section 911-Sign Posts

Section 912-Sign Blanks and Panels

Section 913 - Reflectorizing Materials

B. Referenced Documents

ASTM D4956-13 (Retro-reflectivity)

American Traffic Safety Services Association (ATSSA)

Construction Detail A-3 Curb Cut (Wheelchair) Ramps Concrete Sidewalk Details

Construction Detail A-4 Detectable Warning Surface Truncated Dome Size, Spacing and Alignment Requirements

Construction Detail T-3A (Type 7, 8, and 9 Square Tube Post Installation Detail)

GDOT Signing and Marking Design Guidelines

Georgia Standard 4000W "Lengths of Advancement, Clear Zone Distances, Fill Height Embankment"

Georgia Standard 4960 "Temporary Barrier (End Treatment Options)"

Georgia Standard 9102 "Traffic Control Detail for Lane Closure on Two-Lane Highway"

Georgia Standard 9106 "Traffic Control Detail for Lane Closure on Multi-Lane Divided Highway"

Georgia Standard 9107 "Traffic Control Detail for Lane Closure on Multi-Lane Undivided Highway"

Georgia Standard 9121 "Tapers, Signs, and Markings for Passing Lanes"

Manual for Assessing Safety Hardware (MASH)

Manual on Uniform Traffic Control Devices (MUTCD)

National Cooperative Highway Research Program (NCHRP) 350

National Safety Council

Quality Product List #29 (QPL-29) Reflective Sheeting

Quality Product List #34 (QPL-34) Work Zone Traffic Control Devices (Drums, Type III Barricades, Vertical Panels, and Portable Sign Systems)

Quality Product List #35 (QPL-35) Drive Type Galvanized Steel Sign Posts

Quality Product List #46 (QPL-46) Traffic Pavement Markings

Quality Product List #64 (QPL-64) Attenuator Units (Compression Crash Cushion) and Guardrail End Treatments

Quality Product List #76 (QPL-76) Raised Pavement Markers and Channel Markers

Quality Product List #79 (QPL -79) Portable Arrow Boards

Quality Product List #82 (QPL -82) "Portable Changeable Message Signs"

Utility Accommodation Policy and Standards Manual

Work Zone Safety and Mobility Policy

150.1.4 Submittals/Preconstruction

A. Worksite Traffic Control Supervisor

The Contractor shall designate a qualified individual as the Worksite Traffic Control Supervisor (WTCS). The WTCS shall be responsible for selecting, installing and maintaining all traffic control devices in accordance with the Plans, Specifications, Special Provisions and the MUTCD. The WTCS shall be currently certified by the American Traffic Safety Services Association (ATSSA) Work Site Traffic Supervisor Certification program or the National Safety Council Certification program. On-line classes will not be accepted.

The WTCS shall be available on a twenty-four (24) hour basis to perform his duties. If the work requires traffic control activities to be performed during the daylight and nighttime hours, it may be necessary for the Contractor to designate an alternate WTCS. An alternate WTCS must meet the same requirements and qualifications as the primary WTCS and be accepted by the Engineer prior to beginning any traffic control duties. The Worksite Traffic Control Supervisor's traffic control responsibilities shall have priority over all other assigned duties.

As the representative of the Contractor, the WTCS shall have full authority to act on behalf of the Contractor in administering the TTC Plan. The WTCS shall have appropriate training in safe traffic control practices in accordance with Part 6 of the MUTCD. In addition to the WTCS, all other individuals making decisions regarding traffic control shall meet the training requirements of the Part 6 of the MUTCD.

The Worksite Traffic Control Supervisor (WTCS) shall have a copy of Part 6 of the MUTCD and the Contract on the job site. Copies of the current MUTCD may be obtained from the FHWA web page at http://mutcd.fhwa.dot.gov.

The WTCS shall supervise the initial installation of traffic control devices. The Engineer, prior to the beginning of construction, will review the initial installation. Modifications to traffic control devices as required by sequence of operations or staged construction shall be reviewed by the WTCS.

Any work performed on the interstate or limited access highway right-of-way that requires traffic control shall be supervised by a submitted/approved certified Worksite Traffic Control Supervisor. No work requiring traffic control shall be performed unless the certified WTCS is on the worksite. Failure to maintain a Certified Worksite Traffic Control Supervisor on the work will be considered as non-performance under Subsection 150.5.01.

The WTCS or alternate WTCS shall be available on a full-time basis to maintain traffic control devices with access to all personnel, materials, and equipment necessary to respond effectively to an emergency situation within forty-five (45) minutes of notification of the emergency.

The WTCS shall perform inspections, at a minimum once a month, to ensure that traffic control is maintained. For all interstate and limited access highways, the WTCS shall perform, as a minimum, weekly traffic control inspections. The inspections will start with the installation of the advance warning signs and will stop when a maintenance acceptance is issued or when the punch list is completed.

An inspection shall include both daytime and nighttime reviews. The inspection shall be reported to the Engineer on a Traffic Control Inspection Report, (TC-1). Unless modified by the special conditions or by the Engineer, routine deficiencies shall be corrected within a twenty-four (24) hour period. Failure to comply with these provisions shall be grounds for dismissal from the duties of WTCS and/or removal of the WTCS from the project. Failure of the WTCS to execute his duties shall be considered as non-performance under Subsection 150.5.01.

TRAFFIC CONTROL INSPECTION REPORT (TC-1)

Project No.: County: _____

Contractor: Date: Daytime: _____

Nighttime: _____

PURPOSE: To provide adequate warning, delineation, and channelization to assist in guiding road users in advance of and through the work zone by utilizing proper pavement markings, signs, and other MUTCD compliant devices.

RESPONSIBILITY: The Worksite Traffic Control Supervisor (WTCS) has the duty of ensuring that all traffic control devices are installed and maintained according to the requirements of the Traffic Control Plan.

DEFICIENCIES: Items noted below required corrective measures be performed with the next

____ hours/days.

LOCATION	DESCRIPTION	ACTION REQUIRED

(use additional sheets if needed)

Signature:_____ WTCS or DOT performing inspection

DOT inspection presented to WTCS Date:_____Time: _____

TO BE COMPLETED BY THE WTCS

The attached deficiencies were corrected by Date:_____ Time:_____

Signature_____ Return TC-1 to DOT inspector.

The WTCS certifies that all traffic control devices in use on the project are MASH/NCHRP 350 crashworthy compliant.

Page 1 of 2 (TC-1)

Traffic Control Checklist

	Satisfactory	Unsatisfactory	Non-applicable
Signs	S	U	N
☐ Are the signs correctly installed?			
☐ Signs are in place according to TTC plans. Signs are plumb and level. Signs are at the proper height.			
☐ Are the signs visible and readable to the public both daytime and nighttime?			
☐ Is retroreflectivity good?			
☐ Are signs not in use including PCMS properly stored?			
TTC Devices	S	U	N
☐ Are they MASH/NHCRP 350 approved? Do they meet MUTCD and Special Provision 150 requirements?			
☐ Are they installed according to manufacture recommendation?			
☐ Are they in acceptable/marginal condition? Are they stable? Is the retroreflectivity good?			
Clear Zone	S	U	N
☐ Are all material and equipment stored beyond the clear zone?			
☐ If stored in clear zone, are they protected by positive barrier?			
☐ Are drop-off marked and healed according to Special Provision 150?			
Positive Barriers	S	U	N
☐ Are the barriers in acceptable/marginal condition and FHWA approved?			
☐ Are the barrier reflectors proper and in good condition?			
☐ Do the barriers extend to the proper advancement length? Are the tapers according to GA Standards?			
Attenuators and Guardrails	S	U	N
☐ Are the proper attenuators assemblies in use?			
☐ Gating Is the recovery area free of debris and provide the necessary recovery area?			
☐ Is the assembly in accordance with manufacture recommendation?			
☐ Are the guardrails properly anchor and/or attached to the barrier?			
☐ Are shoes and transition sections in accordance with Standards?			
Pavement Markings	S	U	N
☐ Are the pavement making visible and legible?			
☐ Can they be seen during the daytime and nighttime?			
☐ Are there no conflicting pavement markings?			
☐ Are the pavement markings including RPM installed and maintained according to section 150?			

Page 2 of 2 (TC-1)

The Engineer will periodically review the work for compliance with the requirements of the TTC plan.

On projects where traffic control duties will not require full time WCTS supervision, the Engineer may allow the Contractor's Project superintendent, foreman, subcontractor, or other designated personnel to serve as the WTCS as long as satisfactory results are obtained. Nevertheless, the individual shall meet the requirements and perform the duties of a WTCS.

B. Sequence of Operations

Any Sequence of Operations provided in this Contract in conjunction with any staging details which may be shown in the plans, is a suggested sequence for performing the Work. It is intended as a general staging plan for the orderly execution of the work while minimizing the impact on pedestrian facilities, mainline, cross-streets and side streets. The Contractor shall develop detailed staging and temporary traffic control plans for performing specific areas of the Work including but not limited to all traffic shifts, detours, bridge widenings, paces, or other activities that disrupt traffic or pedestrian flow. The Engineer may require detailed staging and TTC plans for lane closures or disruption to pedestrian facilities. These plans shall be submitted for approval at least two (2) weeks prior to the scheduled date of the activity. Activities that have not been approved at least seven (7) days prior to the scheduled date shall be rescheduled.

Where traffic is permitted through the work area under stage construction, the Contractor may choose to construct, at no additional expense to the Department, temporary on-site bypasses or detours in order to expedite the work. Plans for such temporary bypasses or detours shall be submitted to the Engineer for review and approval thirty (30) calendar days prior to the proposed construction. Such bypasses or detours shall be removed promptly when in the opinion of the Engineer; they are no longer necessary for the satisfactory progress of the Work. Bypasses and detours shall meet the minimum requirements of Subsection 150.3.01.D.

As an option to the Sequence of Operations in the Contract, the Contractor may submit an alternative Sequence of Operations for review and approval. Alternate Sequence of Operations for pedestrian facilities shall be in compliance with the MUTCD and ADA. Pedestrian needs identified in the preconstruction phase shall be included in the proposed alternate plan.

The Department will not pay, or in any way, reimburse the Contractor for claims arising from the Contractor's inability to perform the Work in accordance with the Sequence of Operations provided in the Contract or from an approved Contractor alternate.

The Contractor shall secure the Engineer's approval of the Contractor's proposed plan of operation, sequence of work and methods of providing for the safe passage of vehicular and pedestrian traffic before it is placed in operation. The proposed plan of operation shall supplement the approved traffic control plan. Any major changes to the approved TTC plan, proposed by the Contractor, shall be submitted to the Department for approval.

Some additional traffic control details will be required prior to any major shifts or changes in traffic. The traffic control details shall include, but not be limited to, the following:

1. A detailed drawing showing traffic locations and lanes for each step of the change.

2. The location, size, and message of all signs required by the MUTCD, Plan, Special Provisions, and other signs as required to fit conditions. Any portable changeable message signs used shall be included in the details.

3. The method to be used in, and the limits of, the obliteration of conflicting lines and markings.

4. Type, location, and extent of new lines and markings.

5. Horizontal and vertical alignment and superelevation rates for detours, including cross-section and profile grades along each edge of existing pavement.

6. Drainage details for temporary and permanent alignments.

7. Location, length, and/or spacing of channelization and protective devices (temporary barrier, guardrail, barricades, etc.)

8. Starting time, duration and date of planned change.

9. For each traffic shift, a paving plan, erection plan, or work site plan, as appropriate, detailing workforce, materials, and equipment necessary to accomplish the proposed work. This will be the minimum resource allocation required in order to start the work.

A minimum of three (3) copies of the above details shall be submitted to the Engineer for approval at least fourteen (14) days prior to the anticipated traffic shift. The Contractor shall have traffic control details for a traffic shift which has been approved by the Engineer prior to commencement of the physical shift. All preparatory work relative to the traffic shift, which does not interfere with traffic, shall be accomplished prior to the designated starting time. The Engineer and the Contractor's representative will verify that all conditions have been met prior to the Contractor obtaining materials for the actual trafficshift.

C. Pedestrian Considerations

All existing pedestrian facilities, including access to transit stops, shall be maintained. Where pedestrian routes are closed, alternate routes shall be provided. Closures of existing, interim and final pedestrian facilities shall have the prior written approval of the Engineer. When existing pedestrian facilities are disrupted, closed or relocated in a TTC zone, the temporary facilities shall be detectable and shall include accessibility features consistent with the features present in the existing pedestrian facility. Pedestrian facilities are considered improvements and provisions made to accommodate or encourage walking. Whenever a sidewalk is to be closed, the Engineer shall notify the maintaining agency two (2) weeks prior to the closure. Prior to closure, detectable barriers (that are detectable by a person with a visual disability traveling with the aid of a long cane), as described by the MUTCD, shall be placed across the full width of the closed sidewalk. Barriers and channelizing devices used along a temporary pedestrian route shall be in compliance with the MUTCD.

Temporary Traffic Control devices used to delineate a Temporary Traffic Control Zone Pedestrian Walkway shall be in compliance with Subsection 150.3.01.A. Appropriate signs as described in the MUTCD shall be maintained to allow safe passage of pedestrian traffic or to advise pedestrians of walkway closures (Refer to MUTCD Figures TA-28 and TA-29 for guidance). Advance closure signing should be placed at intersections rather than midblock locations so that pedestrians are not confronted with midblock work sites that will induce them to attempt skirting the work site or making a midblock crossing. Temporary Traffic Control devices and construction material shall not intrude into the usable width of the pedestrian walkway. Signs and other devices shall be placed such that they do not narrow or restrict any pedestrian passage to less than forty-eight inches (≥ 48").

1. Pedestrian Signage

A pedestrian walkway shall not be severed or relocated for non-construction activities, such as parking for construction vehicles and equipment. Movement by construction vehicles and equipment across designated pedestrian walkways should be minimized. When necessary, construction activities shall be controlled by flaggers. Pedestrian walkways shall be kept free of mud, loose gravel or other debris.

When temporary covered walkways are used, they shall be lighted during nighttime hours. When temporary traffic barrier is used to separate pedestrian and vehicular traffic, the temporary barrier shall meet NCHRP-350 Test Level Three. The barrier ends shall be protected in accordance with Georgia

Standard 4960. Curbing shall not be used as a substitute for temporary traffic barriers when temporary traffic barriers are required. Tape, rope or plastic chain strung between temporary traffic control devices are not considered as detectable and shall not be used as a control for pedestrian movements.

The WTCS shall inspect the activity area daily to ensure that effective pedestrian TTC is being maintained. The inspection of TTC for pedestrian traffic shall be included as part of the TC-1 report.

2. Temporary Pedestrian Facilities

Temporary pedestrian facilities shall be detectable and include accessibility features consistent with the features present in the existing pedestrian facility. The geometry, alignment and construction of the facility should meet the applicable requirements of the "Americans with Disabilities Act Accessibility Guidelines for Buildings and Facilities (ADAAG)".

a. Temporary Walkways with Detectable Edging

A smooth, continuous hard surface (firm, stable and slip resistant) shall be provided throughout the entire length of the temporary pedestrian facility. Compacted soils, sand, crushed stone or asphaltic pavement millings shall not be used as a surface course for walkways.

Temporary walkways shall include detectable edging as defined in the MUTCD. When temporary traffic barrier is included as a pay item in the contract and where locations identified on the plans for positive protection will also allow them to serve as pedestrian detectable edging, payment will be made for the temporary traffic barrier in accordance with Section 620. No payment will be made for temporary walkways with Detectable Edging where existing pavements or existing edging (that meets the requirements of MUTCD) are utilized as temporary walkways. Payment for temporary detectable edging, including approved barriers and channelizing devices, installed on existing pavements shall be included in Traffic Control-Lump Sum.

Regardless of the materials used, temporary walkways shall be constructed with sufficient thickness and durability to withstand the intended use for the duration of the construction project. If concrete or asphalt is used as the surface course for the walkway, it shall be a minimum of one and one-half inches (≥ 1-1/2") thick. Temporary walkways constructed across unimproved streets and drives shall be a minimum thickness of four inches (≥ 4") for concrete and three inches (≥ 3") for asphalt. Joints formed in concrete sidewalks shall be in accordance with Section 441 Concrete surfaces shall have a broom finish.

If plywood is used as a walkway, it must be a minimum of three quarters of an inch (≥ 3/4") thick, pressure treated and supported with pressure treated longitudinal joists spaced a maximum of sixteen inches (≤ 16") on center. The plywood shall be secured to the joist with galvanized nails or galvanized deck screws. Nails and screws shall be countersunk to prevent snagging or tripping the pedestrians. A slip resistant friction course shall be applied to any plywood surface that is used as a walkway. Any slip resistant material used shall have the prior written approval of the engineer.

The contractor may propose alternate types of Temporary Walkways provided that the contractor can document that the proposed walkway meets the requirements of the "Americans with Disabilities Act Accessibility Guidelines for Buildings and Facilities (ADAAG)". Alternate types of Temporary Walkways shall have the prior written approval of the engineer.

Temporary walkways shall be constructed and maintained so there are no abrupt changes in grade or terrain that could cause a tripping hazard or could be a barrier to wheelchair use. The contractor shall construct and maintain the walkway to ensure that joints in the walkway have a vertical difference in elevation of no more than one quarter (≤ 1/4") of an inch and that the horizontal joints have gaps no greater than one half (≤ 1/2") of an inch. The grade of the temporary walkway should parallel the grade of the existing walkway or roadway and the cross slope should be no greater than two percent (≤ 2%).

A width of sixty inches (60"), if practical, should be provided throughout the entire length of any temporary walkway. The temporary walkway shall be a minimum width of forty eight inches (48"). When it is not possible to maintain a minimum width of sixty inches (60") throughout the entire length of temporary walkway, a sixty inch (60") by sixty inch (60") passing space should be provided at least every two hundred feet (200 ft.), to allow individuals in wheelchairs to pass.

Temporary walkways shall be constructed on firm subgrade. Compact the subgrade according to Section 209. Furnish and install any needed temporary pipes prior to constructing any walkway to ensure positive drainage away from or beneath the temporary walkway. Once the walkway is no longer required, remove any temporary materials and restore the area to the original conditions or as shown in the plans.

b. Temporary Curb Cut Wheelchair Ramps

Temporary curb cut wheelchair ramps shall be constructed in accordance with Section 441 and Construction Detail A-3 Curb Cut (Wheelchair) Ramps Concrete Sidewalk Details. Ramps shall also include a detectable warning surface in accordance with Construction Detail A-4 Detectable Warning Surface Truncated Dome Size, Spacing and Alignment Requirements. Other types of material for the construction of the temporary curb cut wheelchair ramps, including the detectable warning surface, may be used provided the contractor can provide documentation that the material to be used meets the requirements of the "Americans with Disabilities Act Accessibility Guidelines for Buildings and Facilities (ADAAG)". When a wheelchair ramp is no longer required, remove the temporary materials and restore the area to existing conditions or as shown in the plans. For the items required to restore the area to original conditions or as shown in the plans, measures for payment shall be covered by contract pay items. If pay items are not included in the contract, then payment for these items shall be included in Traffic Control-Lump Sum.

c. Temporary Audible Information Device

Temporary audible information devices, when shown in the plans, shall be installed in compliance with the "Americans with Disabilities Act Accessibility Guidelines for Buildings and Facilities (ADAAG)". The devices shall be installed in accordance with the manufacturer's recommendations. Prior to installation, the contractor shall provide the engineer with a set of manufacturer's drawings detailing the proper installation procedures for each device. When no longer required, the devices shall remain the property of the contractor.

150.2 Materials and Traffic Control Devices

150.2.1 Traffic Control Devices

A. NCHRP 350 and MASH

All devices shall be certified in accordance with the Manual for Assessing Safety Hardware (MASH) Test Level 3 and/or the National Cooperative Highway Research Program (NCHRP) 350 Test Level 3 as applicable unless modified by this Special Provision. In addition, temporary work zone devices, including portable barriers, manufactured after December 31, 2019, must have been successfully tested under 2016 edition of MASH requirements. Such devices manufactured on or before this date, and successfully tested under either NCHRP Report 350 or the 2009 edition of MASH, may continue to be used throughout their normal service lives.

B. Approval

All traffic control devices with applicable Qualified Products List (QPL) categories shall come from the appropriate QPL list. Products not on the QPL may be used with an approval letter from the Georgia Department of Transportation Office of Materials and Testing. If there are no applicable QPL, the Contractor shall provide proof of MASH/NCHRP 350 certification. The proof may be a letter or written statement from the manufacturer that the product is MASH/NCHRP 350 approved. Decal certifications are not proof of certification and are not required.

C. Quality Guidelines for All Temporary Traffic Devices

All traffic control devices found to be unacceptable in accordance with the current ATSSA, "Quality Guidelines for Temporary Traffic Devices and Features" regardless of total numbers shall be replaced within twenty-four (24) hours unless stated otherwise in the specifications, in the contract, or as directed by the Engineer.

150.2.2 Retroreflectivity Requirements

A. Signs

Reflective sheeting should meet the requirements of Section 913 and QPL-29

1. For all projects let prior to and including April/May 2018, signs can be:

   a. All rigid fluorescent orange construction warning signs (black on fluorescent orange) shall meet the minimum retroreflectivity and color requirements of ASTM Type VII, VIII, IX or X regardless of the mounting height.

   b. Warning signs (W3-1) for stop conditions that have rumble strips located in the travel lane shall be reflectorized with ASTM Type IX fluorescent yellow sheeting.

   c. All other signs shall meet the requirements of ASTM Type III or IV except for "Pass With Care" and "Do Not Pass" signs which may be ASTM Type I unless otherwise specified

2. For all projects let May/June 2018 and afterward, all construction warning signs (black on fluorescent orange) shall meet the minimum reflectivity and color requirements of ASTM D4956 Type XI regardless of the mounting height. All other signs reflectorization shall be in accordance with the plans, contract, and "GDOT Signing and Marking Design Guidelines".

B. Channelization Devices

Reflective sheeting should meet the requirements of Section 913 and QPL-29

1. For all projects let prior to and including April/May 2018, channelization devices shall meet the minimum requirements of ASTM Type III or IV high intensity sheeting.

2. For all projects let May/June 2018 and afterward, all channelization devices (white/ fluorescent orange and white/red) shall meet the minimum retroreflectivity requirements of ASTM D4956 Type VI.

150.2.3 Arrow Panels

Arrow panel should meet the requirements for MUTCD (6F.61) and QPL-79.

Portable sequential arrow, sequential chevron, or flashing arrow panels shall be a minimum size of forty-eight inches (48") high by ninety-six inches (96") wide with not less than fifteen (15) lamps used for the arrow. The arrow shall occupy virtually the entire size of the arrow panel and shall have a minimum legibility distance of one (1) mile. The minimum legibility distance is the distance at which the arrow panel can be comprehended by an observer on a sunny day, or clear night. Arrow panels shall be equipped with automatic dimming features for use during hours of darkness. The arrow panels shall also meet the requirements for a Type C panel as shown in the MUTCD (6F.61). The sequential or flashing arrow panels shall not be used for lane closure on two-lane, two-way highways when traffic is restricted to one-lane operations in which case, appropriate signing, flaggers and when required, pilot vehicles will be deemed sufficient.

The arrow panels shall be placed on the shoulder at or near the point where the lane closing transition begins. The panels shall be mounted on a vehicle, trailer, or other suitable support. Vehicle mounted panels shall be provided with remote controls. Minimum mounting height shall be seven feet (7') above the roadway to the bottom of the panel, except on vehicle mounted panels which should be as high as practical.

For emergency situations, arrow display panels that meet the MUTCD requirements for Type A or Type B panels may be used until Type C panels can be located and placed at the site. The use of Type A and Type B panels shall be held to the minimum length of time possible before having the Type C panel(s) in operation. The Engineer shall determine when conditions and circumstances are considered to be emergencies. The Contractor shall notify the Engineer, in writing, when any non-specification arrow display panel(s) is being used in the work.

150.2.4 Channelization Devices

A. General

Channelization shall clearly delineate the travel way through the work zone and alert drivers and pedestrians to conditions created by work activities in or near the travel way. Channelization shall be accordance with the plans, specifications, MUTCD, QPL-34, and the following requirements.

B. Drums

1. Design

Drums shall meet the minimum requirement of the MUTCD (6F.67). For all projects let May/June 2018 and afterward, drums shall have six inch (6") wide stripes – white/fluorescent orange.

2. Application

Drums shall be used as the required channelizing device to delineate the full length of a lane closure, shift, or encroachment, except as modified by this Subsection.

3. Longitudinal Channelization

Drums shall be spaced as listed below for various roadside work conditions except as modified by Subsection 150.3.11. Spacing shall be used for situations meeting any of the conditions listed as follows:

a. FORTY FOOT (40') SPACING MAXIMUM

- For difference in elevation exceeding two inches (> 2").
- For healed sections no steeper than 4:1 as shown in Subsection 150.3.11, Detail 150-H..

b. EIGHTY FOOT (80') SPACING MAXIMUM

- For difference in elevation of two inches (≤ 2") or less.
- Flush areas where equipment or workers are within ten feet (≤ 10') of the travel lane.

c. 200 FOOT SPACING MAXIMUM: Where equipment or workers are more than ten feet (> 10') from travel lane. Lateral offset clearance to be four feet (4') from the travel lane.

- For paved areas, eight feet (> 8') or greater in width that are paved flush with a standard width travel lane.
- For disturbed shoulder areas not completed to typical section that are flush to the travel lane and considered a usable shoulder.

4. Removal of Drums

Drums may be removed after shoulders are completed to typical section and grassed. Guardrail and other safety devices shall be installed and appropriate signs advising of conditions such as soft or low shoulder shall be posted before the drums are removed.

C. Vertical Panels

1. Design

All vertical panels shall meet the minimum requirements of the MUTCD (6F.66). All vertical panels shall have a minimum of 270 square inches of retroreflective area facing the traffic and be a minimum thirty-six inches (≥ 36") high. For all projects let May/June 2018 and afterward, the vertical panel shall be in addition a minimum eight inches (≥ 8") wide with a stripe width of six inches (6") – white/fluorescent orange.

2. Application

Vertical panels with retroreflectivity less than type VI can only be used when traffic drums reduce the travel lane to less than ten feet (≤ 10'); vertical panels shall be used to restore the travel lane to ten feet (≥ 10') or greater. No other application of vertical panels with retroreflectivity less than type VI will be permitted.

Vertical panels with a minimum type VI retroreflectivity and six inch (6") stripe may be used for longitudinal channelization in the activity zone where work takes place for short-term stationary lane closures and intermediate-term stationary lane closures. They can be used for lane closures lasting three (3) days and with Engineer approval up to seven (7) days. They shall not be used in the transition zone including the tapers and the tangent lengths between tapers.

D. Cones

1. Design:

   All cones shall be a minimum of twenty-eight inches (≥ 28") in height regardless of application and shall meet the requirements of the MUTCD (6F.64).

   Retroreflectivity may be be deleted from all cones.

2. Application

   On interstate cones shall be prohibited. On all other routes cones may only be used for longitudinal channelization in the activity zone where work takes place for short-term stationary lane closures. They shall not be used in the transition zone including the tapers and the tangent lengths between tapers. The use of cones for nighttime work will not be permitted. Cones shall not be stored or allowed to be visible on the worksite during nighttime.

   Cones may be used for daytime flagging operations including tapers at flagging stations.

E. Barricades

1. Design

   Type 3 barricades shall meet the minimum requirements of the MUTCD (6F.68). The Contractor has the option of choosing Type 3 barricades from the QPL-34 or the Contractor may utilize generic barricades that are approved by the Federal Highway Administration (FHWA). When barricades have been specifically crash tested with signs attached, the contractor has the responsibility to attach the signs as per the manufacturer's recommendations to ensure crashworthiness. If the barricades were not tested with the signs, crashworthy compliance may require that rigid signs be mounted separate from the Type 3 barricade.

   The use of Type 1 and Type 2 barricades will not be permitted.

2. Application

   Type 3 barricades shall be placed as required by the plans, the Standards, and as directed by the Engineer.

   When a barricade is placed so that it is subject to side impact from a vehicle, a drum shall be placed at the side of the barricade to add target value to the barricade.

F. Warning Lights

1. Design

   All warning lights shall meet the requirements of the MUTCD (6F.83).

2. Application:

   a. Type A low-intensity flashing lights shall be used as shown in the Plans, the Standards, and as directed by the Engineer.

   b. Type C Steady-Burn lights shall be used as shown in the Plans, the Standards, and as directed by the Engineer.

150.2.5 Flashing Beacon

The flashing beacon assembly, when specified, shall be used in conjunction with construction warning signs, regulatory, or guide signs to inform traffic of special road conditions which require additional driver attention. The flashing beacon assembly shall be installed in accordance with the requirements of Section 647.

150.2.6 Guardrail

Guardrail shall comply with Section 641 Guardrail and the guardrail standards.

When the removal and installation of guardrail is required, as a part of the work, the following time restrictions shall apply unless modified by the special conditions:

From the time that the existing guardrail or temporary positive barrier protection is removed, the Contractor has fourteen (14) days to install the new guardrail and anchors. During the interim, the location without guardrail shall be protected with drums spaced at a maximum spacing of twenty feet (20'). The guardrail blunt end is to be treated as a fix object and shall be projected. The maximum length of rail that can be removed at any time without being replaced with positive barrier protection is a total of 2000 linear feet of existing rail or the total length of one run of existing rail, whichever is less. Based on existing field conditions, the Engineer may review the work and require that the guardrail be installed earlier than the maximum time allowed.

The contractor shall install new guardrail, such that traffic exposure to fixed objects is minimized. Within the same workday, temporary attenuators, as defined in Subsection 150.2.10, should be installed on the approach to fixed objects that can't be protected with guardrail. Truck mounted attenuators may be used to shield exposed fixed objects for periods not to exceed fourteen (14) days. No separate payment will be made for truck mounted attenuators, attenuators, or other methods unless provided for in the contract.

When the roadway is open to traffic, guardrail panels shall be lapped to comply with the directional flow of traffic. Should the staging of the work require that the lap of the guardrail be changed, this work shall be completed before the roadway is opened to traffic. The work to change the lap of any guardrail shall be included in Traffic Control-Lump Sum.

The laps on anchors shall be in accordance with the manufacture's recommendations and installation instructions. As a result, a trailing anchor may be lapped opposing the flow of traffic.

Failure to comply with the above time and quantity restrictions shall be considered as non-compliance under Subsection 150.5.01.

150.2.7 Interim Signs

A. Posts

Permanent mounting height to the bottom of sign shall be seven (7) feet – eight (8) feet measured vertically from the bottom of the sign to the elevation of the near edge of the pavement or from the walkway. Posts for all interim signs should be square tubular post meeting the requirements of Section 911, QPL-35, and Construction Detail T-3A (Type 7, 8, and 9 Square Tube Post Installation Detail). Ground mounted sign(s) greater than 48" wide shall be mounted on two posts. For barrier mounted sign, single post mount is allowed.

The post(s) shall not extend beyond the top of the sign(s). The sign(s) shall be substantially plumbed and leveled.

Galvanized U-Channel post can be used in lieu of square tubular posts until December 31, 2019. The U-Channel post shall meet the requirements of Section 911. Ground mounted sign(s) greater than nine (9) square feet shall be mounted on two posts. All posts replaced or installed on or after January 01, 2020 shall be square tubular posts.

Unprotected interim posts shall be spliced as shown in Detail 150-A, unless full length unspliced posts are used. Unprotected post splices will not be permitted any higher than four inches above the ground line to lessen the possibility of affecting the undercarriage of a vehicle. Installation of posts may require establishment of openings in existing pavements, islands, shoulders etc.

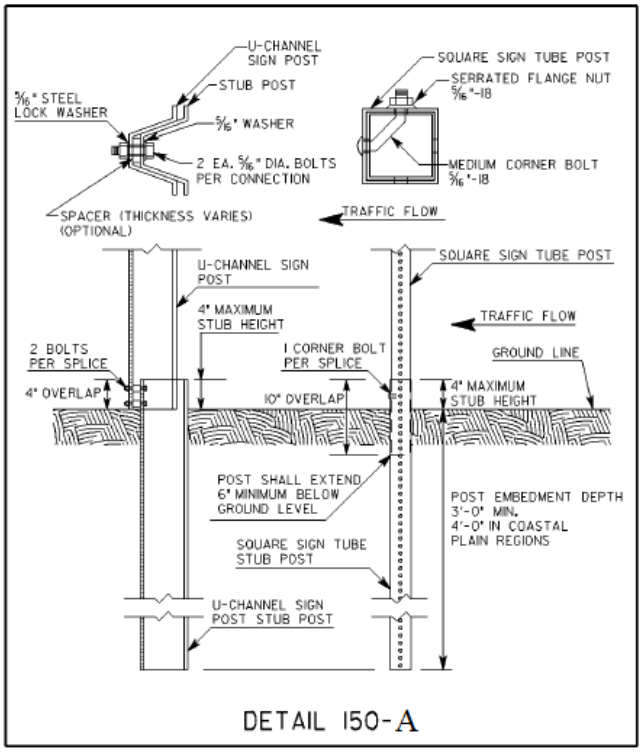

B. Sign Blanks and Panels

All TTC sign blanks and panels should conform to Section 912 of the Specifications. Alternative sign blank materials (composites, polycarbonates, fiberglass reinforced plastics, recycled plastics, etc.) shall have a letter of approval from the Office of Materials and Testing for use as interim construction signs before these materials are allowed to be incorporated into the work, unless these rigid sign blanks are currently approved as a crashworthy sign blank material under OPL 34.

Unless specified elsewhere in the contract, specifications, plans, and/or directed by the Engineer, sign sizes are according to the following:

1. All construction signs sizes should follow the dimensions provide in MUTCD Table 6F-1 "Temporary traffic Control Zone Sign and Plaque Sizes" under the column for "Freeway or Expressway".

2. For all other signs used just for staging, the sign sizes should follow the dimensions provide in MUTCD Table 2B-1 "Regulatory Sign and Plaque Sizes" for the largest size.

3. Permanent signs used for staging shall be according to plans.

Plywood blanks or panels will not be permitted.

The use of flexible signs will not be permitted.

For utility work not included in the contract, the utility contractor may use flexible signs within the project limits.

150.2.8 Pavement Markings

All temporary traffic striping shall conform to the requirements of Section 652, Section 653, Section 657, Section 658, Section 659, and QPL-46.

A. All Traffic Striping for 45 Days or Less (≤45 Days)

All traffic striping that will be in place for 45 days or less shall be 4 inches or greater in width.

B. All Temporary Striping Beyond 45 days (>45 Days)

All traffic striping applied on intermediate surfaces shall be a minimum 5 inches in width or as shown on plans. On final surfaces when temporary striping will be overlaid or eradicated, the temporary striping shall be a minimum 5 inches in width.

C. All Temporary Traffic Striping on Final Surface

All temporary traffic striping applied to final surfaces which will not be overlay or grinded may be 4 inches in width or as shown on the plans.

150.2.9 Portable Changeable Message Signs

Unless specified as a paid item in the contract, the use of a portable changeable message sign will not be required. When specified, a portable changeable message sign (PCMS) shall meet the minimum requirements of Section 632, MUTCD (6F.60) and be on QPL-82. The maximum amount of messages allowed to be flashed on one PCMS is two phases (flashes). The language and the timing of the messages shall comply with the MUTCD and Section 632. When used as an advanced device, the PCMS should typically be placed ahead of the construction activities. If the PCMS is used as a substitute for another device, then the requirements for the other device apply.

Any PCMS in use, which is not protected by positive barrier protection, shall be delineated by a minimum of three drums that meet the requirement of Subsection 150.2.04.B. The drum spacing shall not exceed a maximum of ten

(10') feet as shown in Detail 150-B. When the PCMS is within twenty (20') feet of the opposing traffic flow, the trailing end of the PCMS shall be delineated with a minimum of three drums spaced in the same manner as the approach side of the PCMS.

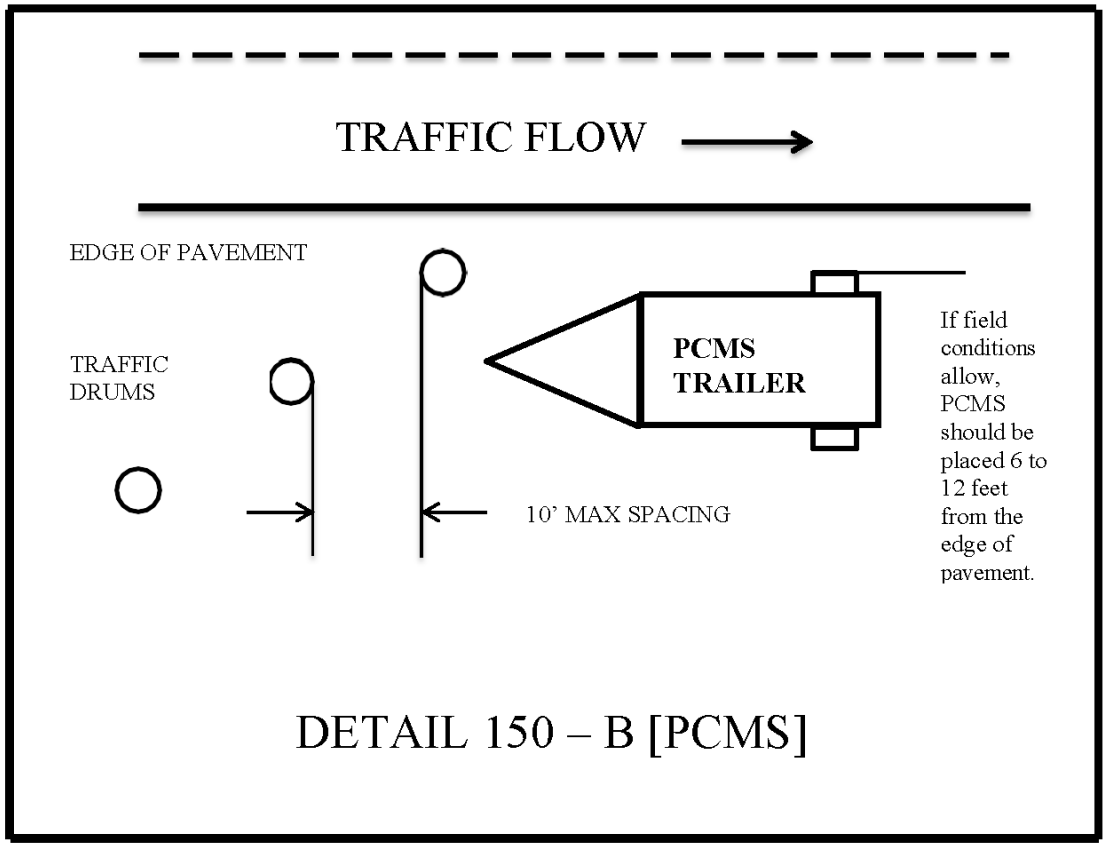

DETAIL 150 – B [PCMS]

When not in use, the PCMS shall be removed from the roadway, unless protected by positive barrier protection. If the PCMS is protected by positive barrier protection, the sign panel shall be turned away from traffic when not in use.

150.2.10 Portable Impact Attenuators

This work consists of the furnishing (including spare parts), installation, maintenance, relocation, reuse as required, and removal of Portable Impact Attenuator Units/Arrays.

Portable Impact Attenuator Unit/Arrays installation shall conform to the requirements of Section 648, Manufacturer's recommendations and Georgia Standard 4960 "Temporary Barrier (End Treatment Options)" and shall be installed at locations designated by the Engineer, and/or as shown on the plans. When gating

attenuators are used, the contractor shall maintain the appropriate recovery area in accordance with the manufacturers' recommendations.

Generic sand/water loaded modules are prohibited. Manufacturers' sand/water loaded modules with specific arrays that have been NCHRP 350/MASH approved can be used in appropriate locations.

The test level of protection provided shall equal or exceed the speed limit. Test level 3 shall be used for forty-five (45) mph or above.

150.2.11 Portable Temporary Traffic Control Signals

The use of Portable Temporary Traffic Control Signals shall meet the following minimum requirements:

Only two-lane, two-way roadways will be allowed to utilize Portable Temporary Traffic Control Signals.

All portable traffic control signals shall meet the physical display and operational requirements of conventional traffic signals described in the MUTCD.

Each signal face shall have at least three lenses. The lenses shall be red, yellow, or green in color and shall give a circular type of indication. All lenses shall be twelve (12") inches nominal in diameter.
A minimum of two signal faces shall face each direction of traffic. A minimum of one signal head shall be suspended over the roadway travel lane in a manner that will allow the bottom of the signal head housing to be not less than seventeen (17') feet above and not more than nineteen (19') feet above the pavement grade at the center of the travel lane. The second signal head may be located over the travel lane with the same height requirements or the second signal head may be located on the shoulder. When the signal head is located on the shoulder, the bottom of the signal head housing shall be at least eight (8') feet but not more than (15') feet above the pavement grade at the center of highway.

Advance warning signage and appropriate pavement markings shall be installed as part of the temporary signal operation.

The signals shall be operated in a manner consistent with traffic requirements. The signals may be operated in timed-mode or in a vehicle-actuated mode. The signals shall be interconnected in a manner to ensure that conflicting movements cannot occur. To ensure that the appropriate operating pattern, including timing is displayed to the traveling public, regular inspections, including the use of accurate timing devices shall be made by the Worksite Traffic Control Supervisor. If, at any time, any part of the system fails to operate within these requirements then the use of the signal shall be suspended and the appropriate flagging operation shall begin immediately.

The Worksite Traffic Control Supervisor (WTCS) shall continuously monitor the portable traffic control signal to insure compliance with the requirements for maintenance under the MUTCD. The signal shall be maintained in a manner consistent with the intention of the MUTCD, with emphasis on cleaning of the optical system. Timing changes shall be made only by the WTCS. The WTCS shall keep a written record of all timing changes.

The portable temporary signal shall have two power sources and shall be capable of running for seven calendar days continuously.

The Contractor shall have an alternate temporary traffic control plan in the event of failure of the signal.

150.2.12 Raised Pavement Markers

Raised pavement markers (RPMs) shall meet the requirements of Section 654 and QPL-76 .

150.2.13 Rumble Strips

Rumble strips incorporated into the work shall meet the requirements of Section 429 and the MUTCD. Existing rumble strips that are positioned in the traveled way to warn traffic of a stop condition shall be reinstalled prior to opening to traffic. Based on the following requirements:

Intermediate surfaces that will be in use for more than forty-five (45) calendar days shall have rumble strips reinstalled on the traveled way in the area of a stop condition. Non-refundable deductions in accordance with Subsection 150.5.01 will be assessed for any intermediate surface in place for greater than 45 days without rumble strips.

Rumble strips shall be installed on the final surface within fourteen (14) calendar days of the placement of the final surface in the area of the stop condition. Failure to install within fourteen (14) calendar days will result in assessment of non-refundable deductions in accordance with Subsection150.5.01.

Prior to the removal of any rumble strips located in the travel lane, stop ahead (W3-1) warning signs shall be double indicated ahead of the stop condition. These warning signs shall be a minimum of 48 inches by 48 inches. These warning signs shall remain in place until the rumble strips have been reinstalled on the traveled way. Any existing warning signs for the stop ahead condition shall be removed or covered while the 48" X 48" (W3-1) signs are in place. When the rumble strips have been reinstalled, these warning signs should be promptly removed and any existing signage placed back in service.

150.2.14 Temporary Barriers

A. Design:

Temporary barriers shall meet the requirements of Sections 620. The lengths of advancement should be in accordance with Georgia Standard 4000W "Lengths of Advancement, Clear Zone Distances, and Fill Height Embankment". The approach end of the taper should have 10:1 or flatter ground slope. Temporary barriers shall not be used as a channelization device. Their use is in accordance with MUTCD (6F.85).

B. Application:

Temporary barriers shall be placed as required by the plans, standards, and as directed by the Engineer. When Temporary barrier is located twenty feet (≤ 20') or less from a travel lane, yellow reflectors shall be fixed to the top of the barrier at intervals not greater than forty feet (≤ 40') in the longitudinal section and twenty feet (20') in the taper section and shall be mounted approximately two inches (2") above the barrier. If both lanes of a two-lane two-way roadway are within twenty feet (≤ 20') or less of the barrier then the reflectors shall be installed for both directions of traffic.

The reflectors shall be hundred (100) square inches (ASTM Type VII or VIII/ Type XI) reflective sheeting mounted on flat-sheet blanks. The reflectors shall be mounted approximately two inches above the top of the barrier. The reflectors shall be attached to the barrier with adhesive or by a drilled-in anchor type device. The reflectors shall not be attached to a post or board that is placed between the gaps in the barrier sections.

Approach end of Temporary barrier shall be protected according to Georgia Standard 4960 "Temporary Barrier (End Treatment Options)" or by a portable impact attenuator.

On interstates or other controlled access highways where lane shifts or crossovers cause opposing traffic to be separated by less than forty feet (<40'), portable barrier should be used as a separator.

150.2.15 Temporary Guardrail Anchorage- Type 12

This work consists of the furnishing, installation, maintenance and removal of Temporary Guardrail Anchorage- Type 12 used for Portable Barrier or temporary guardrail end treatment. Materials used in the Temporary Guardrail Anchorage- Type 12 shall meet the requirements of Section 641 of the Specifications and current Georgia Standards and may be new or used. Materials salvaged from the Project, which meet the requirements of Standards, may be utilized if available. The use of any salvaged materials will require prior approval of the Engineer.

Installation of the Temporary Guardrail Anchorage- Type 12 shall conform to the requirements of the Plans, current Georgia Standards and Section 641 of the Specifications. Installation shall also include sufficient additional guardrail and appurtenances to effect the transition and connection to Temporary Concrete Barrier as required by the details in Georgia Standard 4960 "Temporary Barrier (End Treatment Options)".

150.2.16 Temporary Traffic Signals

Temporary traffic signals shall meet the requirements of Section 647 and the MUTCD.

150.3 Construction Requirements

150.3.1 General

A. Implementation Requirements

No work shall be started on any project phase until the appropriate traffic control devices have been placed in accordance with the Project requirements. Changes to traffic flow shall not commence unless all labor, materials, and equipment necessary to make the changes are available on the Project.

When any shift or change is made to the location of traffic or to the flow patterns of traffic, including pedestrian traffic, the permanent safety features shall be installed and fully operational before making the change. If staging or site conditions prevent the installation of permanent features then the equivalent interim devices shall be utilized. This work shall also include any necessary removal and reinstallation of guardrail panels to achieve the required panel lap to accommodate the appropriate shift and traffic flow including the final traffic flow configuration. The cost of performing this work shall be included in Traffic Control-Lump Sum.

Any section of the work that is on a new location shall have all permanent safety features installed and fully operational before the work is opened to traffic. Safety features shall include, but are not limited to the following items:

1) Guardrails including anchors and delineation with properly lapped panels
2) Impact attenuators
3) Traffic signals
4) Warning devices
5) Pavement markings including words, symbols, stop bars, and crosswalks
6) Roadway signs including regulatory, warning, and guide

Outdoor lighting shall be considered as a safety feature for welcome centers, rest areas, and weigh station projects. For typical roadway type projects, new street lighting is not considered a safety feature, unless specifically noted in the plans or in the special conditions.

B. Maintenance of Traffic Control Devices

Traffic control devices shall be in acceptable condition when first erected on the project and shall be maintained in accordance with Section 104. throughout the construction period. All unacceptable traffic control devices shall be replaced within twenty-four (24) hours. When not in use, all traffic control devices shall be removed, placed or covered so as not to be visible to traffic. All construction warning signs shall be removed within seven (7) calendar days after time charges are stopped or pay items are complete. If traffic control devices are left in place for more than ten (10) calendar days after completion of the Work, the Department shall have the right to remove such devices, claim possession thereof, and deduct the cost of such removal from any monies due, or which may become due, the Contractor.

C. Traffic Interruption Restrictions

The Department reserves the right to restrict construction operations when, in the opinion of the Engineer, the continuance of the Work would seriously hinder traffic flow, be needlessly disruptive or unnecessarily inconvenience the traveling public. The Contractor shall suspend and/or reschedule any work when the Engineer deems that conditions are unfavorable for continuing the Work.

Advanced notification requirements to the Contractor to suspend work will be according to the events and the time restrictions outlined below:

Incident management - No advanced notice required

Threatening/Inclement weather – twenty-four (24) hours

Holiday, sporting events, unfavorable conditions - Three (3) calendar days

If the work is suspended, the Contractor may submit a request for additional contract time as allowed under Section 108. The Department will review the request and may grant additional contract time as justified by the impact to the Contractor's schedule. Compensation for loss of productivity, rescheduling of crews, rental of equipment or delays to the Contractor's schedule will not be considered for payment. Additional contract time will be the only consideration granted to the Contractor.

D. Work Zone Restrictions

1. Interstate

The Contractor should not simultaneously perform work on both the inside shoulder and outside shoulder on either direction of traffic flow when the Work is within 12 feet of the travel-way. Shoulders can be alternated if areas are separated by at least one-half mile of distance.

2. Non-Interstate Divided Highways

The Contractor should not simultaneously perform work on both the inside shoulder and outside shoulder on either direction of traffic flow when the Work is within 12 feet of the travel-way. Shoulders can be alternated if areas are separated by at least one-half mile distance in rural areas or at least 500 feet of distance in urban areas.

3. Non-Divided Highways

a. The Contractor should not simultaneously perform work on opposite sides of the roadway when the work is within 12 feet of the travel-way. Shoulders can be alternated if areas are separated by at least one-half mile of distance in rural areas or at least 500 feet of distance in urban areas.

b. On two-lane projects where full width sections of the existing subgrade, base or surfacing are to be removed, and new base, subgrade, or surfacing are to be constructed, the Contractor should maintain one-lane traffic through the construction area by removing and replacing the undesirable material for half the width of the existing roadway at a time. Replacement should be made such that paving is completed to the level of the existing pavement in the adjacent lane by the end of the workday or before opening all the roadway to traffic.

E. Work Zone Geometric Restrictions

There should be no reduction in the total number of available traffic lanes including turning lanes that existed prior to construction, except as specifically allowed by the Contract and as approved by the Engineer.

Travel lane Clearances: All portions of the work should maintain the following minimum requirements:

Horizontal: The combined dimensions of the paved shoulder and the roadway surface remaining outside the Work Zone should be no less than sixteen feet (≥ 16') in width at any location.

Vertical: The overhead clearance should not be reduced to less than fifteen feet (≥ 15') at any location.

The restrictions above apply to all shifts, lane closures, on-site detours and off-site detours whether shown in the contract or proposed by the Contractor. It shall be the responsibility of the Contractor to verify that these minimum requirements have been met before proceeding with any phase of the Work. Two-lane, two-way roadways may have temporary horizontal restrictions of less than sixteen feet (≥ 16') during flagging operations. The minimum horizontal clearance should be restored before the flagging operation is removed.

F. Clear Zone

At the end of the workday, all equipment, materials, and TTC devices not in use should be moved out of the clear zone or behind positive protection. The clear zone is defined by Georgia Standard 4000W "Lengths of Advancement, Clear Zone Distances, Fill Height Embankment". For urban roadway with curb, the minimum set back is six (6') feet from the curb face. If stored behind positive protection, proper lengths of advancement should be maintained. If stored behind guardrail the items shall be a minimum five feet (≥ 5') from the face of the guardrail and not in the recovery zone of the anchor.

The Worksite Traffic Control Supervisor (WTCS) shall monitor the work to ensure that all the rocks, boulders, construction debris, stockpiled materials, equipment, tools and other potential hazards are kept clear of the travel lane.

G. Milled Surface Restrictions

Unless modified by the special conditions, a milled surface on any asphaltic concrete surface shall not be allowed to remain open to traffic for a period of time that exceeds thirty (> 30) calendar days.

H. Construction Vehicles

The Contractor's vehicles shall travel in the direction of normal roadway traffic and shall not reverse direction except at intersections, interchanges, or approved temporary crossings. The Contractor may submit a plan requesting that construction traffic be allowed to travel in the opposite direction of normal traffic when it would be desirable to modify traffic patterns to accommodate specific construction activities.

Prior approval of the Engineer shall be obtained before any construction traffic is allowed to travel in a reverse direction. If the Contractor's submittal is approved, the construction traffic shall be separated from normal traffic by appropriate traffic control devices.

The parking of Contractor's and/or workers' personal vehicles within the work area or adjacent to traffic is prohibited. It shall be the responsibility of the Worksite Traffic Control Supervisor to ensure that any vehicle present at the worksite is necessary for the completion of the work.

I. Environmental Impacts

The Contractor shall ensure that dust, mud, and other debris from construction activities do not interfere with normal traffic operations or adjacent properties.

J. Existing Street Lights

Existing street lighting shall remain lighted as long as practical and until removal is approved by the Engineer.

K. Nighttime Work Lighting

Adequate temporary lighting shall be provided at all nighttime work sites where workers will be immediately adjacent to traffic.

L. Removal/Reinstallation of Miscellaneous Items

In the prosecution of the Work, if it becomes necessary to remove any existing signs, markers, guardrail, etc. not covered by specific pay item, they shall be removed, stored and reinstalled, when directed by the Engineer, to line and grade, and in the same condition as when removed.

150.3.2 Personnel – Worker Safety Apparel

In accordance with MUTCD (6D.03) all workers, within the right-of-way who are exposed either to traffic or to work vehicles and construction equipment within the TTC zone, shall wear high-visibility safety apparel that meets the Performance Class 2 or better.

150.3.3 Signage - General

A. Signing Requirements of the Temporary Traffic Control (TTC) Plan

When existing regulatory, warning or guide signs are required for proper traffic and pedestrian control, the Contractor shall maintain these signs in accordance with the temporary traffic control (TTC) plan. The Contractor shall review the status of all existing signs, interim signs added to the work, and permanent sign installations that are part of the work to eliminate any conflicting or non-applicable signage in the TTC Plan. The Contractor's review of all signs in the TTC Plan shall establish compliance with the requirements of the MUTCD and Section 150. Any conflicts shall be reported to the Engineer immediately and the WTCS shall take the necessary measures to eliminate the conflict.

The Contractor shall make every effort to eliminate the use of interim signs as soon as the Work allows for the installation of permanent signs.

All existing illuminated signs shall remain lighted and be maintained by the Contractor.

Existing street name signs shall be maintained at street intersections.

B. Conflicting or Non-Applicable Signs

Any sign(s) or portions of a sign(s) that are not applicable to the TTC plan shall be covered so as not to be visible to traffic or shall be removed from the roadway when not in use. The WTCS shall review all traffic shifts and changes in the traffic patterns to ensure that all conflicting signs have been removed. The review shall confirm that the highest priority signs have been installed and that signs of lesser significance are not interfering with the visibility of the high priority signs. High priority signs include signs for road closures, shifts, detours, lane closures and curves. Any signs, such as speed zones and speed limits, passing zones, littering fines and litter pick up, that reference activities that are not applicable due to the presence of the Work shall be removed, stored and reinstalled when the Work is completed.

Failure to promptly eliminate conflicting or non-applicable signs shall be considered as non-performance under Subsection 150.5.01.

C. Removal of Existing Signs and Supports

The Contractor shall not remove any existing signs and supports without prior approval from the Engineer. All existing signs and supports which are to be removed shall be stored and protected if this material will be required later in the work as part of the TTC plan. If the signs are not to be utilized in the work then the signs will become the property of the Contractor unless otherwise specified in the contract documents.

D. Interim Guide, Warning and Regulatory Signs

Interim guide, warning, or regulatory signs required to direct traffic and pedestrians shall be furnished, installed, reused, and maintained by the Contractor in accordance with the MUTCD, the Plans, Special Provisions, Special Conditions, or as directed by the Engineer. These signs shall remain the property of the Contractor. When the signs are used for long-term stationary operations as defined MUTCD (6G.02), the bottom of all interim signs shall be mounted seven feet (7') to eight feet (8') above the level of the pavement edge or sidewalk. The signs offset should be six feet (6') to twelve feet (12') from the pavement edge or two feet ($\geq$ 2') minimum for sidewalks according to MUTCD (6F-1). Special Conditions under Subsection 150.6 may modify this requirement.

Portable signs may be used when the duration of the work is less than three (3) days or as allowed by the special conditions in Subsection 150.6. Portable signs shall be used for all punch list work. Portable interim signs shall be mounted a minimum of one foot (≤ 1') above the level of the pavement edge for directional traffic of two (2) lanes or less and at seven feet (7') for directional traffic of three (3) or more lanes according to MUTCD (6F-2). Signs shall be mounted at the height recommended by the manufacturer's crashworthy testing requirements.

All sign blanks shall be rigid whether the sign is mounted as a portable sign, on a Type III barricade or as a permanent mount height sign. Utilities and their subcontractors working in the project limits, and not included in the project contract, may use non-rigid signs.

E. Existing Special Guide Signs

Existing special guide signs on the Project shall be maintained until conditions require a change in location or legend content. When change is required, existing signs shall be modified and continued in use if the required modification can be made within existing sign borders using design requirements (legend, letter size, spacing, border, etc.) equal to that of the existing signs, or of Subsection 150.3.E.2. Differing legend designs shall not be mixed in the same sign.

1. Special Guide Signs

   Special guide signs are those expressway or freeway guide signs that are designed with message content (legend) that applies to a particular roadway location. When an existing special guide sign is in conflict with work to be performed, the Contractor shall remove the conflicting sign and reset it in a new, non-conflicting location which has been approved by the Engineer.

2. Interim Special Guide Signs

   When it is not possible to utilize existing signs, either in place or relocated, the Contractor shall furnish, erect, maintain, modify, relocate, and remove new interim special guide signs in accordance with the Plans or as directed by the Engineer. Interim special guide signs that may be required in addition to, or a replacement for, existing expressway and freeway (interstate) signs shall be designed and fabricated in compliance with the minimum requirements for guide signing contained in Part 2E "Guide Signs – Freeway and Expressway" of the MUTCD. All interstate shields on these signs shall be 48 inches and 60 inches for two-numeral and three-numeral routes, respectively.

   The road name of the exit or route shield shall be placed on the exit gore sign.

3. Interim Overhead Guide Sign Structures

   Interim overhead special guide sign structures are not required to be lighted unless specifically required by the Plans. If lighting is required, the sign shall be lighted as soon as erected and shall remain lighted, during the hours of darkness, until the interim sign is no longer required. The Contractor shall notify the Power Company at least thirty (30) days prior to desire connection to the power source.

4. Permanent Special Guide Signs

   The installation of new permanent special guide signs and the permanent modification or resetting of existing special guide signs, when included in the contract, shall be accomplished as soon as practical to minimize the use of interim special guide signs. If lighting is required by the Plans, all new permanent overhead special guide signs shall be lighted as soon as erected.

F. Stop Sign Regulated Intersections

For intersections that utilize stop sign(s) to control the flow of traffic and to restrict the movement of vehicles, the stop sign(s) shall be maintained for the duration of the work or until such time that the stop condition is eliminated or until an interim or permanent traffic signal can be installed to provide proper traffic control. The traffic signal shall be installed and properly functioning before the removal of the existing stop sign(s) is permitted. If the existing intersection is enhanced traffic control features, such as stop lines, double indicated stop signs, oversized signs, advanced warning stop ahead signs, rumble strips on the approaches or flashing beacons located overhead or on the shoulders then these features shall be maintained for the duration of the project or until the permanent traffic control plan has been implemented.

Whenever the staging of the work requires that the traveled way be relocated or realigned the Contractor shall reinstall all enhanced traffic control features noted above on the newly constructed sections of the work. The cost of relocating the stop lines, stop signs, advanced warning signs, the rumble strips and the flashing beacons shall be included in the price bid for Traffic Control - Lump Sum unless individual pay items are included in the contract for rumble strips and/or flashing beacons. When pay items are included in the contract for rumble strips or flashing beacons then these items will be paid per each.

When staging requires the relocation or realignment of an existing stop condition, it may be necessary to consider the addition of enhanced traffic control features even though none existed at the original location. Horizontal and vertical alignment changes at a new location may have decreased or restricted sight distance or the stop condition may occur sooner than in the previous alignment. If these conditions occur, then the Engineer and/or the WTCS should consider additional measures to enhance the motorist's awareness of the changes even though the staging plans may not address enhanced features. Stop signs should be a minimum of 36 inches for interim situations. The use of 48 inch stop signs may be warranted under project specific conditions. Flags may be used on interim/permanent stop signs that are mounted at seven (7') feet in height for a short duration in order to direct additional attention to a new or relocated stop sign(s). Flags should not be used for durations exceeding two weeks unless unusual or site specify conditions warrant a longer period of time. The use of Type "A" flashing red light(s) attached to the stop sign(s) may be appropriate during the same period that the flags are in use to increase attention.

The use of rumble strips and/or portable changeable message signs may be considered. The use of new rumble strips, where none previously existed, shall have the prior approval of District Traffic Operations before being included as part of the temporary traffic control plan. The message(s) displayed on any PCMS shall have the prior approval of the Engineer and the message(s) shall be included as part of the TTC plan for the interim staging.

The placement of any additional interim ground mounted signs and posts or stop lines shall be considered as incidental to the price bid for Traffic Control - Lump Sum. The installation of rumble strips, flashing beacons or the use of Portable Changeable Message Signs (PCMS) shall be considered as Extra Work unless pay items are included in the contract.

G. Low Shoulder Signage

1. Low Shoulder for Construction/Reconstruction/Resurfacing Projects

" Low Shoulder" (W8-9) signs shall be erected when a difference in elevation less than four (< 4') feet from the traveled way, exceeds one inch (> 1") but does not exceed three inches (≤3") between the travel lane and any type of shoulder.

The spacing of the signs shall not exceed one (1) mile and the signs shall be placed immediately past each crossroad intersection. The "Low" signs shall remain in place until the difference in elevation is eliminated and the shoulder has been dressed and permanently grassed for a minimum of thirty (30) calendar days. These signs shall be furnished, installed, maintained and removed by the Contractor as part of Traffic Control-Lump Sum. These signs shall be fluorescent orange with black borders.

2. Shoulder Drop-Off for Construction/Reconstruction/Resurfacing Project

"Shoulder Drop-Off" (W8-17) signs shall be used when a difference in elevation, less than four feet (< 4') from the traveled way, exceeds three inches (> 3") and is not protected by positive barrier protection. These warning signs shall be placed in advance of the drop-off.

The spacing of the signs shall not exceed one (1) mile and the signs shall be placed immediately past each crossroad intersection. The "Shoulder Drop-Off" signs shall remain in place until the difference in elevation is eliminated and the shoulder has been dressed and permanently grassed for a minimum of thirty (30) calendar days. These signs shall be furnished, installed, maintained, and removed by the Contractor as part of Traffic Control-Lump Sum. These signs shall be black borders on fluorescent orange background.

H. Bump Signage

A bump sign (W8-1) shall be utilized when a transverse joint in the pavement structure has a vertical difference in elevation of three quarters (≥ 3/4") of an inch or greater in depth with no horizontal taper to ramp the traffic from one elevation to the other. This condition typically occurs at approach slabs during pavement milling operations and at transverse joints in asphaltic pavement lifts. Other conditions include utility and storm drainage repairs that require concrete placement for patching and/or steel plating.

The W8-1 sign shall be placed sufficiently in advance to warn the motorist of the condition.

I. Sign Visibility

All existing, interim and new permanent signs shall be installed so as to be completely visible and legible for an advance distance in compliance with the MUTCD. Any clearing required for maintaining the line of sight to existing, interim or permanent signs shall be done as part of the requirements of the TTC plan. The clearing shall include any advance warning signs, both interim and permanent, that are installed as a part of the work including advance warning signs that are installed outside the limits of the project. Limbs, brush, construction equipment and materials shall be kept clear of the driver's line of sight to all signs that are part of the TTC plan.

150.3.4 Advance Warning Signs

A. Project Signs - All Type of Highways

Advance warning signs shall be placed ahead of the work area in accordance with Part 6 of the MUTCD and shall include a series of at least three advance road work (W20-1) signs placed at the termini of the project. The series shall have the legend ROAD WORK (1500 FEET, 1000 FEET, AND 500 FEET).

At grade intersecting roadways and on-ramps shall be signed with a minimum of one ROAD WORK AHEAD sign.

When work terminates at a "T" intersection, a minimum of one "ROAD WORK AHEAD" sign shall be placed in advance of the intersection and one "END ROAD WORK" sign shall be placed at the termination end of the intersection. Field conditions may require the use of additional warning signage.

1. State Routes

Advanced Warning Signs on State Routes shall be a minimum dimension of forty-eight inches by forty-eight inches (48" x 48"). When a State Route intersects a project which consists of adding travel lanes, reconstructing an existing roadway or new location work, the State Route approaches shall have a

minimum of three (W20-1) advanced warning signs (1500 ft., 1000 ft., 500 ft.). The termination end of an intersecting State Route shall have END ROAD WORK signage.

The W20-1 signs shall be placed at the termini of the project or sufficiently in advance of the termini to allow for lane shifts, lane closures and other activities which may also require advanced warning signs. The advanced warning signs for the project should not overlap with the advanced warning signs for lane shifts, lane closures, etc.

The length of a work zone should be held to the minimum length required to accomplish the work. If a project has multiple individual worksites within the overall limits of the project, each site should be signed individually if the advance warning signs for each site can be installed without overlapping an adjacent worksite. As soon as the work is completed at any individual site, the warning signs shall be removed from that site. Clean-up work and punch list work shall be performed with portable signage.

Project mileage indicated on the G20-1 sign shall be the actual project mileage rounded up to the nearest whole mile. Projects less than two (< 2) miles in length or individual worksites that are part of a multiple worksite project may delete this sign. The G20-1 sign shall be forty-eight inches by twenty-four inches (48" x 24") and the G20-2 sign shall be forty-eight inches by twenty-four inches (48" x 24").

2. Interstate, Limited Access and Multilane Divided Highways

In addition to the W20-1 signs required at 500 ft., 1000 ft. and 1500 ft., multi-lane divided highways shall also have additional advanced warning signs installed with the legend "ROAD WORK (2 MILES, 1 MILE and 1/2 MILE). All construction warning signs on divided highways shall be double indicated (i.e., on the left and right sides of the roadway.) If the use of the half (½) mile, one (1) mile and two (2) mile advanced warning signs cause an overlap with other work or do not benefit field conditions then the Engineer may review the use of these signs and eliminate their installation. When the posted speed limit is fifty (≤ 50) mph or less, the one-half (½) mile, one (1) mile and two (2) mile signs should be eliminated especially in urban areas.

The W20-1 advance warning signs for ROAD WORK 500 FEET; 1000 FEET; and 1500 FEET shall be temporarily covered when work involving the advanced warning signs for lane shifts and lane closures overlap these signs. The ROAD WORK ½ MILE, ROAD WORK 1 MILE, and ROAD WORK 2 MILES shall be in place when the 500, 1000 and 1500 feet signs are temporarily covered.

When the temporary traffic control zone already has advanced warning (W20-1) signs installed the W20-1 signs required for lane closures under Standard 9106 should be eliminated.

3. Ramp Work on Limited Access Highways

The work zone shall not be signed for the entire length of the mainline of a limited access highway when only short individual worksites, interchange or ramp work is being performed.

When work is restricted to ramp reconstruction or widening activities, the advance warning signs on the mainline section of the limited access highway shall be limited to the use of portable advance warning signs. These portable advance warning signs shall only be utilized when work activity is within the gore point of the ramp and the mainline traveled way or work is active in the acceleration/deceleration lane adjacent to the mainline traveled way. Portable advance warning signs (W20-1: 1500 ft. /1000 ft. /500 ft.) shall be installed on the traveled way of the limited access highway when the above conditions are present. The advance warning signs shall be installed only in one direction where work is active. All portable signs shall be double indicated. When work is not active, the ramp work shall be advanced warned by the use of a single forty-eight inches by forty-eight inches (48" x 48") "ROAD WORK AHEAD" (W20-1) with an "ON RAMP" plaque (W13-4p) sign along the right shoulder of the mainline traveled way prior to the beginning of the taper for the deceleration lane. Differences in elevation shall be in compliance with the requirements of Subsection 150.3.11 prior to the removal of the portable (W20-1) advanced warning signs from the mainline.

B. Highway Work Zone

In accordance with Georgia Code, O.C.G.A. § 40-6-188, all sections or segments of the roadway under construction or reconstruction shall be signed as a Highway Work Zone except non-state highway two-lane two-way resurfacing projects. Two conditions can be applied to a Highway Work Zone. Condition 1 is when no reduction in the existing speed limit is required. Condition 2 is when worksite conditions require a reduction of the speed limit through the designated Work Zone. Properly marking a Highway Work Zone shall include the following minimum requirements:

1. No Reduction in the Existing Posted Speed Limit in Highway Work Zone

   a. Signage shall be posted at the beginning point of the Highway Work Zone warning the traveling public that increased penalties for speeding violations are in effect. The beginning point of Highway Work Zone is at the project limits, start of work zone, or at the start of the first taper. The HWZ-2 sign shall be placed a minimum of 600 feet in advance of the Highway Work Zone and shall not be placed more than 1000 feet in advance of the Work Zone. If no speed reduction is required, it is recommended that the HWZ-2 be placed at 750 feet from the work area between the ROAD WORK 500 FT. and the ROAD WORK 1000 FT. signs.

      HWZ-2 signs shall be placed at intervals not to exceed one mile for the length of the project. HWZ-2 signs should be placed on the mainline after all major intersections except State Routes. State Routes shall be signed as per the requirements for intersecting roadways below.

   b. The existing speed limit shall be posted at the beginning of the Work Zone. Existing Speed Limit signs (R2-1) shall be maintained.

   c. Intersecting state routes shall be signed in advance of each intersection with the Work Zone with a HWZ-2 sign to warn motorists that increased fines are in effect. All other intersecting roadways that enter into a designated Highway Work Zone may be signed in advance of each intersection with the Work Zone. When construction equipment and personnel are present in the intersection on the mainline of a multi-lane roadway, the intersecting side roads shall be signed in advance with HWZ-2 signs. As soon as the work operation clears the intersection, the signage may be removed.

   d. Sign HWZ-3 shall be posted at the end of the Highway Work Zone indicating the end of the zone and indicating that increased penalties for speeding violations are no longer in effect.

   e. When a designated Highway Work Zone is no longer necessary, all signs shall be removed immediately.

2. Reducing the Speed Limit in a Highway Work Zone

   Highway Work Zone signs shall be posted as required in Condition 1 above in accordance with Detail 150-C.

   A "Reduce Speed Limit Ahead" (W3-5) sign shall be posted 600 feet prior to the reduced speed limit.

   Then a "Speed Limit" signage (R2-1) for the reduced speed limit shall be erected at the beginning of the work zone. Additional signs shall be placed at whichever is least:

   a. on non-interstate roads after every junction with a numbered (state or U.S.) route.

   b. on interstates entrance ramp 1,500 feet from the end of the entrance taper. Detail 150-D

   c. on non-interstate and interstate a maximum spacing of no greater than one (1) mile apart.

On multi-lane divided highways, the speed limit signs shall be double indicated when the reduced speed is in use.

Additional signs may be necessary to adjust for actual field conditions.

For limited access (interstate) highways and controlled access multi-lane divided highways, the posted speed limit shall be reduced as required below.

When any one or more of the following conditions exist and the existing speed limit is sixty-five (65) mph or seventy (70) mph, the speed limit shall be reduced by ten (10) mph. If the existing speed limit is sixty (60) mph, the speed limit should be reduced by five (5) mph. If the existing speed limit is fifty-five (≤ 55) mph or less, the Contractor can only reduce the speed limit with the prior approval of the Engineer. The reduction in the speed limit shall be no greater than ten (10) mph:

a) Lane closure(s) of any type and any duration.
b) The difference in elevation exceeds two inches (> 2") adjacent to a travel lane as shown in Subsection 150.3.11, Detail 150-E, Detail 150-F.
c) Any areas where equipment or workers are within ten feet (10') of a travel lane.
d) Temporary portable concrete barriers located less than two feet (2') from the traveled way.
e) As directed by the Engineer for conditions distinctive to this project.

When the above conditions are not present, the speed limit shall be immediately returned to the existing posted speed limit. A speed reduction shall not be put in place for the entire length of the project unless conditions warranting the speed reduction are present for the entire project length. All existing speed limit signs within the temporary speed reduction zone shall be covered or removed while the temporary reduction in the speed limit is in effect. All signs shall be erected to comply with the minimum requirements of the MUTCD.

At a minimum, the following records shall be kept by the WTCS:

a) Identify the need for the reduction.
b) Record the time of the installation and removal of the temporary reduction.
c) Fully describe the location and limits of the reduced speed zone.
d) Document any accident that occurs during the time of the reduction.

A copy of the weekly records for reduced speed zones shall be submitted to the Engineer.

When a pilot vehicle is used on a two-lane two-way roadway, the speed limit should not be reduced. For special conditions specific to the work, on two-lane two-way roadways or multi-lane highways, the contractor may reduce the posted speed limit with the prior approval of the Engineer.

3. Variable Speed Limit Zones

Projects that are within or extends into variable speed limit zones shall be posted according to condition 1 with HWZ-1, HWZ-2, and HWZ-3 signs. No additional "speed limit" signs, (R2-1), shall be posted. Any reduction or increase in speed limits will be controlled by the normal operation of the variable speed limit system.

Upon request, a maximum speed limit of fifty-five (55) mph can be set for the project limits.

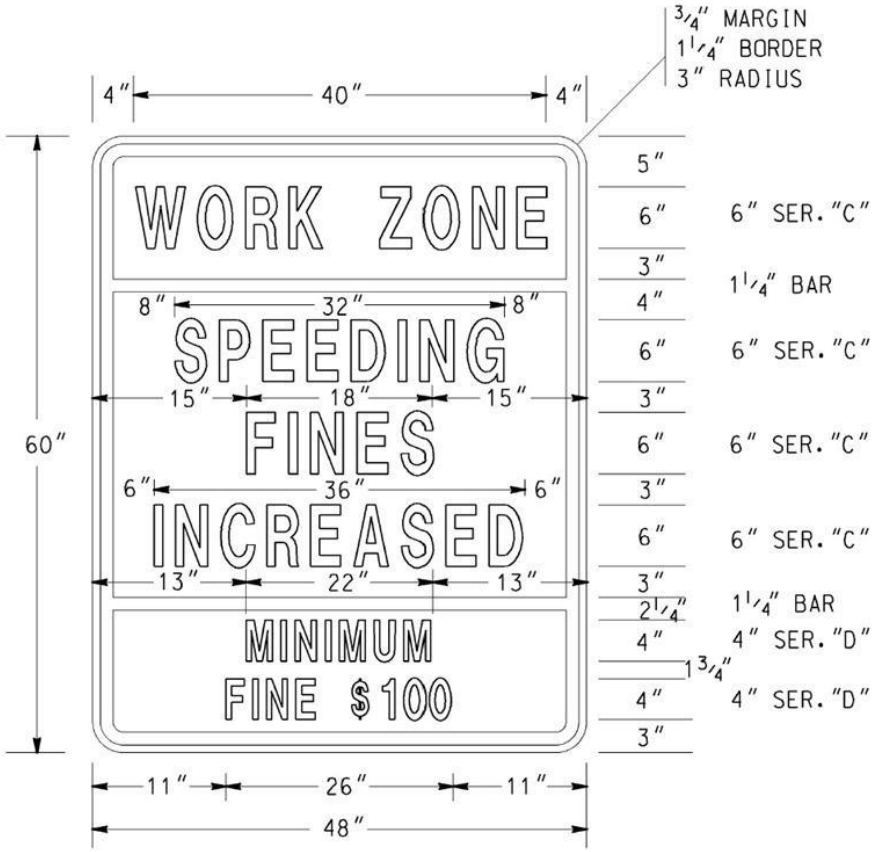

HWZ-2

COLORS
TOP PANEL
LEGEND & BORDER - BLACK (NON-REFL)
BACKGROUND - FLUORESENT ORANGE

MIDDLE & BOTTOM PANELS
LEGEND & BORDER - BLACK
BACKGROUND - WHITE

NOTES:
1. ALL HWZ-2 SIGN PANELS SHALL BE RIGID.
2. THE SIZE OF THE HWZ-2 SIGN SHALL NOT BE REDUCED FOR USE ON TWO-LANE ROADWAYS.

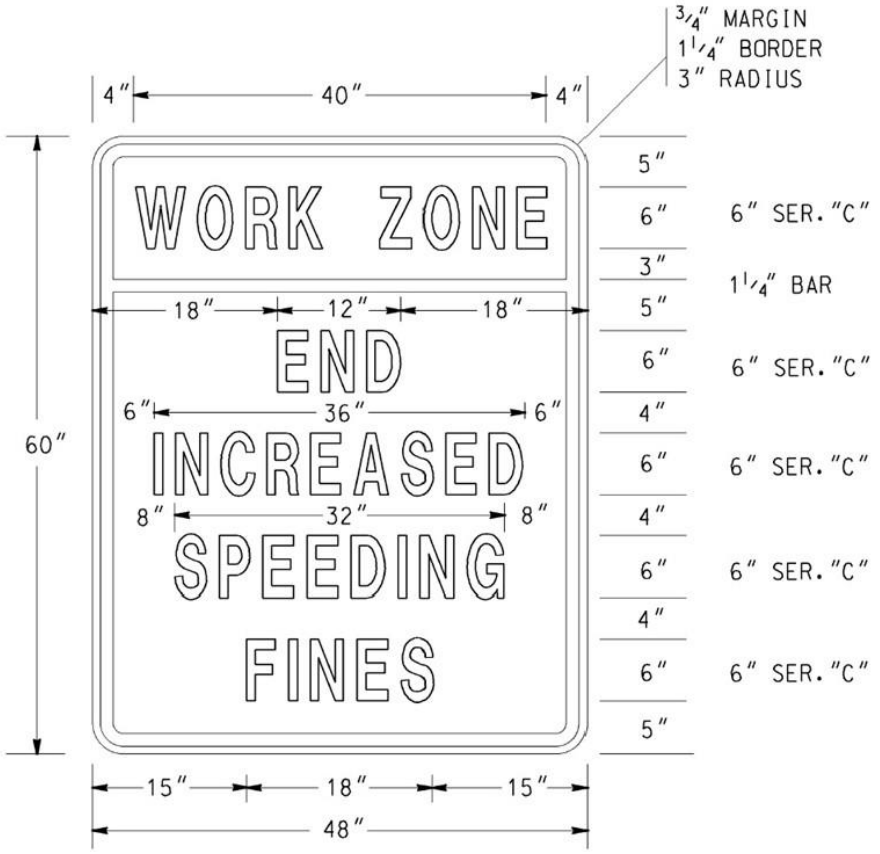

HWZ-3

COLORS

TOP PANEL

LEGEND & BORDER - BLACK (NON-REFL)
BACKGROUND - FLUORESENT ORANGE

BOTTOM PANEL

LEGEND & BORDER - BLACK (NON-REFL)
BACKGROUND - WHITE

NOTES:

1. ALL HWZ-3 SIGN PANELS SHALL BE RIGID.
2. THE SIZE OF THE HWZ-3 SIGN SHALL NOT BE REDUCED FOR USE ON TWO-LANE ROADWAYS.

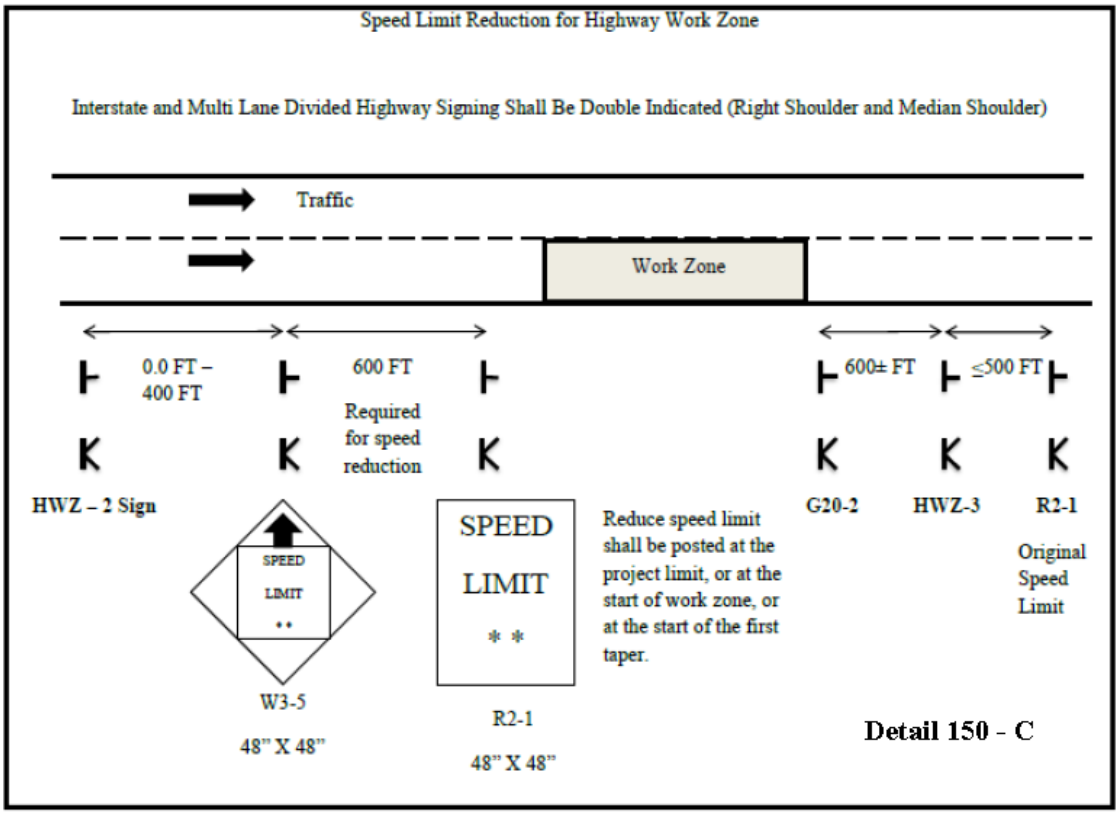
Speed Limit Reduction for Highway Work Zone
Interstate and Multi Lane Divided Highway Signing Shall Be Double Indicated (Right Shoulder and Median Shoulder)
Traffic
Work Zone
0.0 FT – 400 FT
600 FT
Required for speed reduction
600± FT
≤500 FT
HWZ – 2 Sign
SPEED LIMIT
* *
W3-5
48" X 48"
SPEED LIMIT
* *
R2-1
48" X 48"
Reduce speed limit shall be posted at the project limit, or at the start of work zone, or at the start of the first taper.
G20-2
HWZ-3
R2-1
Original Speed Limit
Detail 150 - C

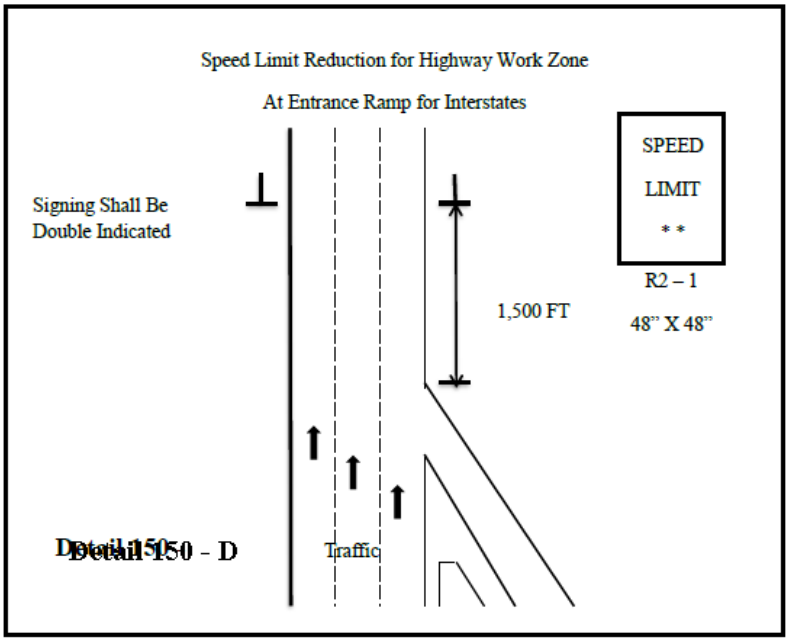
Speed Limit Reduction for Highway Work Zone
At Entrance Ramp for Interstates
Signing Shall Be Double Indicated
1,500 FT
SPEED LIMIT
* *
R2 – 1
48" X 48"
Traffic
Detail 150 - D

C. Installation/Removal of Work Area Signage

No payment will be made for Traffic Control-Lump Sum until the Work has actually started on the project. The installation of traffic control signage does not qualify as the start of work. Advanced warning signs shall not be installed until the actual beginning of work activities. Any permanent mount height signs installed as the work is preparing to start shall be covered until all signs are installed unless all signs are installed within seven (≤ 7) calendar days after beginning installation.

All temporary traffic control devices shall be removed as soon as practical when these devices are no longer needed. When work is suspended for short periods of time, temporary traffic control devices that are no longer appropriate, shall be removed or covered.

All construction warning signs shall be removed within seven (≤ 7) calendar days after time charges are stopped or pay items are complete. If traffic control devices are left in place for more than ten (> 10) calendar days after completion of the Work, the Department shall have the right to remove such devices, claim possession thereof, and deduct the cost of such removal from any monies due, or which may become due, the Contractor.

PUNCH LIST WORK: Portable signs shall be utilized to accomplish the completion of all punch list items. The portable signs shall be removed daily. All permanent mount height signs shall be removed prior to the beginning of the punch list work except "Low/Soft Shoulder" signs and any signs that have the prior written approval of the Engineer to remain in place while the punch list work is inprogress.

Failure to promptly remove the construction warning signs within the seven (7) calendar days after the completion of the Work or failure to remove or cover signs when work is suspended for short periods of time shall be considered as non-performance under Subsection 150.5.01.

150.3.5 Shoulder/Lane Closures

A. Approval/Restrictions

All shoulder closures and lane closures of any type or duration shall have the prior approval of the Engineer.

1. Closure Length

The length of a shoulder closure and a lane closure shall not exceed two (2) miles in length excluding the length of the tapers unless the prior approval of the Engineer has been obtained. The Engineer may extend the length of the closure based upon field conditions; however, the length of a work zone should be held to the minimum length required to accomplish the Work. Shoulder closure and Lane Closures shall not be spaced closer than one mile. The advanced warning signs for the project should not overlap with the advanced warning signs for lane shifts, lane closures, etc.

2. Duration

The first three (3) calendar days of any lane closure shall be signed and marked as per Georgia Standard 9106 "Traffic Control Detail for Lane Closure on Multi-Lane Divided Highway" or Georgia Standard 9107 "Traffic Control Detail for Lane Closure on Multi-Lane Undivided Highway". However, lane closures that exist for a duration longer than three (> 3) calendar days may be signed and marked as per the details in Georgia Standard 9121 "Tapers, Signs, and Markings for Passing Lanes", provided the prior approval of the Engineer is obtained. The approved lane drop shall utilize only the signs and markings shown for the termination end of the lane drop in Georgia Standard 9121. All warning signs in the lane

drop sequence shall be used. Drums may be substituted for the Type I Crystal Delineators at the same spacing.

B. Shoulder Closures

In accordance with MUTCD 6G.07, when paved shoulders, having a width of eight feet (≥ 8') or more are closed, at least one (1) advance warning sign shall be used. The sign(s) should read SHOULDER CLOSED (W21-5a). The signs are only posted on the side with the shoulder closure. Where the downstream end of the shoulder closure extends beyond the distance that can be perceived by road users, a supplementary plaque bearing the message NEXT XX FEET(W16-4P) or MILES (W7-3aP) should be placed below the SHOULDER CLOSED (W21-5a) sign. These signs shall be place 500 feet prior to the shoulder closure. For multi-shoulder closures, the Shoulder Closed sign shall be repeated after two (2) miles at 500 feet prior to the next shoulder closure.

A shoulder closure will require a shoulder taper of (1/3) L (L=merging taper length). Traffic drums shall be used for the taper. Arrow boards are not required.

If positive barriers are used to closed the shoulder, the taper and drums shall be in accordance with Standard 4960, Temporary Barrier (End Treatment Options). The approach end of the barrier taper should be 10:1 or flatter slope.

C. Lane Closure

1. Advance Warning Signs

The advance Warning signs shall be in accordance with MUTCD and Georgia Standard 9106 "Traffic Control Detail for Lane Closure on Multi-Lane Divided Highway" and Georgia Standard 9107 "Traffic Control Detail for Lane Closure on Multi-Lane Undivided Highway".

When the temporary traffic control zone already has advanced warning (W20-1) signs installed the W20-1 signs required for lane closures under Standard 9106 and 9107 should be eliminated.

For Interstate, Limited Access and Multi-lane Divided Highways, an additional Portable Changeable Message Sign (PCMS) shall be placed one (1) mile in advance of a lane closure with a message denoting the appropriate lane closure one (1) mile ahead. No other message shall be displayed on this PCMS. The PCMS shall be placed on the outside shoulder in accordance with Detail 150-B [PCMS]. This is in addition to the other traffic control devices required by Standard 9106.

At the discretion of the Engineer, the Contractor may start placing advance warning signs a half-hour (1/2 hr.) prior to the lane closure.

2. Transition Area – Taper

Drums shall be used on all transition tapers. If traffic drums with retroreflectivity of less than type VI are used for a merge taper that exists into the night, all drums located in the taper shall have, for the length of the taper only, a six inch (6") fluorescent orange (ASTM Type VI, VII, VIII, IX or X) reflectorized top stripe on each drum. The top six inch (6") stripe may be temporarily attached to the drum while in use in a taper. The Engineer may allow the fluorescent orange reflectorized six inch (6") top stripe on each drum in a merging taper to remain in place during daylight hours provided there is a lane closure(s) with a continuous operation that begins during one nighttime period and ends during another nighttime period. All drums that have the six inch (6") top stripe permanently attached shall not be used for any other conditions.

In accordance with MUTCD (6C.08), the minimum length for a merging taper for a lane closure on the travel way shall be as shown in Table 150-1:

TABLE 150-1

Posted Speed Limit, MPH	Lane Width 9 Feet	Lane Width 10 Feet	Lane Width 11 Feet	Lane Width 12 Feet	Maximum Drum Spacing in Tapers, (Feet)
	Minimum Taper Length (L) in Feet				
20	60	70	75	80	20
25	95	105	115	125	25
30	135	150	165	180	30
35	185	205	225	245	35
40	240	270	295	320	40
45	405	450	495	540	45
50	450	500	550	600	50
55	495	550	605	660	55
60	540	600	660	720	60
65	585	650	715	780	65
70	630	700	770	840	70
75	675	750	825	900	75

If site conditions require a longer taper, then the taper shall be lengthened to fit particular individual situations.

The length of shifting tapers should be at least one-half (1/2) L.

Multiple Lane Closures:

a. A maximum of one (1) lane at a time shall be closed with each merge taper.

b. A minimum tangent length of two (≥ 2) L shall be installed between each individual lane closure taper. The tangent length is part of the transition area. Therefore, only traffic drums can be used in the tangent.

3. Activity Area

The activity area consists of a buffer and the work space. Georgia Standard 9106 "Traffic Control Detail for Lane Closure on Multi-Lane Divided Highway" states "Buffer zones of 300' minimum, 500' desirable are required for tangent sections and shall be increased for horizontal or vertical curves due to sight distance considerations"

Georgia Standard 9107 "Traffic Control Detail for Lane Closure on Multi-Lane Undivided Highway" requires a fifty feet (50') buffer. The buffer shall be increased for horizontal or vertical curves due to sight distance considerations"

The channelization devices are spaced at a maximum of eighty feet (80').

4. Termination Area

Georgia Standard 9106 "Traffic Control Detail for Lane Closure on Multi-Lane Divided Highway" requires a 150 feet buffer and a minimum 200 feet downstream taper.

Georgia Standard 9107 "Traffic Control Detail for Lane Closure on Multi-Lane Undivided Highway" requires 150 feet downstream taper.

D. Removal of Lane Closures

To provide the greatest possible convenience to the public in accordance with Section 107, the Contractor shall remove all signs, lane closure markings, and devices immediately when lane closure work is completed or temporarily suspended for any length of time or as directed by the Engineer. All portable signs and portable sign mounting devices shall be removed from the roadway to an area which will not allow the sign to be visible and will not allow the sign or sign mounting device to be impacted by traffic. All devices shall be stored beyond the clear zone or behind positive protection.

E. Exit and Entrance Ramps

On multi-lane highways, where traffic has been shifted to the inside lanes, the exit and entrance ramps shall have drums placed on both sides of the ramp. This requirement will apply to any situation where traffic is shifted to contra flows or inside staging lanes to facilitate reconstruction work in the vicinity of exit and entrance ramps. The temporary ramp taper length should be greater than, or equal to, the existing taper length. Interim EXIT gore signs shall be placed at the ramp divergence. The "EXIT OPEN" sign shown in Figure TA-42 of the MUTCD shall be utilized. For exit ramps, drums spacing shall be decreased to ten feet (10') for 200 feet in advance of the temporary gore, and be decreased to ten feet (10') for the first 100 feet of the temporary gore, and throughout the exit ramp. For on-ramps, drums should be used 200 feet prior to the ramp and end 100 feet past the merge taper. The drum spacing for the on ramp may be decreased but should not obstruct the view of the drivers i.e. for the ramp vehicles.

150.3.6 Traffic Pacing Method

A. Pacing Of Traffic

With prior approval from the Engineer, traffic may be paced allowing the Contractor up to twenty (20) minutes maximum to work in or above all lanes of traffic for the following purposes:

1. Placing bridge members or other bridge work.

2. Placing overhead sign structures.

3. Other work items requiring interruption of traffic.

The Contractor shall provide a uniformed law enforcement officer with patrol vehicle and blue flashing light for each direction of pacing. The law enforcement officer, Engineer, and flaggers at ramps shall be provided with a radio which will provide continuous contact with the Contractor.

When ready to start the work activity, the law enforcement vehicle will act as a pilot vehicle slowing the traffic, thereby providing a gap in traffic allowing the Contractor to perform the Work. Any on-ramps between the pace and the work area shall be blocked during pacing of traffic, with a flagger properly dressed and equipped with a Stop/Slow paddle. Each ramp should be opened after the law enforcement vehicle has passed.

Pilot vehicles shall travel at a safe pace speed The Contractor shall provide a vehicle to proceed in front of the law enforcement vehicle and behind the other traffic in order to inform the Contractor's work force when all vehicles have cleared the area.

Traffic should not be permitted to stop during pacing unless approved by the Engineer.

B. Methods of Signing For Traffic Pacing

At a point not less than 1,000 feet in advance of the beginning point of the pace, the Contractor shall place a portable changeable message sign with the message "TRAFFIC SLOWED AHEAD SHORT DELAY".

150.3.7 Flagging Operations

A. Flaggers

Flaggers shall be provided as required to handle traffic, as specified in the Plans or Special Provisions, and as required by the Engineer.

B. Flagger Certification

All flaggers shall meet the requirements of the MUTCD and shall have received training and a certificate upon completion of the training from one of the following organizations:

National Safety Council
American Traffic Safety Services Association (ATSSA)

On-line classes are not accepted.

Failure to provide certified flaggers as required above shall be reason for the Engineer suspending work involving the flagger(s) until the Contractor provides the certified flagger(s). Flaggers shall have proof of certification and valid identification (photo I.D.) available any time they are performing flagger duties.

C. Flagger Appearance and Equipment

Flaggers shall wear Performance Class 3 or better high-visibility clothing. Flagger stations shall be illuminated at night according to MUTCD (6F.82). They shall use a Stop/Slow paddle meeting the requirements of the MUTCD (6E.03) for controlling traffic. The Stop/Slow paddles shall have a shaft length of seven feet (≥ 7') minimum. The Stop/Slow paddle shall be retroreflectorized for both day and night usage. In addition to the Stop/Slow paddle, a flagger may use a flag as an additional device to attract attention. This flag shall meet the minimum requirements of the MUTCD (6E.03). The flag shall, as a minimum, be twenty-four inches (≥ 24") square and red or red/orange in color.

D. Flagger Warning Signs

Signs for flagger traffic control shall be placed in advance of the flagging operation, in accordance with the MUTCD and Georgia Standard 9102 "Traffic Control Detail for Lane Closure on Two-Lane Highway". In addition, signs at regular intervals, warning of the presence of the flagger shall be placed beyond the point where traffic can reasonably be expected to stop under the most severe conditions for that day'swork.

E. Pilot Vehicle Requirements

Pilot vehicles should be required during placement of bituminous surface treatment or asphaltic concrete on two-lane roadways unless otherwise specified. Pilot vehicles shall meet the requirements of the MUTCD (6C.13).

F. Automated Flagger Assistance Devices

The Contractor may request, in writing, the use of Automated Flagger Assistance Devices (AFAD). The equipment shall meet the requirements of MUTCD (6E.04). As a part of this request, the Contractor shall also submit an alternate temporary traffic control plan in the event of a failure of the AFAD. Any alternate plan that requires the use of flaggers shall include the use of certified flaggers. The Contractor shall obtain the approval of the Engineer before the use of any AFAD will be permitted.

G. Portable Temporary Traffic Control Signals

The Contractor may request, in writing, the substitution of portable temporary traffic control signals for flaggers on two-lane two-way roadways provided the temporary signals meets the requirements of the MUTCD, Section 647, and subsection 150.2.11. As a part of this request, the Contractor shall also submit an alternate temporary traffic control plan in the event of a failure of the signals. Any alternate plan that requires the use of flaggers shall include the use of certified flaggers. The Contractor shall obtain the approval of the Engineer before the use of any portable temporary traffic control signals will be permitted.

150.3.8 Traffic Signals

A. Responsibility/Cost

If the sequence of operations, staging, or the temporary traffic control plan requires the relocation or shifting of any components of an existing traffic signal system then any work on these traffic signals will be considered as part of Traffic Control – Lump Sum.

B. Law Enforcement Officer Requirement

In accordance with Georgia law § 40-6-20, law enforcement officers shall be used to regulate and maintain traffic control at functioning signalized intersections when lane closures or traffic shifts block or restrict movements causing interference with road user flows and will not allow the activated traffic signal to guide the traffic through the signal site.

150.3.9 Mobile Operations

A mobile operation is defined by a minimum speed of three (3) mph. When pavement markings (centerlines, lane lines, and edge lines) are applied in a continuous operation by moving vehicles and equipment, the following minimum equipment and warning devices shall be required. These devices and equipment are in addition to the minimum requirements of the MUTCD.

All vehicles shall be equipped with the official slow moving vehicle symbol sign. All vehicles shall have a minimum of two (2) flashing or rotating beacons visible in all directions. All protection vehicles shall have an arrow panel mounted on the rear. All vehicles requiring an arrow panel shall have, as a minimum, a Type B panel. All vehicle mounted signs shall be mounted with the bottom of the sign a minimum height of forty-eight inches (48") above the pavement. All sign legends shall be covered or removed from view when work is not in progress.

The lead vehicle may be a separate vehicle or the work vehicle applying the pavement markings may be used as the lead vehicle. The lead vehicle shall have an arrow panel mounted so that the panel is easily visible to oncoming (approaching) traffic. The arrow panel should operate in the caution mode.

The work vehicle(s) applying markings shall have an arrow panel mounted on the rear. The arrow panel should typically operate in the caution mode. The work vehicle placing cones shall follow directly behind the work vehicle applying the markings.

A protection vehicle shall follow the last work vehicle at all times and shall be equipped with a truck mounted attenuator that shall be certified for impacts not less than sixty-two (62) mph in accordance with MASH/NCHRP350 Test Level Three (3).

150.3.10 Pavement Markings

A. General

Full pattern pavement markings in conformance with Section 3A and 3B, except 3B.02, of the MUTCD are required on all courses before the roadway is opened to traffic, unless noted in this section. No passing zones shall be marked to conform to Subsection 150.3.10.D.1.b.. During construction and maintenance activities on all highways open to traffic, both existing markings and markings applied under this Section shall be fully maintained until Final Acceptance. If the pavement markings are, or become, unsatisfactory in the judgment of the Engineer due to wear, weathering, or construction activities, they shall be restored immediately.

Markings on the final surface course, which must be removed, shall be a removable type. The Contractor will be permitted to use paint, thermoplastic, or tape on pavement which is to be overlaid as part of the project, unless otherwise directed by the Engineer. Partial (skip) reflectorization (i.e. reflectorizing only a portion of a stripe) will not be allowed.

1. Resurfacing Projects

   Pavement markings shall be provided on all surfaces that are placed over existing markings. Interim and final markings shall conform in type and location to the markings that existed prior to resurfacing unless changes or additions are noted in the Contract. The replacement of parking spaces will not be required unless a specific item or note has been included in the Contract. Any work to make additions to the markings that existed prior to resurfacing is to be considered as extra work.

2. Widening And Reconstruction Projects

   If the lane configuration is altered from the preconstruction layout then pavement markings will be as required by the plans or the Engineer.

3. New Location Construction Projects

   Pavement marking plans will be provided.

B. Installation and Removal of Pavement Markings

1. Installation

   All pavement markings, both interim and permanent, shall be applied to a clean surface. The Contractor shall furnish the layout and preline the roadway surface for the placement of pavement markings applied as part of the temporary traffic control plan. All interim marking tape and RPM's on the final surface shall be removed prior to the placement of the final markings.

   The Contractor shall sequence the work in such a manner as to allow the installation of markings in the final lane configuration at the earliest possible stage of the work.

2. Removal

   Markings no longer applicable shall be removed in accordance with Section 656.
   The elimination of conflicting pavement markings by overpainting with unapproved paint or any type of liquid asphalt is not acceptable.

3. Intermediate Surface

   Interim markings shall be removed by methods that will cause minimal damage to the pavement surface, while also ensuring that traveling public will not be confused or misdirected by any residual markings remaining on the intermediate surface. The use of approved black-out tape and black-out paint (manufactured for the sole purpose of covering existing pavement markings) may be permitted on some interim surfaces, provided the results are satisfactory to the Engineer.

4. Final Surface

   No interim paint or thermoplastic markings will be permitted on any final surface unless the interim markings are in alignment with the location of the permanent markings and the interim marking will not interfere or adversely affect placement of the permanent markings. The proposed method of removal for layout errors that require markings to be removed from the final surface shall have the prior approval of the Engineer. Any damage to the final pavement surface caused by the pavement marking removal process shall be repaired at the Contractor's expense by methods acceptable and approved by the Engineer. Section 400 shall apply when corrective measures are required. The use of black-out tape or black-out paint will not be permitted under any circumstance to correct layout errors on any final surface.

   Traffic shifts that are done on the final surface shall be accomplished using interim traffic marking tape that can be removed without any blemishing of the final surface. Interim traffic marking tape shall be used on any of the following final surfaces; asphaltic concrete, Portland cement concrete, and bridge deck surfaces. The contractor may propose alternate traffic markings and removal methods on the final surface. Submitted proposals shall include the type of material, method of removal and a cost comparison to the traffic marking tape method. Prior to any approval, the contractor shall field demonstrate to the satisfaction of the Engineer that the proposed traffic markings can be removed without any blemishing of the final surface. If the proposal is determined to be acceptable, a supplemental agreement will be executed prior to the installation of the proposed alternate traffic markings. The supplemental agreement shall denote the type of

traffic marking materials, method of removal and any cost and/or time savings to the Department. The Department will not consider or participate in any cost increase that may result from implementing the proposed alternate method.

5. Pay Factor Reduction for Asphaltic Concrete Final Surfaces

When the correction of an error in the layout of the final pavement markings requires the final surface to be grounded, blemished, scarred, or polished the pay factor shall be reduced to 0.95 for the entire surface area of the final topping that has a blemish, polished or a scarred surface. The reduced pay factor shall not be confined to only the width and length of the stripe or the dimensions of the blemished areas, the whole roadway surface shall have the reduced pay factor applied. The area of the reduced pay factor shall be determined by the total length and the total width of the roadway affected. If the affected area is not corrected, the reduction in pay shall be deducted from the final payment for the topping layer of asphaltic concrete. The Engineer shall make the final determination whether correction or a reduced pay factor is acceptable.

The eradication of pavement markings on intermediate and final concrete surfaces shall be accomplished by a method that does not grind, polish, or blemish the surface of the concrete. The method used for the removal of the interim markings shall not spall chip the joints in the concrete and shall not damage the sealant in the joints. Any joint or sealant repairs shall be included in the bid price for Traffic Control-Lump Sum. The proposed method of removal shall have the prior approval of the Engineer.

Failure to promptly remove conflicting or non-applicable pavement markings shall be considered as non-performance under Subsection 150.5.01.

6. Preparation and Planning For Traffic Shifts

When shifting of traffic necessitates removal of centerline, lane lines, or edge lines, all such lines shall be removed prior to, during, or immediately after any change so as to present the least interference with traffic. Interim traffic marking tape shall be used as a temporary substitute for the traffic markings being removed.

Before any change in traffic lane(s) alignment, marking removal equipment shall be present on the project for immediate use. If marking removal equipment failures occur, the equipment shall be repaired or replaced (including leasing equipment if necessary), so that the removal can be accomplished without delay.

Except for the final surface, markings on asphaltic concrete may be obliterated by an overlay course, when approved by the Engineer. When an asphaltic concrete overlay is placed for the sole purpose of eliminating conflicting markings and the in place asphaltic concrete section will allow, said overlay will be eligible for payment only if designated in the Plans. Overlays to obliterate lines will be paid for only once and further traffic shifts in the same area shall be accomplished with removable markings. Only the minimum asphaltic concrete thickness required to cover lines will be allowed. Excessive build-up will not be permitted. When an overlay for the sole purpose of eliminating conflicting markings is not allowed, the markings no longer applicable shall be removed in accordance with Section 656.

C. Raised Pavement Markers

Retroreflective raised pavement markers (RPMs) should be placed as listed below for all asphaltic concrete pavements before the roadway is open to traffic, unless noted this section. On the final surface, RPM's shall be placed according to the timeframes specified in Subsection 150.3.10.D for full pattern pavement markings. When Portland Cement Concrete is an intermediate or final surface and is open to traffic, one (1) calendar day is allowed for cleaning and drying before the installation of RPMs is required.

Raised pavement markers are not allowed on the right edge lines under any situation.

Retroreflective raised pavement markers (RPMs) should be placed and/or maintained on intermediate pavements surfaces on all highways that are open to traffic. This includes all resurfacing projects along with widening and reconstruction projects. The RPMs shall be placed as follows:

1. Supplementing Lane Lines:

   a. Eighty foot (80') center on skip lines with curvature less than three degrees. (Includes tangents)

   b. Forty foot (40') centers on solid lines and all lines with curvature between three degrees and six degrees.

   c. Twenty foot (20') centers on curves over six degrees.

   d. Twenty foot (20') centers on lane transitions or shifts.

2. Supplementing Ramp Gore Lines:

   a. Twenty foot (20') centers, two each, placed side by side.

3. Other Lines:

   a. As shown on the plans or directed by the Engineer.

D. Exceptions for Interim Markings

Some exceptions to the time of placement and pattern of markings are permitted as noted below; however, full pattern pavement markings are required for the completed project.

1. Two-Lane, Two-Way Roadways

   a. Skip Lines

      If used, interim temporary tape or paint skip (broken) stripe may only be used for a maximum of three (3) calendar days. The stripes shall be at least two feet (> 2') long with a maximum gap of thirty-eight feet (≤ 38'). On curves greater than six degrees (>6^0), a one-foot (1') stripe with a maximum gap of nineteen feet (≤ 19') shall be used. In lane shift areas, solid lines will be required.

      Interim raised pavement markers may be substituted for the interim skip (broken) stripes. If raised pavement markers are substituted for the two foot (2') interim skip stripe, three (3) markers spaced at equal intervals over a two feet (2') distance will be required. No separate payment will be made if the interim raised pavement markers are substituted for interim skip lines.

      Interim raised pavement markers shall be retro-reflective, shall be the same color as the pavement markers for which they are substituted, and shall be visible during daytime.

      The type of interim marker and method of attachment to the pavement shall be approved by the Office of Materials and Testing but in no case will the markers be attached by the use of nails. Flexible reflective markers, Type 14 or Type 15, may be used for a maximum of three (3) calendar days as an interim marker. Any flexible reflective markers in use shall be from the QPL-76.

      The interim raised pavement markers shall be maintained until the full pattern pavement markings are applied. At the time full pattern markings are applied the interim raised markers shall be removed in a manner that will not interfere with application of the full pattern pavement markings.

b. No Passing Zones Two-Lane, Two-Way Roadways

Passing zones shall be re-established in the locations existing prior to resurfacing. No changes to the location of passing zones shall be done without the written approval of the Engineer. For periods not to exceed three (3) calendar days where interim skip centerlines are in place, no-passing zones shall be identified by using post or portable mounted DO NOT PASS regulatory signs (R4-1) twenty-four inches by thirty inches (24" x 30") at the beginning and at intervals not to exceed one-half (≤½) mile within each no-passing zone. A post or portable mounted PASS WITH CARE regulatory sign (R4-2) twenty-four inches by thirty inches (24" x 30") shall be placed at the end of each no-passing zone. Post mounted signs shall be placed in accordance with the MUTCD. Portable signs shall be secured in such a manner to prevent misalignment and minimize the possibility of being blown over by weather conditions or traffic.

On new location projects and on projects where either horizontal or vertical alignments has been modified, the location of No-Passing Zones will be identified by the Engineer.

c. Edge lines

- Bituminous Surface Treatment Paving

  Edge lines will not be required on intermediate surfaces (including asphaltic concrete leveling for bituminous surface treatment paving) that are in use for a period of less than sixty (<60) calendar days except at bridge approaches, on lane transitions, lane shifts, and in such other areas as determined by the Engineer. On the final surface, edge lines shall be placed within thirty (≤30) calendar days of the time that the final surface was placed.

- All Other Types of Pavement

  Edge lines will not be required on intermediate surfaces that are in use for a period of less than thirty (<30) calendar days except at bridge approaches, on lane transitions, lane shifts, and in such other areas as determined by the Engineer. On the final surface, edge lines shall be placed within fourteen (≤ 14) calendar days of the time that the surface was placed.

2. Multi-Lane Highways – With No Paved Shoulder(s) or Paved Shoulder(s) Four Feet or Less (≤4')

a. Undivided Highways (Includes Paved Center Turn Lane)

- Centerlines and No-Passing Barrier-Full Pattern centerlines and no-passing barriers shall be restored before opening to traffic.

- Lane lines- Interim skip (broken) stripe as described in Subsection 150.3.10.D.1.a. may be used for periods not to exceed three (≤ 3) calendar days. Skip lines are not permitted in lane shift areas. Solid lines shall be used.

- Edge lines- Edge lines shall be placed on intermediate and final surfaces within three (3) calendar days of obliteration.

b. Divided Highways (Grass or Raised Median)

- Lane lines- Full pattern skip stripe shall be restored before opening to traffic. Skip lines are not permitted in lane shift areas. Solid lines shall be required.

- Centerline/Edge line- Solid lines shall be placed on intermediate and final surfaces within three calendar days of obliteration.

3. Limited Access Roadways and Roadways with Paved Shoulders Greater Than Four Feet (> 4')

   a. Same as Subsection 150.3.10.D.2 except as noted in (b) below.

   b. Edge lines-

      - Asphaltic Concrete Pavement- Edge lines shall be placed on intermediate and final surfaces prior to opening to traffic.

      - Portland Cement Concrete Pavement- Edge lines shall be placed on any surface open to traffic no later than one calendar day after work is completed on a section of roadway. All water and residue shall be removed prior to daily striping.

4. Ramps for Multi-Lane Divided Highways

   A minimum of one solid line edge stripe shall be placed on any intermediate surface of a ramp prior to opening the ramp to traffic. The other edge stripe may be omitted for a maximum period of three (3) calendar days on an intermediate surface. Appropriate channelization devices shall be spaced at a maximum of twenty-five feet (25') intervals until the other stripe has been installed.

   The final surface shall have both stripes placed prior to opening the ramp to traffic.

5. Miscellaneous Pavement Markings

   a. Final Surface

      School zones, railroads, symbols, words and other similar markings shall be placed on final surfaces conforming to Section 652 within fourteen (14) calendar days of completion of the final surface. Final markings shall conform to the type of pay item in the plans. When no pay item exists in the plans the final markings shall conform to Section 652 for painted markings.

   b. Intermediate Surface

      Intermediate surfaces that will be in use for more than forty-five (45) calendar days shall have the miscellaneous pavement markings installed to conform to the requirement of Section 652. Under Subsection 150.6, Special Conditions, or as directed by the Engineer these markings may be eliminated.

   c. Stop Line

      All stop signs and traffic signals shall have temporary twelve inch (12") stop lines placed in accordance with MUTCD (3B.16) on all surfaces prior to opening to traffic. Temporary tape can be used.

150.3.11 Differences In Elevations Between Travel Lanes And Shoulders

All time frames and requirements may be changed with the Engineer's approval.

A. Differences in Elevations

Difference in elevations due to construction between travel lanes and/or shoulders within the clear zone should be limited to the following:

1. Difference of two inches (≤ 2") or less between adjacent travel lanes should remain for a maximum period of fourteen (14) calendar days.

2. Difference of two inches (≤2") or less between adjacent travel lane and paved shoulder should remain for a maximum of thirty (30) calendar days. Traffic control devices shall be in accordance with Detail 150-G.

3. Difference of greater than two inches (> 2") is permitted for continuous operations. Traffic control devices shall be in accordance with Detail 150-E.

4. Difference of greater than two inches (> 2") between travel lanes and/or shoulders for non-continuous operations will not be allowed for more than a twenty-four (24) hour period. For the first twenty-four (24) hours, traffic control shall be in accordance with Detail 150-E. After twenty-four (24) hours the section should be healed according to Detail 150 – H. This condition can exist for a maximum sixty (60) calendar days.

   a. A single length of area that does not exceed 1000 feet total length may be left open as a startup area for periods not to exceed forty-eight (48) hours provided the Contractor can demonstrate the ability to complete the Work in a proficient manner. Prior approval of the Engineer shall be obtained before any startup area may be allowed.

   b. For cement stabilized base, work adjacent to the travel lane and/or shoulders shall be healed as per Detail 150-H within forty-eight (48) hours after the seven (7) calendar day curing period is complete for each section placed. During the placement and curing period, traffic control shall be in accordance Detail 150-E.

Failure to meet these requirements shall be considered as non-performance of Work under Subsection 150.5.01.

B. Healed Section

Healed section and traffic control devices should be placed in accordance with Detail 150-H. If crushed stone materials are used to provide a healed section no separate payment will be made for the material used to heal any section. The Contractor may submit a plan to utilize existing pay items for crushed stone provided the plan clearly demonstrates that the materials used to heal an area will be incorporated into the work with minimal waste. Handling and hauling of any crushed stone used to heal shall be kept to a minimum. The Engineer shall determine if the crushed stone used to heal meets the specifications for gradation and quality when the material is placed in the final location.

C. Emergency Situations

Inclement weather, traffic accidents, and other events beyond the control of the Contractor may prevent the work from being completed as required above. The Contractor shall notify the Engineer in writing stating the conditions and reasons that have prevented the Contractor from complying with the time limitations. The Contractor shall also outline a plan detailing immediate steps to complete the work. Failure to correct these conditions on the first calendar day that conditions will allow corrective work shall be considered as non-performance of Work under Subsection 150.5.01.

D. Plating

Plating for drainage structures, utility facilities, etc. is prohibited on the interstates. Plating on State Routes and secondary roads will required the prior approval of the project engineer. Steel plates shall not be used on highways with a posted speed greater than forty-five (45) mph. The plate shall completely cover the pavement cut or excavation. The plate shall be adequately secured and shall provide a safe and reasonable transition to the adjoining roadway surface. An asphalt wedge can be used to provide a smooth transition over the plate(s).Temporary traffic control warning signs W8-24 shall be posted in advance warning motorist about plates in roadway in accordance with the MUTCD. Plating should not remain in place for more than four (4) calendar days.

E. Asphaltic Concrete Resurfacing Projects

1. Shoulder Construction Included as a Part of the Contract

When the placement of asphaltic concrete materials creates a difference in elevation greater than two inches (> 2") between the earth shoulder (grassed or un-grassed) and the edge of travel lane or between the earth shoulder and a paved shoulder that is less than four feet (< 4') in width, the Contractor shall place and maintain drums in accordance with the requirements of Subsection 150.2.04.B.3. When the edge of the paved surface is tapered with a safety edge, drums may be spaced at two (2) times the speed limit in MPH. Drums shall remain in place and be maintained until the difference in elevation has been eliminated by the placement of the appropriate shoulder materials.

2 Shoulder Construction Not Included as a Part of the Contract

When the placement of asphaltic concrete materials creates a difference in elevation greater than two inches (> 2") between the earth shoulder (grassed or un-grassed) and the edge of travel lane or between the earth shoulder and a paved shoulder that is less than four feet (< 4') in width, the Contractor shall notify the Engineer, in writing, when the resurfacing work including all punch list items has been completed.

Drums spaced at twenty foot (20') intervals. **Note**: If the travel way width is reduced to less than ten feet (< 10') by the use of drums, vertical panels shall be used in lieu of drums.	Location of drums when Elevation Difference exceeds four inches (> 4")

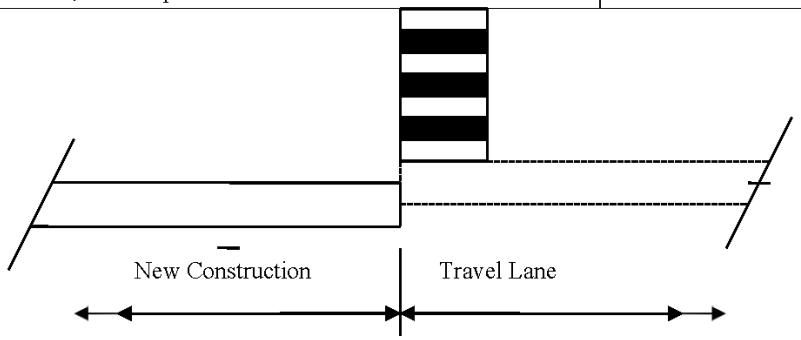

ELEVATION DIFFERENCE GREATER THAN FOUR INCHES (> 4")

DETAIL 150-E

Drums spaced at forty foot (40') intervals.	Location of drums when Elevation Difference is greater than two inches (> 2") to four inches (4")

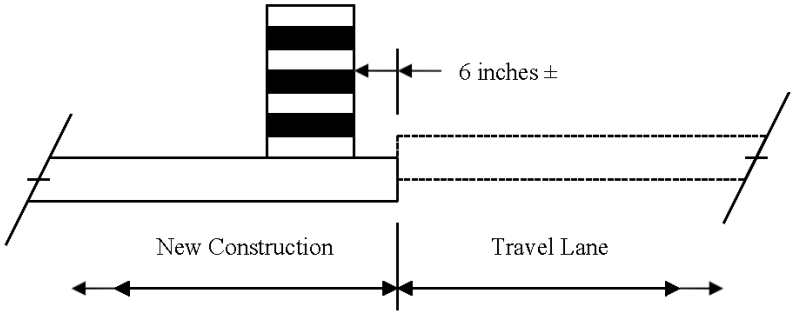

ELEVATION DIFFERENCE GREATER THAN TWO INCHES (> 2") TO FOUR INCHES (4")

DETAIL 150-F

Drums spaced at eighty foot (80') intervals.	Location of drums when Elevation Difference is two inches (≤ 2") or less.

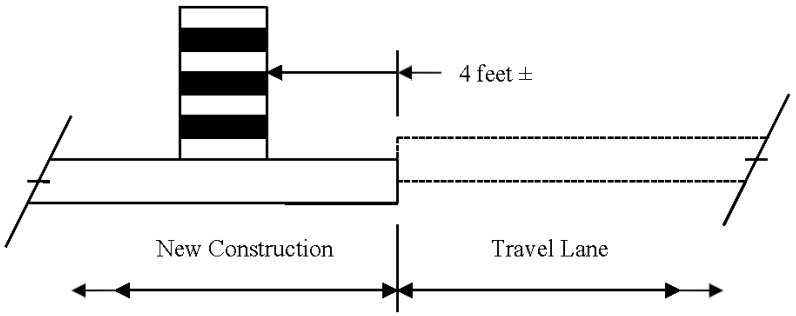

ELEVATION DIFFERENCE OF TWO INCHES (≤ 2") OR LESS

DETAIL 150-G

Location of drums immediately after completion of healed sections spaced at 40 foot (40') intervals	Healed Section

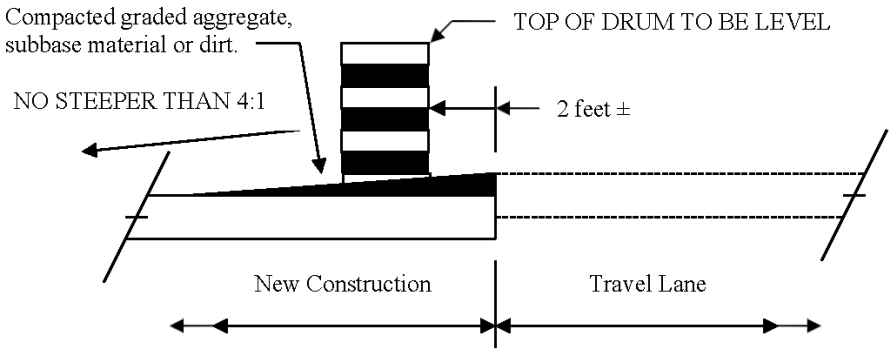

HEALED SECTION

DETAIL 150-H

150.3.12 Work Zone Law Enforcement

Work zone law enforcement consists of utilizing a uniformed law enforcement officer equipped with patrol vehicle and blue flashing lights to enforce traffic laws in construction work zones and the administration of this service. Payment for work zone law enforcement will be made only for the utilization in work zones during lane closures, traffic pacing, or other activities that occur within travel lanes. The Contractor will be responsible for negotiating a rate of reimbursement and making reimbursement to that law enforcement agency.

The Contractor will be responsible for coordinating and scheduling the utilization of the work zone law enforcement. The Engineer may require the use of work zone law enforcement at specific times and locations.

150.4 Measurement

150.4.1 Traffic Control Items

A. Traffic Control

When listed as a pay item in the Proposal, payment will be made at the lump sum price bid, which will include all traffic control not paid for separately, and will be paid as follows:

When the first Construction Report is submitted, a payment of twenty-five percent (25%) of the lump sum price will be made. For each progress payment thereafter, the total of the Project percent complete shown on the last pay statement plus twenty-five percent (25%) will be paid (less previous payments), not to exceed one hundred percent (100%).

When no payment item for Traffic Control-Lump Sum is shown in the Proposal, all of the requirements of Section 150 and the Temporary Traffic Control Plan shall be in full force and effect. The cost of complying with these requirements will not be paid for separately, but shall be included in the overall bid submittal.

B. Changeable Message Sign, Portable

Portable changeable message sign will be measured as specified in Section 632.

C. Flashing Beacon Assembly

Flashing beacon assemblies will be measured as specified in Section 647.

D. Pavement Markings

Pavement markings will be measured as specified in Section 150.

E. Portable Impact Attenuators

Each portable impact attenuator will be measured by the unit/array which shall include all material components, hardware, incidentals, labor, site preparation, and maintenance, including spare parts recommended by the manufacturer for repairing accident damage. Each unit will be measured only once regardless of the number of locations installed, moves required, or number of repairs necessary because of traffic damage. Upon completion of the project, the units shall be removed and retained by the Contractor.

F. Signs

When shown as a pay item in the contract, interim special guide signs will be paid for as listed below. All other regulatory, warning, and guide signs, as required by the Contract, will be paid for under Traffic Control Lump Sum or included in the overall bid submitted.

1. Interim ground mounted or interim overhead special guide signs will be measured for payment by the square foot. This payment shall be full compensation for furnishing the signs, including supports as required, erecting, illuminating overhead signs, maintaining, removing, re-erecting, and final removal from the Project. Payment will be made only one time regardless of the number of moves required.

2. Remove and reset existing special guide signs, ground mount or overhead, complete, in place, will be measured for payment per each. Payment will be made only one time regardless of the number of moves required.

3. Modify special guide signs, ground mount or overhead, will be measured for payment by the square foot. The area measured shall include only that portion of the sign modified. Payment shall include materials, removal from posts or supports when necessary, and remounting as required.

G. Temporary Audible Information Device

Temporary audible information devices are measured as the actual number furnished and installed in accordance with the manufacturer's recommendations, which shall include all necessary materials, equipment, labor, site preparation, maintenance and removal. Each temporary audible information device will be paid for only one time regardless of the number of times it's reused during the duration of The Work. These devices shall remain the property of the Contractor.

H. Temporary Barrier

Temporary barrier shall be measured as specified in Sections 620.

I. Temporary Curb Cut Wheelchair Ramps

Temporary curb cut wheelchair ramps are measured as the actual number formed and poured, complete and accepted, which shall include all necessary materials, equipment, labor, site preparation, maintenance and removal. No additional payment will be made for sawing existing sidewalk and removal and disposal of removed material for temporary wheelchair ramp construction. No additional payment will be made for constructing the detectable warning surface.

J. Temporary Guardrail Anchorage, Type 12

Temporary guardrail anchorage- type 12 will be measured by each assembly, complete in place and accepted according to the details shown in the plans, which shall also include the additional guardrail and appurtenances necessary for transition and connection to temporary concrete barrier. Payment shall include all necessary materials, equipment, labor, site preparation, maintenance and removal.

K. Temporary Walkways with Detectable Edging

Temporary walkways with detectable edging will be measured in linear feet (meters), complete in place and accepted, which shall include all necessary materials, equipment, labor, site preparation, temporary pipes, passing spaces, maintenance and removal. Excavation and backfill are not measured separately for payment. No payment will be made for temporary walkways where existing pavements or existing edging (that meets the requirements of MUTCD) are utilized for the temporary walkway. Payment for temporary detectable edging, including approved barriers and channelizing devices, installed on existing pavement shall be included in Traffic Control-Lump Sum.

L. Traffic Signal Installation- Temporary

Temporary traffic signal installation will be measured as specified in Section 647.

M. Work Zone Law Enforcement

When work zone law enforcement is shown as a pay item, work zone law enforcement will be measured for payment by the hour. The Contractor shall provide a daily work record containing the actual number of hours charged by the law enforcement officer. The daily work record shall be complied on a form provided by the Department, signed by the law enforcement officer, signed by the Contractor's Worksite Traffic Control Supervisor attesting that the law enforcement was utilized during the time recorded, and then submitted to the Engineer.

Work zone law enforcement will be measured for payment by the hour up to the maximum number of hours included in the contract. The Engineer may at his discretion increase the maximum number of hours.

Payment shall be full compensation for reimbursing the law enforcement agency, and for all cost incurred by the Contractor in coordinating, scheduling, and administering the item work zone law enforcement.

If no work zone law enforcement pay item is included in the contract, then all work zone law enforcement cost shall be included in Traffic Control – Lump Sum.

150.5 Payment

When shown in the Schedule of Items in the Proposal, the following items will be paid for separately. Payment will be made under:

Item No. 150	Traffic control -	Lump sum
Item No. 150	Traffic control, solid traffic stripe inch, (color)	Per linear mile
Item No. 150	Traffic control, skip traffic stripe Inch, (color)	Per linear mile
Item No. 150	Traffic control, solid traffic stripe, thermoplastic 24 inch, color	Per linear mile
Item No. 150	Traffic control, raised pavement markers –all types	Per each
Item No. 150	Remove and reset, existing special guide signs, overhead, complete-in-place	Per each
Item No. 150	Temporary walkways with detectable edging	Per linear foot
Item No. 150	Temporary curb cut wheelchair ramps	Per each
Item No. 150	Temporary audible information device	Per each
Item No. 150	Single lane closure	Per each
Item No. 150	Multilane closure	Per each
Item No, 150	Work Zone Law Enforcement	Per hour

150.5.1 Enforcement and Adjustments

The safe passage of pedestrians and traffic through and around the temporary traffic control zone, while minimizing confusion and disruption to traffic flow, shall have priority over all other Contractor activities. Continued failure of the Contractor to comply with the requirements of Section 150 - Traffic Control will result in non-refundable deductions of monies from the Contract as shown in this Subsection for non-performance of Work.

Failure of the Contractor to comply with this Specification shall be reason for the Engineer suspending all other work on the Project, except erosion control and traffic control, taking corrective action as specified in Section 105, and/or withholding payment of monies due to the Contractor for any work on the Project until traffic control deficiencies are corrected. These other actions shall be in addition to the deductions for non-performance of traffic control.

SCHEDULE OF DEDUCTIONS FOR EACH CALENDAR DAY OF DEFICIENCIES OF TRAFFIC CONTROL INSTALLATION AND/OR MAINTENANCE		
ORIGINAL TOTAL CONTRACT AMOUNT		
From More Than	**To and Including**	**Daily Charge**
$0	$100,000	$250
$100,000	$1,000,000	$650
$1,000,000	$5,000,000	$1,300
$5,000,000	$20,000,000	$2,000
$20,000,000	$40,000,000	$2,600
$40,000,000	$----------	$4,000

April 26, 2017

DEPARTMENT OF TRANSPORTATION
STATE OF GEORGIA

SPECIAL PROVISION

PROJECT: STP00-3223-00(002) & BRMLB-3223-00(006)
BIBB COUNTY
P.I. NO: 342080 & 351095

SECTION 150 – TRAFFIC CONTROL

ADD the following:

150.6 SPECIAL CONDITIONS:

A. The normal workday for this project shall be 8:00 AM to 5:00 PM and the normal work week shall be Monday through Friday. The County will consider extended workdays or work weeks upon three (3) day advance written request to the County by the Contractor on a case by case basis. No work will be allowed on County furlough days or national holidays (i.e. Memorial Day, July 4th, Labor Day, etc.) and the associated weekends with these holidays.

B. LANE CLOSURES:

The Contractor shall not install lane closures, pace traffic or move equipment or materials that interferes with traffic on Jeffersonville Road between the hours of 6:00 am to 9:00 am and 4:00 pm to 7:00 pm Monday through Friday, and 9:00 am to 1:00 pm on Sunday. Equipment or materials moved on or across the travel way at other times shall be done in a manner as not to interfere with traffic.

The contractor shall maintain a minimum of 1 lane traffic in each direction except as noted below and indicated in the staging plans.

Access must be maintained to all side roads throughout construction.

C. MISCELLANEOUS:

MILLED SURFACES:

All milled surfaces shall be covered before they are opened to traffic. Failure to cover milled surfaces with asphaltic concrete mix as required by the applicable typical section shall be considered a failure to comply with the requirements of Section 150 Traffic Control and shall result in the assessment of non-refundable deductions as specified in Special Provision Section 150.08 Enforcement.

GUARDRAIL:

All bridge endposts and bridge columns shall be protected by positive barrier or guardrail and appropriate guardrail anchors at all times. Failure to do so shall be considered a failure to comply with the requirements of Section 150 Traffic Control and shall result in the assessment of non-refundable deductions as specified in Special Provision Section 150.3.12 Enforcement.

(Office of Program Delivery)

DEPARTMENT OF TRANSPORTATION
STATE OF GEORGIA

SPECIAL PROVISION

PROJECT: STP00-3223-00(004)
BIBB COUNTY
P.I. NO: 351090

SECTION 150 – TRAFFIC CONTROL

ADD the following:

150.6 SPECIAL CONDITIONS:

A. The normal workday for this project shall be 8:00 AM to 5:00 PM and the normal work week shall be Monday through Friday. The County will consider extended workdays or work weeks upon three (3) day advance written request to the County by the Contractor on a case by case basis. No work will be allowed on County furlough days or national holidays (i.e. Memorial Day, July 4th, Labor Day, etc.) and the associated weekends with these holidays.

B. The Contractor shall not install lane closures, pace traffic or move equipment or materials that interferes with traffic on Jeffersonville Road between the hours of 6:00 am to 9:00 am and 4:00 pm to 7:00 pm Monday through Friday, and 9:00 am to 1:00 pm on Sunday. Equipment or materials moved on or across the travel way at other times shall be done in a manner as not to interfere with traffic.

The contractor shall maintain a minimum of 1 lane traffic in each direction except as noted below and indicated in the staging plans.

Access must be maintained to all side roads throughout construction.

C. MISCELLANEOUS:

MILLED SURFACES:

All milled surfaces shall be covered before they are opened to traffic. Failure to cover milled surfaces with asphaltic concrete mix as required by the applicable typical section shall be considered a failure to comply with the requirements of Section 150 Traffic Control and shall result in the assessment of non-refundable deductions as specified in Special Provision Section 150.08 Enforcement.

GUARDRAIL:

All bridge endposts and bridge columns shall be protected by positive barrier or guardrail and appropriate guardrail anchors at all times. Failure to do so shall be considered a failure to comply with the requirements of Section 150 Traffic Control and shall result in the assessment of non-refundable deductions as specified in Special Provision Section 150.3.12 Enforcement.

(Office of Program Delivery)

Revised: November 8, 2005
Revised: November 7, 2006
Revised: July 15, 2008

DEPARTMENT OF TRANSPORTATION
STATE OF GEORGIA

SPECIAL PROVISION

Section 161—Control of Soil Erosion and Sedimentation

Add the following:

161.1 General Description

This Work includes using control measures shown on the Plans, ordered by the Engineer, or as required during the life of the Contract to control soil erosion and sedimentation through the use of any of the devices or methods referred to in this Section.

161.1.01 Definitions

Certified Personnel— certified personnel are defined as persons who have successfully completed the Level IA certification course approved by the Georgia Soil and Water Conservation Commission. For Department projects the certified person must also have successfully completed the Department's WECS certification course.

Design Professional as defined in the current GAR100002 NPDES permit.

161.1.02 Related References

A. Standard Specifications

Section 105—Control of Work

Section 106—Control of Materials

Section 107—Legal Regulations and Responsibility to the Public

Section 109—Measurement and Payment

Section 160—Reclamation of Material Pits and Waste Areas

Section 162—Erosion Control Check Dams

Section 163—Miscellaneous Erosion Control Items

Section 166—Restoration or Alteration of Lakes and Ponds

Section 170—Silt Retention Barrier

Section 171—Temporary Silt Fence

Section 205—Roadway Excavation

Section 434—Sand Asphalt Paved Ditches

Section 441—Miscellaneous Concrete

Section 603—Rip Rap

Section 700—Grassing

Section 710—Permanent Soil Reinforcing Mat

Section 715—Bituminous Treated Roving

Section 716—Erosion Control Mats (Blankets)

Erosion control measures contained in the Specifications include:

Erosion Control Measure	Section
Temporary Check Dams	163.3.05.J
Bituminous Treated Mulch	700.3.05.G
Concrete Paved Ditches	441
Bituminous Treated Roving	715
Erosion Control Mats (Blankets)	716
Erosion Control Check Dams	162
Grassing	700
Maintenance of Temporary Erosion Control Devices	165
Permanent Soil Reinforcing Mat	710
Reclamation of Material Pits and Waste Areas	160
Rip Rap	603
Restoration or Alteration of Lakes and Ponds	166
Sand-Asphalt Ditch Paving	434
Sediment Basin	163.3.05.C
Silt Control Gate	163.3.05.A
Silt Retention Barrier	170
Sod	700.3.05.H & 700.3.05.I
Mulch	163
Temporary Grassing	163.3.05.F
Temporary Silt Fence	171
Temporary Slope Drains	163.3.05.B
Triangular Sediment Barrier	720
Silt Filter Bag	719
Organic & Synthetic Material Fiber Blanket	713

B. Referenced Documents

Erosion and Sedimentation Pollution Control Plans (ESPCP)

161.1.03 Submittals

A. Status of Erosion Control Devices

The Worksite Erosion Control Supervisor (WECS) or certified personnel will inspect the installation and maintenance of the Erosion Control Devices according to Subsection 167.3.05.B and the ESPCP.

1. Submit all reports to the Engineer within 24 hours of the inspection. Refer to Subsection 167.3.05.C for report requirements.
2. The Engineer will review the reports and inspect the Project for compliance and concurrence with the submitted reports.
3. The Engineer will notify the WECS or certified personnel of any additional items that should be added to the reports.
4. Items listed in the report requiring maintenance or correction shall be completed within 72 hours.

B. Erosion and Sedimentation Pollution Control Plan

1. Project Plans

   An erosion and sedimentation pollution control plan (ESPCP) for the construction of the project will be provided by the Department. The ESPCP will be prepared for the various stages of construction necessary to complete the project.

   If the Contractor elects to alter the stage construction from that shown in the plans, it will be the responsibility of the Contractor to have the plans revised and prepared in accordance with the current GAR100002 NPDES permit by a Design Professional to reflect all changes in Staging. This will also include any revisions to erosion and sedimentation control item quantities. If the changes affect the Comprehensive Monitoring Program (CMP), the Contractor will be responsible for any revisions to the CMP as well. Submit revised plans and quantities to the Engineer for review prior to land disturbing activities.

2. Haul Roads, Borrow Pits, Excess Material Pits, etc.

   The Contractor is responsible for preparing erosion and sedimentation control plans for construction access roads and or haul roads borrow pits, excess material pits, etc. (inside the Right of Way). Prepare these plans for all stages of construction and include the appropriate items and quantities. Submit these plans to the Engineer for review prior to land disturbing activities. These plans are to be prepared by a Design Professional.

   If construction of access roads, haul roads, borrow pits, excess material pits, etc., (inside the Right of Way) encroach within the 25 foot (7.6 m) buffer along the banks of all state waters or within the 50 ft. (15 m) buffer along the banks of any state waters classified as a “trout stream”, a state water buffer variance must be obtained by the Contractor prior to beginning any land disturbing activity in the stream buffer.

3. Erosion Control for Borrow and Excess Material Pits Outside the Right-of-Way

   Erosion control for borrow pits and excess material pits outside the right of way is the responsibility of the Contractor. If borrow or excess material pits require coverage under the National Pollutant Discharge Elimination System permit (NPDES) or other permits or variances are required, submit a copy of all documentation required by the permitting agency to the Engineer. All costs associated with complying with local, state, and federal laws and regulations are the responsibility of the Contractor.

4. Culverts and Pipes

   The ESPCP does not contain approved methods to construct a stream diversion or stream diversion

channel. The Contractor shall prepare a diversion plan utilizing a Design Professional as defined in the current NPDES permit. See Subsection 161.3.05 G for additional information.

5. Temporary Asphalt or Concrete Batch Plants

   In addition to the requirements of any applicable specifications, if the Department authorizes the temporary installation and use of any asphalt, concrete or similar batch plants within its right of way, the contractor shall submit an NOI to the Georgia Environmental Protection Division for coverage under the following NPDES permits; The Infrastructure permit for the construction of the plant, and the Industrial permit for the operation of, such a plant. The contractor shall submit the NOIs as both the Owner and the Operator.

161.2 Materials

General Provisions 101 through 150.

161.2.01 Delivery, Storage, and Handling

General Provisions 101 through 150.

161.3 Construction Requirements

161.3.01 Personnel

A. Duties of the Worksite Erosion Control Supervisor

Before beginning Work, designate a Worksite Erosion Control Supervisor (WECS) to initiate, install, maintain, inspect, and report the condition of all erosion control devices as described in Sections 160 through 171 or in the Contract and ESPCP documents. The designee shall submit their qualifications on the Department provided resume form for consideration and approval. The contractor may utilize additional persons having WECS qualifications to facilitate compliance however, only one WECS shall be designated at a time.

The WECS and alternates shall:

- Be an employee of the Prime Contractor.
- Have at least one year of experience in erosion and sediment control, including the installation, inspection, maintenance and reporting of BMPs.
- Successfully completed the Georgia Soil and Water Conservation Commission Certification Course Level IA and the Department's WECS Certification Course.
- Provide phone numbers where the WECS can be located 24 hours a day.

The WECS' duties include the following:

1. Be available or have an approved representative available 24 hours a day and have access to the equipment, personnel, and materials needed to maintain erosion control and flooding control.
2. Inform the Engineer in writing whenever the alternate WECS assumes project responsibilities.
3. Ensure that erosion control deficiencies are corrected within seventy two (72) hours or immediately during emergencies. Deficiencies that interfere with traffic flow, safety or downstream turbidity are to be corrected immediately.
4. During heavy rain, have the construction area patrolled day or night, any day of the week to quickly detect and correct erosion or flooding problems before they interfere with traffic flow, safety, or downstream turbidity.

5. Be on the site within three (3) hours after receiving notification of an emergency prepared to positively respond to the conditions encountered. The Department may handle emergencies without notifying the Contractor. The Department will recover costs for emergency maintenance work according to Subsection 105.15, "Failure to Maintain Roadway or Structures."
6. Maintain and submit for project record, "As-built" Erosion and Sedimentation Control Plans that supplement and graphically depict EC-1 reported additions and deletions of BMPs. The As-Built plans are to be accessed and retained at a Department facility at all times.
7. Ensure that both the WECS and the alternate meet the criteria of this Subsection.
8. The WECS shall maintain a current certification card for the duration of the project. Recertification of the WECS will be required prior to the expiration date shown on the Certification card in order to remain as Certified Personnel and the WECS for the project.

Failure of the WECS or alternate to perform the duties specified in the Contract, or whose performance, has resulted in a citation being received from a State or Federal Regulatory Agency, e.g. the Georgia Environmental Protection Division, shall result in one or more of the following;

- Suspension of the WECS' certification for a period of not less than 30 days
- Removal of the Contractor's project superintendent in accordance with Subsections 105.05 and 108.05 for a period not less than 14 days
- Department wide revocation of the WECS certification for a period of 12 months
- Removal of the Contractor's project superintendent in accordance with Subsections 105.05 and 108.05

161.3.02 Equipment

General Provisions 101 through 150.

161.3.03 Preparation

General Provisions 101 through 150.

161.3.04 Fabrication

General Provisions 101 through 150.

161.3.05 Construction

Coordinate the temporary and permanent erosion control provisions in this Specification with the permanent erosion control provisions in the Contract to ensure economical, effective, and continuous erosion control throughout the construction and post-construction periods.

At all times that land disturbing activity is underway, a person meeting the requirements of, "certified person" by the GSWCC (Level IA) must be on the project.

A. Control Dust Pollution

The contractor shall keep dust pollution to a minimum during any of the activities performed on the project. It may be necessary to apply water or other BMPs to roadways or other areas reduce pollution.

B. Perform Permanent or Temporary Grassing

Perform permanent grassing, temporary grassing, or mulching on cut and fill slopes weekly (unless a shorter period is required by Subsection 107.23) during grading operations. When conditions warrant, the Engineer may require more frequent intervals.

Under no circumstances shall the grading (height of cut) exceed the height operating range of the grassing equipment. It is extremely important to obtain a cover, whether it is mulch, temporary grass or permanent grass. Adequate mulch is a must.

When grading operations or other soil disturbing activities have stopped, perform grassing or erosion control as shown in the Plans, as shown in an approved Plan submitted by the Contractor, or as directed by the Engineer.

C. Seed and Mulch

Refer to Subsection 161.3.05.B, "Perform Permanent or Temporary Grassing".

D. Implement Permanent or Temporary Erosion Control

1. Silt fence shown along the perimeter, e.g. right of way, and sediment containment devices, e.g. sediment basins, shall be installed prior to or concurrently with clearing and grubbing operations.
2. Incorporate permanent erosion control features into the Project at the earliest practicable time, e.g. velocity dissipation, permanent ditch protection.
3. Use temporary erosion control measures to address conditions that develop during construction but were unforeseen during the design stage.
4. Use temporary erosion control measures when installation of permanent erosion control features cannot be accomplished.

The Engineer has the authority to:

- Limit the surface area of erodible earth material exposed by clearing and grubbing.
- Limit the surface area of erodible earth material exposed by excavation and borrow and fill operations.
- Limit the area of excavation, and embankment operations in progress to correspond with the Contractor's ability to keep the finish grading, mulching, seeding, and other permanent erosion control measures current.
- Direct the Contractor to provide immediate permanent or temporary erosion control to prevent contamination of adjacent streams or water courses, lakes, ponds, or other areas of water impoundment.

Such Work may include constructing items listed in the table in Subsection 161.1.02.A, "Related References" or other control devices or methods to control erosion.

E. Erodible Area

NOTE: Never allow the surface area of erodible earth material exposed at one time to exceed 17 acres (7 ha) except as approved by the State Construction Engineer.

The maximum of 17 acres (7 ha) of exposed erodible earth applies to the entire Project and to all of its combined operations as a whole, not to the exposed erodible earth of each individual operation.

Upon receipt of a written request from the contractor the State Construction Engineer, or his designee, will review; the request, any justifications and the Project conditions for waiver of the 17 acres (7 ha) limitation.

If the 17 acre limitation is increased by the State Construction Engineer, the WECS shall not be assigned to another project in that capacity and should remain on site each work day that the exposed acreage exceeds 17 acres.

After installing temporary erosion control devices, e.g., grassing, mulching, stabilizing an area, and having it approved by the Engineer, that area will be released from the 17 acres (7 ha) limit.

F. Perform Grading Operations

Perform the following grading operations:

1. Complete each roadway cut and embankment continuously, unless otherwise specified in the Contract or ordered by the Engineer.
2. Maintain the top of the earthwork in roadway sections throughout the construction stages to allow water to run off to the outer edges.
3. Provide temporary slope drain facilities with inlets and velocity dissipaters (straw bales, silt fence, aprons, etc.) to carry the runoff water to the bottom of the slopes. Place drains at intervals to handle the accumulated water.
4. Continue temporary erosion control measures until permanent drainage facilities have been constructed, pavement placed, and the grass on planted slopes stabilized to deter erosion.

G. Perform Construction in Rivers and Streams

Perform construction in river and stream beds as follows:

1. Unless otherwise agreed to in writing by the Engineer, restrict construction operations in rivers, streams, and impoundments to:
    - Areas where channel changes or access for construction are shown on the Plans to construct temporary or permanent structures.
2. If channel changes or diversions are not shown on the Plans, the Contractor shall develop diversion plans prepared in accordance with the current GAR100002 NPDES Infrastructure Construction permit utilizing a design professional as defined within the permit. The Engineer will review prepared diversion plans for content only and accepts no responsibility for design errors or omissions. Amendments will be made part of the project plans by attachment. Include any associated costs in the price bid for the overall contract. Any contract time associated with the submittal or its review and subsequent response will not be considered for an extension of Contract time. All time associated with this subsection shall be considered incidental.
3. If additional access for construction or removal of work bridges, temporary roads/access or work platforms is necessary, and will require additional encroachment upon river or stream banks and bottoms, the contractor shall prepare a plan in accordance with the current GAR100002 NPDES Infrastructure Construction permit utilizing a design professional as defined within the permit. Plans should be submitted at least 12 weeks prior to the date the associated work is expected to begin. If necessary, the plan will be provided to the appropriate regulating authority, e.g. United States Army Corps of Engineers by the Department for consideration and approval. No work that impacts areas beyond what has been shown in the approved plans will be allowed to begin until written approval of the submitted plan has been provided by the Department. Approved plan amendments will be made part of the project plans by attachment. Include any associated costs in the price bid for the overall contract. Any contract time associated with the submittal or its review and subsequent response will not be considered for an extension of Contract time. All time associated with this subsection shall be considered incidental.
4. Clear rivers, streams, and impoundments of the following as soon as conditions permit:
    - Falsework

- Piling that is to be removed
- Debris
- Other obstructions placed or caused by construction operations

5. Do not ford live streams with construction equipment.
6. Use temporary bridges or other structures that are adequate for a 25-year storm for stream crossings. Include costs in the price bid for the overall contract.
7. Do not operate mechanized equipment in live streams except to construct channel changes or temporary or permanent structures, and to remove temporary structures, unless otherwise approved in writing by the Engineer.

H. State Water Buffers and Environmental Restrictions

1. The WECS shall review the plans and contract documents for environmental restrictions, Environmentally Sensitive Areas (ESA), e.g. buffers, etc. prior to performing land disturbing activities.
2. The WECS shall ensure all parties performing land disturbing activities within the project limits are aware of all environmental restrictions.
3. Buffer delineation shall be performed prior to clearing, or any other land disturbing activities. Site conditions may require temporary delineation measures are implemented prior to the installation of orange barrier/safety fencing. The means of temporary delineation shall have the Engineer's prior approval.
4. The WECS shall allow the Engineer to review the buffer delineation prior to performing any land disturbing activities, including but not limited to clearing, grubbing and thinning of vegetation. Any removal and relocation of buffer delineation based upon the Engineer's review will not be measured for separate payment.
5. The WECS shall advise the Engineer of any surface water(s) encountered that are not shown in the plans. The WECS shall prevent land disturbing activities from occurring within surface water buffers until the Engineer provides approval to proceed.

I. General Requirements

Projects that consist of asphalt resurfacing, shoulder reconstruction and/or shoulder widening; schedule and perform the construction of the project to comply with the following:

After temporary and permanent erosion control devices are installed and the area permanently stabilized (temporary or permanent) and approved by the Engineer, the area may be released from the 1 acre (0.4 ha) limit.

The maximum of 1 acre (0.4 ha) of erodible earth applies to the entire project and to all combined operations, including borrow and excess material operations that are within the right of way, not 1 acre (0.4 ha) of exposed erodible earth for each operation.

NOTE: Never allow the surface area of erodible earth material exposed at one time to exceed 1 acre (0.4 ha).

1. Do not allow the disturbed exposed erodible area to exceed 1 acres (0.4 ha). This 1 acre (0.4 ha) limit includes all disturbed areas relating to the construction of the project including but not limited to slope and shoulder construction.

2. At the end of each working day, permanently stabilize all of the area disturbed by slope and

shoulder reconstruction to prevent any contamination of adjacent streams or other watercourses, lakes, ponds or other areas of water impoundment. For purposes of this Specification, the end of the working day is defined as when the construction operations cease. For example, 6:00 a.m. is the end of the working day on a project that allows work only between 9:00 p.m. and 6:00 a.m.)

3. Stabilize the cut and fill slopes and shoulder with permanent or temporary grassing and a Wood Fiber Blanket (Section 713, Type II). Mulching is not allowed. Borrow pits, soil disposal sites and haul roads will not require daily applications of wood fiber blanket. The application rate for the Wood Fiber Blanket on shoulder reconstruction is the rate specified for Shoulders. For shoulder reconstruction, the ground preparation requirements of Subsection 700.3.05.A.1 are waived. Preparation consists of scarifying the existing shoulders 4 to 6 in (100 to 150 mm) deep and leaving the area in a smooth uniform condition free from stones, lumps, roots or other material.

4. If a sudden rain event occurs that would not allow the Contractor to apply the Type II Wood Fiber Blanket per Section 713, install Wood Fiber Blanket Type I per Section 713 if directed by the Engineer. Wood Fiber Blanket Type I application is for emergency use only.

Install temporary grass or permanent grass according to seasonal limitations and Specifications. When temporary grass is used, use the overseeding method (Subsection 700.3.05.E.4) when planting permanent grass.

3. Remove and dispose of all material excavated for the trench widening operation at an approved soil disposal site by the end of each working day. When shoulder reconstruction is required, this material may be used to reconstruct the graded shoulder after all asphaltic concrete pavement has been placed.

4. Provide immediate permanent and/or temporary erosion control measures for borrow pits, soil disposal sites and haul roads to prevent any contamination of adjacent streams or other watercourses, lakes, ponds or other areas of water impoundment.

5. Place asphalt in the trench the same day as the excavation occurs. Place asphalt or concrete in driveways and side roads being re-graded the same day as the excavation occurs. Stabilize any disturbed or exposed soil that is not covered with asphalt with a Wood Fiber Blanket (and grass seed). Payment will be made for the Wood Fiber Blanket and grass seed only if the shoulder has been constructed to final dimensions and grade and no further grading will be required.

6. Do not allow the grading (height of cut or fill) to exceed the operating range of the grassing equipment.

7. When grading operations or other soil disturbing activities are suspended, regardless of the reason, promptly perform all necessary permanent stabilization and/or erosion control work.

8. Use temporary erosion control measures to:

To correct conditions that develop during construction but were unforeseen during the design stage.

To use as needed before installing permanent erosion control features.

To temporarily control erosion that develops during normal construction practices but are not associated with permanent control features on the Project.

9. When conditions warrant, such as unfavorable weather (rain event), the Engineer may require more frequent intervals for this work.

161.3.06 Quality Acceptance

Before Final Acceptance of the Work, clean drainage structures within the project limits, both existing and newly constructed, and ensure that they are functioning properly. Costs to accomplish this work are

incidental and shall be included in the overall bid for the Contract.

161.3.07 Contractor Warranty and Maintenance

Maintain the erosion control features installed to:

- Contain erosion within the limits of the right-of-way
- Control storm water discharges from disturbed areas

Effectively install and maintain the erosion control features. Ensure these features contain the erosion and sediment within the limits of the rights of way and control the discharges of storm-water from disturbed areas to meet all local, state, and federal requirements on water quality.

If a construction Project has separate contractors, the Prime Contractor shall maintain the erosion control features at grading sites as acceptable to the Engineer until the Contract is accepted. If any erosion control devices are damaged by any contractor either by neglect, by construction methods, or any other reasons, including acts of nature, they shall be repaired within 24 hours by the Prime Contractor at no cost to the Department.

161.4 Measurement

Control of soil erosion and sedimentation is not measured separately for payment.

161.4.01 Limits

General Provisions 101 through 150.

161.5 Payment

When no pay item is shown in the Contract, the requirements of this Specification and the Erosion Control Plan shall be in full effect. The cost of complying with these requirements will not be paid for separately, but shall be included in the overall bid submitted with the exception of inspections performed by qualified personnel which will be included in Section 167.

When listed as a pay item in the Contract, payment will be made at the unit price bid for each particular item.

No payment will be made for erosion control outside the Right-of-Way or construction easements except as provided for by the Plans.

161.5.01 Enforcement and Adjustments

A. Failure to Provide a WECS

If a designated WECS is not maintained or if the Contractor does not comply with this Specification, cease activities except traffic control and erosion control work. Monies that are due or that may become due also may be withheld according to the Specifications

B. Failure to submit reports

A non-refundable deduction will be taken from the schedule below whenever the WECS fails to submit completed reports required by Subsection 167.3.05.C in accordance with the provisions of this specification.

C. Failure to Comply with Specifications

If the Contractor fails to comply with any of the requirements of this Specification, all activities shall cease immediately except traffic control and erosion control related work.

Monies that are currently due or that may become due shall be withheld according to the specifications. In addition, nonrefundable monies shall be deducted from the contract as shown in the Schedule of Deductions

table below. These deductions are in addition to any actions taken in the above subsections. Deductions assessed for uncorrected deficiencies shall continue until all corrections are completed to the satisfaction of the Engineer.

D. Receipt of a Consent Order or Notice of Violation, etc.

Regulatory enforcement actions will be resolved including at a minimum the following steps;

- The Department will perform an internal review of the alleged violations
- The Department will then meet with the Contractor to review and further determine responsibilities for the alleged violations
- The Department will then arrange to collectively meet with the regulatory agencies to negotiate resolutions and/or settlements.

The Department does not waive any rights of the Contractor to resolve such matters however, in the event that regulatory agency communication is addressed jointly to the Department and to the contractor, the Department reserves the right to coordinate all communications, e.g., written correspondence, and to schedule jointly attended meetings with Regulatory agencies such that timely and accurate responses are known to the Department.

Such Orders or Notices may result in the assessment of Deductions from the table below for each day the condition remains non-compliant following an agreed remedy.

Monetary penalties for which the contractor is obligated for as a result of regulatory enforcement may be withheld from future monies due the contractor.

Schedule of Deductions for Each Calendar Day of Erosion Control Deficiencies
Initial Occurrence*
Original Total Contract Amount

From More Than	To and Including	Daily Charge
0	$100,000	$750
$100,000	$1,000,000	$1125
$1,000,000	$5,000,000	$2000
$5,000,000	$15,000,000	$3000
$15,000,000	-	$5000

*Continued non-compliance with the requirements of this specification may result in the doubling of the above tabulated Daily Charge.

Upon written request from the Contractor, the Engineer may allow, limited activities to concurrently proceed once significant portions of the corrective work have been completed. This authorization may be similarly rescinded if in the opinion of the Engineer corrective work is not being diligently pursued.

December 12, 2006
Revised: July 15, 2008

DEPARTMENT OF TRANSPORTATION
STATE OF GEORGIA

SPECIAL PROVISION

Section 163—Miscellaneous Erosion Control Items

Delete Section 163 and substitute the following:

163.1 General Description

This work includes constructing and removing:

- Silt control gates
- Temporary erosion control slope drains shown on the Plans or as directed
- Sediment basins
- Baled straw sediment barrier and check dams
- Other temporary erosion control structures shown on the Plans or directed by the Engineer

This work also includes applying mulch (straw or hay, erosion control compost), and temporary grass.

163.1.01 Related References

A. Standard Specifications

Section 109—Measurement and Payment

Section 161—Control of Soil Erosion and Sedimentation

Section 171—Temporary Silt Fence

Section 500—Concrete Structures

Section 603—Rip Rap

Section 700—Grassing

Section 715—Bituminous Treated Roving

Section 720 – Triangular Silt Barrier

Section 822—Emulsified Asphalt

Section 860—Lumber and Timber

Section 863—Preservative Treatment of Timber Products

Section 890—Seed and Sod

Section 893—Miscellaneous Planting Materials

B. Referenced Documents

AASHTO M252

AASHTO M294

163.1.02 Submittals

Provide written documentation to the Engineer as to the average weight of the bales of mulch.

163.2 Materials

Provide materials shown on the Plans, such as pipe, spillways, wood baffles, and other accessories including an anti-seep collar, when necessary. The materials shall remain the Contractor's property after removal, unless otherwise shown on the Plans.

Materials may be new or used; however, the Engineer shall approve previously used materials before use.

Materials shall meet the requirements of the following Specifications:

Material	Section
Mulch	893.2.02
Temporary Silt Fence	171
Concrete Aprons and Footings shall be Class A	500
Rip Rap	603
Temporary Grass	700
Bituminous Treated Roving	715
Triangular Silt Barrier	720
Lumber and Timber	860.2.01
Preservative Treatment of Timber Products	863.1
Corrugated Polyethylene Temporary Slope Drain Pipe	AASHTO M252 or M294

163.2.01 Delivery, Storage, and Handling

General Provisions 101 through 150.

163.3 Construction Requirements

163.3.01 Personnel

General Provisions 101 through 150.

163.3.02 Equipment

General Provisions 101 through 150.

163.3.03 Preparation

General Provisions 101 through 150.

163.3.04 Fabrication

General Provisions 101 through 150.

163.3.05 Construction

A. Silt Control Gates

If silt control gates are required or are directed by the Engineer, follow these guidelines to construct them:

1. Clear and grade only that portion of the roadway within the affected drainage area where the drainage structure will be constructed.
2. Construct or install the drainage structure and backfill as required for stability.
3. Install the silt control gate at the inlet of the structure. Use the type indicated on the Plans.
4. Vary the height of the gate as required or as shown on the Plans.
5. Finish grading the roadway in the affected drainage area. Grass and mulch slopes and ditches that will not be paved. Construct the ditch paving required in the affected area.
6. Keep the gate in place until the work in the affected drainage area is complete and the erodible area is stabilized.
7. Remove the Type 1 silt gate assembly by sawing off the wood posts flush with the concrete apron. Leave the concrete apron between the gate and the structure inlet in place. The gate shall remain the property of the Contractor.

B. Temporary Slope Drains

If temporary slope drains are required, conduct the roadway grading operation according to Section 161 and follow these guidelines:

1. Place temporary pipe slope drains with inlets and velocity dissipaters (straw bales, silt fence, or aprons) according to the Plans.
2. Securely anchor the inlet into the slope to provide a watertight connection to the earth berm. Ensure that all connections in the pipe are leak proof.
3. Place temporary slope drains at a spacing of 350 ft (105 m) maximum on a 0% to 2% grade and at a spacing of 200 ft (60m) maximum on steeper grades, or more frequently as directed by the Engineer. Keep the slope drains in place until the permanent grass has grown enough to control erosion.
4. Remove the slope drains and grass the disturbed area with permanent grass. However, the temporary slope drains may remain in place to help establish permanent grass if approved by the Engineer.

C. Sediment Basins

Construct sediment basins according to the Plans at the required location, or as modified by the Engineer.

1. Construct the unit complete as shown, including:
    - Grading
    - Drainage
    - Rip rap
    - Spillways
    - Anti-seep collar
    - Temporary mulching and grassing on internal and external slopes
    - Accessories to complete the basin
2. When the sediment basin is no longer needed, remove and dispose of the remaining sediment.
3. Remove the sediment basin. Grade to drain and restore the area to blend with the adjacent landscape.
4. Mulch and permanently grass the disturbed areas according to Section 700.

D. Sediment Barrier (baled straw)

Construct sediment barrier (baled straw) according to the Plan details. Use rectangular, standard size

baled straw in mechanically produced bales.

The following items may be substituted for sediment barrier (baled straw)

1. Type B Silt Fence.
2. Triangular Silt Barrier.
3. Synthetic Fiber: Use synthetic fiber bales of circular cross section at least 18 in (450 mm) in diameter. Use synthetic bales of 3 ft or 6 ft (0.9 m or 1.8 m) in length that are capable of being linked together to form a continuous roll of the desired total length. Use bales that are enclosed in a geotextile fabric and that contain a pre-made stake hole for anchoring.
4. Coir: Use coir fiber bales of circular cross section at least 16" (400mm) in diameter. Use coir bales of 10 ft, 15 ft, or 20 ft (3 m, 4.5 m, or 6 m) in length. Use coir baled with coir twine netting with 2 in X 2 in (50 mm X 50 mm) openings. Use coir bales with a dry density of at least 7 lb/ft^3 (112 kg/m^3). Anchor in place with 2 in X 4 in (50 mm X 100 mm) wooden wedges with a 6 in (150 mm) nail at the top. Place wedges no more than 36 in (900 mm) apart.
5. Excelsior: Use curled aspen excelsior fiber with barbed edges in circular bales of at least 18 in (450 mm) in diameter and nominally 10 ft (3 m) in length. Use excelsior baled with polyester netting with 1 in X 1 in (25 mm by 25 mm) triangular openings. Use excelsior bales with a dry density of at least 1.4 lb/ft^3 (22 kg/m^3). Anchor in place with 1 in (25 mm) diameter wooden stakes driven through the netting at intervals of no more than 2 ft (600 mm).
6. Compost Filter Sock: Use general use compost (see Subsection 893.2.02.A.5.b) in circular bales at least 18 in in diameter. Use compost baled with photo-degradable plastic mesh 3 mils thick with a maximum 0.25 in X 0.25 in (6 mm X 6 mm) openings. Anchor in place with 1 in (25 mm) diameter wooden stakes driven through the netting at intervals of no more than 2 ft (600 mm). The sock shall be dispersed on site when no longer required, as determined by the Engineer. Do not use Compost Filter Socks in areas where the use of fertilizer is restricted.
7. Compost Filter Berm: Use erosion control compost (see Subsection 893.2.02) to construct an uncompacted 1.5 ft to 2 ft (450 mm to 600 mm) high trapezoidal berm which is approximately 2 ft to 3 ft (600 mm to 1 m) wide at the top and minimum 4 ft (1.2 m) wide at the base. Do not use Compost Filter Berms in areas where the use of fertilizer is restricted.

   The construction of the compost filter berm includes the following:

   a. Keeping the berm in a functional condition.
   b. Installing additional berm material when necessary.
   c. Removing the berm when no longer required, as determined by the Engineer. At the Engineer's discretion, berm material may be left to decompose naturally, or distributed over the adjacent area.

E. Other Temporary Structures

When special conditions occur during the design stage, the Plans may show other temporary structures for erosion control with required materials and construction methods.

F. Temporary Grass

Use a quick growing species of temporary grass such as rye grass, millet, or a cereal grass suitable to the area and season.

Use temporary grass in the following situations:

- When required by the Specifications or directed by the Engineer to control erosion where permanent grassing cannot be planted.
- To protect an area for longer than mulch is expected to last (60 calendar days).

Plant temporary grass as follows:

1. Use seeds that conform to Subsection 890.2.01, "Seed." Perform seeding according to Section 700; except use the minimum ground preparation necessary to provide a seed bed if further grading is required.
2. Prepare areas that require no further grading according to Subsection 700.3.05.A, "Ground Preparation." Omit the lime unless the area will be planted with permanent grass without further grading. In this case, apply the lime according to Section 700.
3. Apply mixed grade fertilizer at 400 lbs/acre (450 kg/ha). Omit the nitrogen. Mulch (with straw or hay) temporary grass according to Section 700. (Erosion control compost Mulch will not be allowed with grassing.)
4. Before planting permanent grass, thoroughly plow and prepare areas where temporary grass has been planted according to Subsection 700.3.05.A, "Ground Preparation".
5. Apply Polyacrylamide (PAM) to all areas that receive temporary grassing.
6. Apply Pam (powder) before grassing or PAM (emulsion) to the hydroseeding operation.
7. Apply PAM according to manufacturer specifications.
8. Use only anionic PAM.

For projects that consist of shoulder reconstruction and/or shoulder widening refer to Subsection 161.3.05.H for Wood Fiber Blanket requirements.

G. Mulch

When stage construction or other conditions prevent completing a roadway section continuously, apply mulch (straw or hay or erosion control compost) to control erosion. Mulch may be used without temporary grassing for 60 calendar days or less. Areas stabilized with only mulch (straw/hay/compost) shall be planted with temporary grass after 60 calendar days.

Apply mulch as follows:

1. Mulch (Hay or Straw)
   a. Uniformly spread the mulch over the designated areas from 2 in to 4 in (50 mm to 100 mm) thick.
   b. After spreading the mulch, walk in the mulch by using a tracked vehicle (preferred method), empty sheep foot roller, light discing, or other means that preserves the finished cross section of the prepared areas. The Engineer will approve of the method.
   c. Place temporary mulch on slopes as steep as 2:1 by using a tracked vehicle to imbed the mulch into the slope. Where specified, use bituminous treated mulch (straw or hay) according to Subsection 700.3.05.G.1, "Mulch with Binder".
   d. When grassing operations begin, leave the mulch in place and plow the mulch into the soil during seed bed preparation. The mulch will become beneficial plant food for the newly planted grass.
2. Apply mulch (erosion control compost) as follows:
   a. Uniformly spread the mulch (erosion control compost) over the designated areas 2 in (50 mm) thick.
   b. When rolling is necessary, or directed by the Engineer, use a light corrugated drum roller.

c. When grassing operations begin, leave the mulch in place and plow the mulch into the soil during seed bed preparation. The mulch will become beneficial plant food for the newly planted grass.
d. Plant temporary grass on area stabilized with mulch (erosion control compost) after 60 calendar days.
e. Do not use Erosion Control Compost in areas where the use of fertilizer is restricted.

H. Miscellaneous Erosion Control Not Shown on the Plans

When conditions develop during construction that were unforeseen in the design stage, the Engineer may direct the Contractor to construct temporary devices such as but not limited to:

- Bulkheads
- Sump holes
- Half round pipe for use as ditch liners
- U-V resistant plastic sheets to cover critical cut slopes

The Engineer and the Contractor will determine the placement to ensure erosion control in the affected area.

I. Diversion Channels

When constructing a culvert or other drainage structure in a live stream that requires diverting a stream, construct a diversion channel.

J. Temporary Check Dams

Temporary check dams are constructed of the following materials;

- Stone plain rip rap according to Section 603 or of sand bags as in Section 603 without Portland cement. (Place plastic filter fabric on ditch section before placing rip rap.)
- Fabric (Type C silt fence)
- Hay Bales

Temporary check dams shall be constructed according to plan details and shall remain in place until the permanent ditch protection is in place or being installed and the removal is approved by the Engineer.

K. Construction Exits

Locate construction exits at any point where vehicles will be leaving the project onto a public roadway. Install construction exits at the locations shown in the plans and in accordance with plan details.

L. Retrofit

Add the retrofit device to the permanent outlet structure as shown on the Plan details.

When all land disturbing activities that would contribute sediment-laden runoff to the basin are complete, clean the basin of sediment and stabilize the basin area with vegetation.

When the basin is stabilized, remove the retrofit device from the permanent outlet structure of the detention pond.

M. Inlet Sediment Trap

Inlet sediment traps consist of a temporary device placed around a storm drain inlet to trap sediment. An excavated area adjacent to the sediment trap will provide additional sediment storage.

Inlet sediment traps may be constructed of Type C silt fence, plastic frame and filter, hay bales, baffle box, or other filtering materials approved by the Engineer.

Construct inlet sediment traps according to the appropriate specification for the material selected for the trap.

Place inlet sediment traps as shown on the Plans or as directed by the Engineer.

163.3.06 Quality Acceptance

General Provisions 101 through 150.

163.3.07 Contractor Warranty and Maintenance

General Provisions 101 through 150.

163.4 Measurement

A. Silt Control Gates

Silt control gates are measured for payment by the entire structure constructed at each location complete in place and accepted. Silt control gates constructed at the inlet of multiple lines of drainage structures are measured for payment as a single unit.

B. Temporary Slope Drains

Temporary slope drains are measured for payment by the linear foot (meter) of pipe placed. When required, the inlet spillway and outlet apron and/or other dissipation devices are incidental and not measured separately.

C. Sediment Basins

Sediment basins are measured for payment by the entire structure complete, including construction, maintenance, and removal. Measurement also includes:

- Earthwork
- Drainage
- Spillways
- Baffles
- Rip rap
- Final cleaning to remove the basin

Permanent and temporary grassing for sediment basins is measured separately for payment.

D. Diversion Channels

Diversion channels are not measured for payment. Costs for the entire structure complete, including materials, construction (including earthwork), and removal is included in the price bid for the drainage structure or for other Contract items.

E. Temporary Grass

Temporary grass is measured for payment by the acre (hectare). Lime, when required, is measured by the ton (megagram). Mulch and fertilizer are measured separately for payment.

F. Mulch

Mulch (straw or hay, or erosion control compost) is measured for payment by the ton (megagram).

G. Baled Straw Sediment Barrier, Baled Straw Check Dam and Fabric Check Dams

Baled straw sediment barrier, baled straw check dams, and fabric check dams are measured by the

linear foot (meter). When the Contractor substitutes a product allowed in Subsection 163.3.05.D for baled straw sediment barrier or when the Engineer directs this substitution, the product will be measured by the linear foot (meter).

H. Rip Rap Check Dams

Rip Rap Check Dams are measured per each which will include all work necessary to construct the check dam including plastic filter fabric placed beneath the rip rap or sand bags.

I. Construction Exits

Construction exits are measured per each which will include all work necessary to construct the exit including the required geotextile fabric placed beneath the aggregate.

J. Retrofit

Retrofit will be measured for payment per each. The construction of the detention pond and permanent outlet structure will be measured separately under the appropriate items.

K. Inlet Sediment Trap

Inlet sediment traps, regardless of the material selected, are measured per each which includes all work necessary to construct the trap including any incidentals and providing the excavated area for sediment storage.

163.4.01 Limits

General Provisions 101 through 150.

163.5 Payment

A. Silt Control Gates

The specified silt control gates are paid for at the Contract Unit Price per each. Payment is full compensation for:

- Furnishing the material and labor
- Constructing the concrete apron as shown on the Plans
- Excavating and backfilling to place the apron
- Removing the gate

B. Temporary Slope Drains

Temporary slope drains are paid for by the linear foot (meter). Payment is full compensation for materials, construction, removal (if required), inlet spillways, velocity dissipaters, and outlet aprons.

When temporary drain inlets and pipe slope drains are removed, they remain the Contractor's property and may be reused or removed from the Project as the Contractor desires. Reused pipe or inlets are paid for the same as new pipe or inlets.

C. Sediment Basin

Sediment basins, measured according to Subsection 163.4,C "Measurement," are paid for by the unit, per each, for the type specified on the Plans. Price and payment are full compensation for work and supervision to construct, and remove the sediment basin, including final clean-up.

D. Diversion Channel

Diversion channels are not paid for separately; they are included in the price bid for the drainage

structure or for other Contract Items.

E. Temporary Grass

Temporary grass is paid for by the acre (hectare). Payment is full compensation for all equipment, labor, ground preparation, materials, wood fiber mulch, polyacrylamide, and other incidentals. Lime (when required) is paid for by the ton (megagram). Mulch and fertilizer are paid for separately.

F. Mulch

Mulch is paid for by the ton. Payment is full compensation for all materials, labor, maintenance, equipment and other incidentals.

The weight for payment of straw or hay mulch will be the product of the number of bales used and the average weight per bale as determined on certified scales provided by the contractor or state certified scales. Provide written documentation to the Engineer stating the average weight of the bales.

The weight of erosion control compost mulch will be determined by weighing each loaded vehicle on the required motor truck scale as the material is hauled to the roadway, or by using recorded weights if a digital recording device is used. The contractor may propose other methods of providing the weight of the mulch to Engineer for approval.

G. Baled Straw Sediment barrier, Baled Straw Check Dams and Fabric Check Dams (Type C Silt Fence)

Baled straw sediment barrier, baled straw check dams and fabric check dams (type C silt fence), complete in place and accepted are paid for at the Contract Unit Price bid per linear foot (meter). Payment is full compensation for constructing, and removing (when directed) the baled straw sediment barrier or either check dam.

When the Contractor substitutes any product allowed in Subsection 163.3.05.D for baled straw sediment barrier or when the Engineer directs this substitution, payment is made at the bid price per linear foot (meter) for baled straw sediment barrier.

H. Rip Rap Check Dams

Rip Rap Check Dams are paid for per each. Payment is full compensation for all materials, construction, and removal. Reused stone plain rip rap or sandbags are paid for on the same basis as new items. Filter fabric required under rip rap check dams is included in the price bid for each check dam.

I. Construction Exits

Construction exits are paid for per each. Payment is full compensation for all materials including the required geotextile, construction, and removal.

J. Retrofit

This item is paid for at the Contract Unit Price per each. Payment is full compensation for all work, supervision, materials (including the stone filter), labor and equipment necessary to construct and remove the retrofit device from an existing or proposed detention pond outlet structure.

K. Inlet Sediment Trap

Inlet sediment traps are paid for per each. Payment is full compensation for all materials, construction, and removal.

The Items in this Section (except temporary grass and mulch) are made as partial payments as follows:

- When the item is installed and put into operation the Contractor will be paid 75 percent of the Contract price.

- When the Engineer instructs the Contractor that the Item is no longer required and is to remain in place or is removed, whichever applies, the remaining 25 percent will be paid.

Temporary devices may be left in place at the Engineer's discretion at no change in cost. Payment for temporary grass will be made based on the number of acres (hectares) grassed. Mulch will be based on the number of tons (megagrams) used.

Payment is made under:

Item No. 163	Construct and remove silt control gate, type__	Per each
Item No. 163	Construct and remove temporary pipe slope drains__	Per linear foot (meter)
Item No. 163	Construct and remove temporary sediment barrier or baled straw check dam, __	Per linear foot (meter)
Item No. 163	Construct and remove sediment basin type__, Sta. No.___	Per each
Item No. 163	Construct and remove Fabric Check Dam (type C silt fence)	Per linear foot (meter)
Item No. 163	Construct and remove Rip Rap Check Dams ,Stone Plain Rip Rap/Sand Bags	Per Each
Item No. 163	Construction exit	Per each
Item No. 163	Construct and remove retrofit, Sta. No.____	Per each
Item No. 163	Construct and remove inlet sediment trap	Per each
Item No. 163	Temporary grass	Per acre (hectare)
Item No. 163	Mulch	Per ton (megagram)

163.5.01 Adjustments

General Provisions 101 through 150.

First Use Date: May 19, 2006
Revised: July 15, 2008

DEPARTMENT OF TRANSPORTATION
STATE OF GEORGIA

SPECIAL PROVISION

Section 165—Maintenance of Temporary Erosion and Sedimentation Control Devices

Add the following:

165.1 General Description

This work consists of providing maintenance on temporary erosion and sediment control devices, including but not limited to the following:

- Silt fence
- Sediment basins
- Silt control gates
- Check dams
- Silt retention barriers

It also consists of removing sediment that has accumulated at the temporary erosion and sediment control devices.

165.1.01 Definitions

General Provisions 101 through 150.

165.1.02 Related References

A. Standard Specifications

General Provisions 101 through 150.

B. Referenced Documents

General Provisions 101 through 150.

165.1.03 Submittals

General Provisions 101 through 150

165.2 Materials

General Provisions 101 through 150.

165.2.01 Delivery, Storage, and Handling

General Provisions 101 through 150.

165.3 Construction Requirements

165.3.01 Personnel

General Provisions 101 through 150.

165.3.02 Equipment

General Provisions 101 through 150.

165.3.03 Preparation

General Provisions 101 through 150.

165.3.04 Fabrication

General Provisions 101 through 150.

165.3.05 Construction

A. General

As a minimum, clean the sediment from all temporary erosion control devices (except sediment basins) installed on the project when one half the capacity, by height, depth or volume has been reached. Clean the sediment from all temporary sediment basins installed on a project when one third the capacity of the storage volume has been filled.

Handle sediment excavated from any erosion or sediment control device in one of the following ways:

- Remove sediment from the immediate area and immediately stabilize it to prevent the material from refilling any erosion or sediment control device.
- Place and mix it in the roadway embankment, or waste it in an area approved by the Engineer.
- Repair or replace at no cost to the Department, any erosion or sediment control devices that are not functioning properly or are damaged due to negligence or abuse.

B. Temporary Silt Fence

Maintenance of Temporary Silt Fence consists of furnishing all labor, tools, materials, equipment and necessary incidentals to remove and dispose of accumulated sediment down to the original ground line (0 % filled). Also included is the removal of sediment accumulations ("filtercake") on the fabric by tapping the fabric on the downstream side.

C. Silt Control Gates

Maintenance of Temporary Silt Control Gates consists of all labor, tools, materials, equipment and necessary incidentals to remove and dispose of accumulated sediment down to the original ground line (0% filled). When applicable, this item will include the removal of sediment accumulations on the fabric by tapping the fabric on the downstream side.

D. Check Dams (all types)

Maintenance of Temporary Erosion Control Check Dams shall consist of all labor, tools, materials, equipment and necessary incidentals to remove and dispose of accumulated sediment down to the original ground line (0% filled). This item also includes the removal of any material deposited in sump holes. When applicable, this item will include the removal of sediment accumulations on the fabric by tapping the fabric on the downstream side, or from the baled straw by similar means.

E. Silt Retention Barrier

Maintenance of Temporary Silt Retention Barrier consists of all labor, tools, materials, equipment and necessary incidentals to remove and dispose of accumulated sediment down to the original ground line (0% filled).

F. Temporary Sediment Basins

Maintenance of Temporary Sediment Basins consists of all labor, tools, materials, equipment and necessary incidentals to remove and dispose of accumulated sediment down to the original bottom of the basin. This also includes removing accumulated sediment from the rock filter and restoring the rock filter to its original specified condition and any work necessary to restore all other components to the pre-maintenance conditions.

G. Sediment Barrier (baled straw)

Maintenance of sediment barrier (baled straw) consists of furnishing all labor, tools, materials, equipment and necessary incidentals to remove and dispose of accumulated sediment down to the original ground line (0 % filled). Also included is the removal of sediment accumulations on the bales by tapping.

H. Triangular Silt Barrier

Maintenance of Triangular Silt Barrier consists of all labor, tools, materials, equipment and necessary incidentals to remove and dispose of accumulated sediment down to the original ground line (0% filled).

I. Retrofit:

Maintenance of the retrofit device consists of all labor, tools, materials, equipment and necessary incidentals to remove and properly dispose of accumulated sediment in the permanent detention pond being utilized as a temporary sediment basin. This item also includes any maintenance that is required to ensure the retrofit device is maintained per Plan details and any maintenance of the stone filter to maintain its filtering ability, including cleaning and replacement.

J. Construction Exit:

Maintenance of the construction exit consists of all labor, tools, materials, equipment and incidentals, including additional stone and geotextile fabric as required to prevent the tracking or flow of soil onto public roadways. This includes, scarifying existing stone, cleaning existing stone, or placement of additional stone.

Cleaning of the construction exit by scraping and/or brooming only will not be measured for payment.

K. Inlet Sediment Trap

Maintenance of inlet sediment traps consists of all labor, tools, materials, equipment and necessary incidentals to remove and properly dispose of accumulated sediment in the trap and/or the excavated area adjacent to the trap. It also includes any maintenance that is required to remove sediment accumulations ("filtercake") from the material selected to construct the inlet sediment trap.

165.3.06 Quality Acceptance

General Provisions 101 through 150.

165.3.07 Contractor Warranty and Maintenance

General Provisions 101 through 150.

165.4 Measurement

A. Temporary Silt Fence:

Maintenance of temporary silt fence, Type A, B, or C, is the actual linear feet (meter) of silt fence, measured in place, where sediment is removed.

B. Silt Control Gates:

Maintenance of temporary silt control gates, type I, II, III or IV, as specified on the Plans, is measured as a single unit.

C. Check Dams (All Types):

Maintenance of temporary erosion control check dams as specified on the Plans is the actual linear feet (meter) of baled straw, type c silt fence or rip rap, measured in place, where sediment is removed.

D. Silt Retention Barrier:

Maintenance of temporary silt retention barrier as specified on the Plans, is measured by the linear foot

(meter) where sediment is removed.

E. Temporary Sediment Basins:

Maintenance of temporary sediment basins as specified on the Plans, is measured as a single unit.

F. Sediment Barrier (baled straw)

Maintenance of sediment barrier (baled straw), is the actual linear feet (meter) of baled straw measured in place, where sediment is removed.

G. Triangular Silt Barrier:

Maintenance of triangular silt barrier as specified on the plans, is measured by the linear foot (meter) where sediment is removed.

H. Retrofit:

Maintenance of retrofit device at the location specified on the Plans is measured per each.

I. Construction Exit:

Maintenance of construction exit at the location specified on the Plans, or as directed by the Engineer is measured per each.

J. Inlet Sediment Trap

Maintenance of inlet sediment trap at the location specified on the Plans, or as added by the Engineer is measured per each.

165.4.01 Limits

General Provisions 101 through 150.

165.5 Payment

A. Temporary Silt Fence:

Maintenance of temporary silt fence, Type A, B, or C, is paid for at the contract unit price bid per linear foot (meter).

B. Silt Control Gates:

Maintenance of temporary silt control gates, Type I, II, III, or IV as specified on the Plans is paid for at the contract unit price bid per each.

C. Check Dams (All Types):

Maintenance of Check Dams as specified on the Plans is paid for at the contract unit price bid per linear foot (meter).

D. Silt Retention Barrier:

Maintenance of temporary silt retention barrier as specified on the Plans is paid for at the contract unit price bid per linear foot (meter).

E. Temporary Sediment Basins:

Maintenance of temporary sediment basins as specified on the Plans is paid for at the contract unit price bid per each.

F. Sediment Barrier (baled straw):

Maintenance of sediment barrier (baled straw) as specified on the Plans is paid for at the contract unit price bid per linear foot (meter).

G. Triangular Silt Barrier:

Maintenance of triangular silt barrier as specified on the Plans is paid for at the contract unit price bid per linear foot (meter).

H. Retrofit:

Maintenance of the retrofit device at the location specified on the Plans is paid for at the contract unit price bid per each.

I. Construction Exit:

Maintenance of the construction exit at the location specified on the Plans or as added by the Engineer is paid for at the contract unit price per each.

J. Inlet Sediment Trap

Maintenance of the inlet sediment trap at the location specified on the Plans or at the location specified by the Engineer is paid for at the contract unit price per each.

Payment will be made under:

Item No. 165	Maintenance of temporary silt fence Type____	per linear foot (meter)
Item No. 165	Maintenance of silt control gate Type ____	per each
Item No. 165	Maintenance of check dams (all types)	per linear foot (meter)
Item No. 165	Maintenance of silt retention barrier	per foot (meter)
Item No. 165	Maintenance of temporary sediment basin, Sta. No. ____	per each
Item No. 165	Maintenance of sediment barrier (baled straw)	per linear foot (meter)
Item No. 165	Maintenance of triangular silt barrier	per linear foot (meter)
Item No. 165	Maintenance of retrofit, Sta. No.____	per each
Item No. 165	Maintenance of construction exit	per each
Item No. 165	Maintenance of inlet sediment trap	per each

165.5.01 Adjustments

General Provisions 101 through 150.

First Use Date 2013 Specifications: March 22, 2013
Revised: March 18, 2013
Revised: October 22, 2013
Revised: May 2, 2014
Revised: September 2, 2014

DEPARTMENT OF TRANSPORTATION
STATE OF GEORGIA

SUPPLEMENTAL SPECIFICATION

Section 167—Water Quality Monitoring

Delete 167 and substitute the following:

167.1 General Description

This Specification establishes the Contractor's responsibility to meet the requirements of the National Pollutant Discharge Elimination System (NPDES) Infrastructure Permit No. GAR 100002 as it pertains to Part IV. Erosion, Sedimentation and Pollution Control Plan. In the case of differing requirements between this specification and the Permit, whichever is the more stringent requirement shall be adhered to.

167.1.01 Definitions

Certified Personnel— certified personnel are defined as persons who have successfully completed the appropriate certification course approved by the Georgia Soil and Water Conservation Commission. For Department projects the certified person must also have successfully completed the Department's WECS certification course.

Water Quality Sampling – as used within this specification, the term "monitoring" shall be inclusive of the acts of detecting, noting, discerning, observing, etc. for the purpose of gauging compliance with the NPDES General Permit GAR100002.

Qualifying Rainfall Sampling Event—as used within this specification, means that which is defined in the 2013 NPDES General Permit GAR1000002, Part IV.D.6.d(3).

167.1.02 Related References

A. Standard Specifications

Section 161—Control of Soil Erosion and Sedimentation

B. Referenced Documents

NPDES Infrastructure Permit No. GAR100002

GDOT WECS Seminar

EPD Rule Chapter 391-3-7

GSWCC Certification Level IA Course

OCGA 12-7-1

167.1.03 Submittals

General Provisions 101 through 150

167.2 Materials

General Provisions 101 through 150.

167.2.01 Delivery, Storage, and Handling

General Provisions 101 through 150.

167.3 Construction Requirements

167.3.01 Personnel

Use GSWCC level IA certified and WECS certified personnel to perform all monitoring, sampling, inspections, and rainfall data collection.

Use the Contractor-designated WECS or select a prequalified consultant from the Qualified Consultant List (QCL) to perform water quality monitoring, sampling, inspections, and rainfall data collection.

The Contractor is responsible for having a copy of the GAR100002 Permit onsite at all times.

167.3.02 Equipment

Provide equipment necessary to complete the Work or as directed.

167.3.03 Preparation

General Provisions 101 through 150.

167.3.04 Fabrication

General Provisions 101 through 150.

167.3.05 Construction

A. General

Perform inspections, rainfall data collection, testing of samples, and reporting the test results on the project according to the requirements in Part IV of the NPDES Infrastructure Permit and this Specification. Take samples manually or use automatic samplers, according to the GAR100002 Permit GAR100002. Note that GAR100002 requires the use of manual sampling or rising stage sampling for qualifying events that occur after the first instance of the automatic sampler not being activated during a qualifying event. Analyze all samples according to the Permit, regardless of the method used to collect the samples. If samples are analyzed in the field using portable turbidimeters, the monitoring results shall state they are being used and a digital readout of NTUs is what is provided. Submit bench sheets, work sheets, etc., when using portable turbidimeters. There are no exceptions to this requirement. Perform required inspections and submit all reports required by this Specification within the time frames specified. Failure to perform the inspections within the time specified will result in the cessation of all construction activities with the exception of traffic control and erosion control. Failure to submit the required reports within the times specified will result in non-refundable deductions as specified in Subsection 161.5.01.B.

B. Water Quality Inspections

The Department will provide one copy of the required inspection forms for use and duplication. Inspection forms may change during the contract to reflect regulatory agency needs or the need of the Department. Any costs associated with the change of inspection forms shall be considered incidental. Alternate formats of the provided forms may be created, used and submitted by the Contractor provided the required content and/or data fields and verbatim certification statements from the Department's current forms are included.

The Engineer shall inspect the installation and condition of each erosion control device required by the erosion control plan within seven days after initial installation. This inspection is performed for each stage of construction when new devices are installed. The WECS shall ensure all installation deficiencies reported by the Engineer are corrected within two business days.

Ensure the inspections of the areas listed below are conducted by certified personnel and at the frequencies listed. Document all inspections on the appropriate form provided by the Department.

1. Daily (when any work is occurring):

   Conduct inspections on the following areas daily:

   a. Petroleum product storage, usage, and handling areas for spills or leaks from vehicles or equipment
   b. All locations where vehicles enter/exit the site for evidence of off-site sediment tracking

   Continue these inspections until a Notice of Termination (NOT) is submitted, and use the daily inspection forms.

2. Weekly and after Rainfall Events:

   Conduct inspections on these areas every seven calendar days and within twenty-four hours after the end of a rainfall event that is 0.5 in (13 mm) or greater (unless such storm ends after 5:00 PM on any Friday or any non-working Saturday, non-working Sunday or any non-working Federal holiday in which case the inspection shall be completed by the end of the next business day and/or working day, whichever occurs first):

   a. Disturbed areas not permanently stabilized
   b. Material storage areas that are exposed to precipitation
   c. Structural control measures, Best Management Practices (BMPs) to ensure they are operating correctly
   d. Water quality sampling locations and equipment
   e. Discharge locations or points, e.g., outfalls and drainage structures that are accessible to determine if erosion control measures are effective in preventing significant impacts to receiving waters

   Continue these inspections until all temporary BMPs are removed and a NOT is submitted and use the EC-1 Form.

3. Monthly:

   Once per month, inspect all areas of the site that have undergone ~~where~~ final stabilization or have established a crop of annual vegetation and a seeding of target perennials appropriate for the region ~~has been completed~~. Look for evidence of sediments or pollutants entering the drainage system and or receiving waters. Inspect all permanent erosion control devices remaining in place to verify the maintenance status and that the devices are functioning properly. Inspect discharge locations or points, e.g. outfalls, drainage structures, that are accessible to determine if erosion control measures are effective in preventing significant impacts to receiving waters.

   Continue these inspections until the Notice of Termination is submitted and use the monthly inspection form.

C. Water Quality Sampling

When the sampling location is a receiving water, the upstream and downstream samples are taken for comparison of NTU values. When the sampling location is an outfall, a single sample is taken to be analyzed for its absolute NTU value.

D. Reports

1. Inspection Reports:
   Summarize the results of inspections noted above in writing on the appropriate Daily, Weekly, Monthly, or EC-1form provided by the Department and includes the following information:
   - Date(s) of inspection
   - Name of certified personnel performing inspection
   - Construction phase
   - Status of devices
   - Observations
   - Action taken in accordance with Part IV.D.4.a.(5) of the GAR100002 Permit
   - Signature of personnel performing the inspection
   - Any instance of non-compliance

When the report does not identify any non-compliance instances, the inspection report shall contain a statement that the best management practices are in compliance with the Erosion, Sedimentation, and Pollution Control Plan. (See the EC-1 form.)

The reports shall be made and retained at the site or be readily available at a designated alternate location until the entire site or that portion of a construction project that has been phased has undergone final stabilization and a Notice of Termination is submitted to the Georgia Department of Natural Resources Environmental Protection Division (GAEPD). Such reports shall be readily available by the end of the second business day and/or working day and shall identify all incidents of best management practices that have not been properly installed and/or maintained as described in the Plan. The inspection form certification sheet shall be signed by the project WECS and the inspector performing inspections on behalf of the WECS (if not the same person). Submit all inspection reports to the Engineer within twenty-four hours of the inspection. The Engineer will review the submitted reports to determine their accuracy. The Engineer will notify the certified personnel of any additional items that should be added to the inspection report.

Correct any items listed in the inspection report requiring routine maintenance within seventy–two (72) hours of notification or immediately during perimeter BMP failure emergencies. Deficiencies that interfere with traffic flow, safety, or downstream turbidity are to be corrected as soon as practical but in case later than seven (7) calendar days following the inspection.

Assume responsibility for all costs associated with additional sampling as specified in Part IV.D.6.d.3.(c) of the NPDES GAR100002 Permit if either of these conditions arise:

- BMPs shown in the Plans are not properly installed and maintained, or
- BMPs designed by the Contractor are not properly designed, installed and maintained.

2. Sampling Reports
   a. All sampling shall be performed in accordance with the requirements of the GAR100002 Permit for the locations identified in the ESPCP approved by the Department.

b. Report Requirements

Include in all reports, the following certification statement, signed by the WECS or consultant providing sampling on the project:

> "I certify under penalty of law that this report and all attachments were prepared under my direct supervision in accordance with a system designed to assure that certified personnel properly gather and evaluate the information submitted. Based on my inquiry of the person or persons who manage the system, or those persons directly responsible for gathering the information, the information is, to the best of my knowledge and belief, true, accurate and complete. I am aware that there are significant penalties for submitting false information, including the possibility of fine and imprisonment for knowing violations."

When a rainfall event requires a sample to be taken, submit a report of the sampling results to the Engineer within seven working days of the date the sample was obtained. Include the following information in each report:

1) Date and time of sampling
2) Name of certified person(s) who performed the sampling and analyses.
3) Date the analyses were performed
4) Time the analyses were initiated
5~~4~~) Rainfall amount on the sampling date (sampling date only)
6~~5~~) NTU of each sample & analytical method
7~~6~~) Location where each sample was taken (station number and left or right offset)
8~~7~~) Identification of whether a sample is a receiving-water sample or an outfall sample
9~~8~~) Project number and county
10~~9~~) References and written procedures, whenever available, for the analytical techniques or methods used: w hether the samples were taken by automatic sampler, rising-stage sampler, or manually (grab sample)
11) The results of such analyses, including the bench sheets, instrument readouts, computer disks or tapes, etc., used to determine these results
12~~0~~) A clear note if a sample exceeds 1000 NTUs by writing "exceeds 1000 NTUs" prominently upon the report.

b. Report Requirements with No Qualifying Rainfall Events

In the event a qualifying rainfall event does not produce a discharge to sample, or sampling is "impossible", as defined in the GAR1000002 Permit, a written justification must be included in the report as required at Part IV.D.4.a.(6) of the GAR100002 Permit.

c. Sampling Results

Provide sampling results to the Project Engineer within 48 hours of the samples being analyzed. This notification may be verbal or written. This notification does not replace the requirement to submit the formal summary to the Engineer within 7 working days of the samples being collected. The Engineer will ensure submission of the sampling report to GAEPD by the 15th of the month following the sampling results as per the GAR100002 Permit. The WECS will be held accountable for delayed delivery to the Department which results in late submissions to EPD resulting in enforcement actions.

3. Rainfall Data Reports:

Record the measurement of rainfall once each twenty-four hour period, except for non-working Saturdays, non-working Sundays and non-working Federal Holidays until a Notice of Termination is submitted. Project rain gauges and those used to trigger the automatic samplers are to be emptied after every rainfall event. This will prevent a cumulative effect and prevent automatic samplers from taking

samples even though the rainfall event is not a qualifying event. The daily rainfall data supplied by the WECS to the Engineer will be the official rainfall data for the project.

167.3.06 Quality Acceptance

General Provisions 101 through 150.

167.3.07 Contractor Warranty and Maintenance

General Provisions 101 through 150.

167.4 Measurement

Water Quality Inspections in accordance with the inspection and reports sub-sections will be measured for payment by the month up to the time the Contract Time expires. Required inspections and reports after Contract Time has expired will not be measured for payment unless a time extension is granted.

Water Quality Sampling is measured per each. "Each" means each qualifying rainfall sampling event, not each sampled site.

167.4.01 Limits

General Provisions 101 through 150. Submit the monitoring summary report to the Engineer within 7 working days

167.5 Payment

Payment for Water Quality Inspections and Water Quality Sampling will be made as follows:

Water Quality Inspections will be paid at the Contract Price per month. This is full compensation for performing the requirements of the inspection section of the NPDES Permit and this Specification, any and all necessary incidentals, and providing results of inspections to the Engineer, within the time frame required by the NPDES Infrastructure Permit, and this Specification.

Water Quality Monitoring and Sampling per each qualifying rainfall sampling event is full compensation for meeting the requirements of the monitoring sections of the NPDES Permit and this Specification, obtaining samples, analyzing samples, any and all necessary incidentals, and providing results of turbidity tests to the Engineer, within the time frame required by the NPDES Infrastructure Permit, and this Specification. This item is based on the rainfall events requiring sampling as described in Part IV.D. 6 of the Permit. The Department will not pay for samples taken and analyzed for rainfall events that are not qualifying events as compared to the daily rainfall data supplied by the WECS.

Payment will be made under:

Item No. 167	Water quality inspections	Per month

Water Quality Monitoring and Sampling will be paid per each qualifying rainfall sampling event.

Payment will be made under:

Item No. 167	Water quality monitoring and sampling	Per each

167.5.01 Adjustments

First Use Date 2001 Specification: November 18, 2005
Revised: August 9, 2006
Revised September 27, 2006
Revised: December 7, 2006
(Off System) Revised: February 22, 2007
(Off System) Revised: November 2, 2007
(Off System) Revised: December 4, 2007

DEPARTMENT OF TRANSPORTATION
STATE OF GEORGIA

SPECIAL PROVISION

Section 402—Hot Mix Recycled Asphaltic Concrete

Delete Subsection 402.5 and substitute the following:

402.5 Payment

The work performed and the materials furnished as described in this Specification will be paid for at the Contract Unit Price per ton (megagram). Payment is full compensation for providing materials, hauling and necessary crushing, processing, placing, rolling and finishing the recycled mixture, and providing labor, tools, equipment, and incidentals necessary to complete the work, including hauling and stockpiling RAP or RAS material.

Payment will be made under:

Item No. 402	Recycled asphaltic concrete ___ mm Superpave, group-blend, including bituminous materials	Per ton (megagram)
Item No. 402	Recycled asphaltic concrete ___ mm Superpave, group-blend, including bituminous materials and hydrated lime	Per ton (megagram)
Item No. 402	Recycled asphaltic concrete ___ mm Superpave, group-blend, including polymer-modified bituminous materials and hydrated lime	Per ton (megagram)
Item No. 402	Recycled asphaltic concrete ___ mm Superpave, Type__, group-blend, including bituminous materials and hydrated lime	Per ton (megagram)
Item No. 402	Recycled asphaltic concrete _____ mm mix, group-blend, including bituminous materials and hydrated lime	Per ton (megagram)
Item No. 402	_____in (mm) recycled asphaltic concrete type Superpave, group-blend, including bituminous materials	Per square yard (meter)
Item No. 402	_____in (mm) recycled asphaltic concrete type Superpave, group-blend, including bituminous materials and hydrated lime	Per square yard (meter)
Item No. 402	_____in (mm) recycled asphaltic concrete type Superpave, group-blend, including polymer-modified bituminous materials and hydrated lime	Per square yard (meter)
Item No. 402	_____in (mm) recycled asphaltic concrete _____ mm mix, group-blend, including bituminous materials and hydrated lime	Per square yard (meter)

Item No. 402	Recycled asphaltic concrete patching including bituminous materials	Per ton (megagram)
Item No. 402	Recycled asphaltic concrete patching including bituminous materials and hydrated lime	Per ton (megagram)
Item No. 402	Recycled asphaltic concrete leveling including bituminous materials	Per ton (megagram)
/Item No. 402	Recycled asphaltic concrete leveling including bituminous materials and hydrated lime	Per ton (megagram)

Asphalt Cement Price Adjustment payment or deductions will be made under:

Item No. 402	Asphalt Cement Price Adjustment	$ (+/-)

402.5.01 Adjustments

A. Determine Lot Acceptance

The control sieves used in the mixture acceptance schedule for the various types of mix are indicated below:

Control Sieves Used in the Mixture Acceptance Schedule	
Asphaltic concrete 25 mm Superpave	1/2 in., No. 8 (12.5 mm, 2.36 mm) sieves and asphalt cement
Asphaltic concrete 19 mm Superpave	3/8 in., No. 8 (9.5 mm, 2.36 mm) sieves and asphalt cement
Asphaltic concrete 12.5 mm Superpave	3/8 in., No. 8 (9.5 mm, 2.36 mm) sieves and asphalt cement
Asphaltic concrete 9.5 mm Superpave	No. 4, No. 8 (4.75 mm, 2.36 mm) sieves and asphalt cement
Asphaltic concrete 4.75 mm Mix	No. 8 (2.36 mm) sieve and asphalt cement

The Department will perform the following tasks:

1. Determine the mean of the deviations from the job mix formula per test results per lot.
2. Determine this mean by averaging the actual numeric value of the individual deviations from the job mix formula; disregard whether the deviations are positive or negative amounts.

B. Calculate Pavement Mean Air Voids

The Department will determine the percent of maximum air voids for each lot by dividing the pavement mean air voids by the maximum pavement mean air voids acceptable.

C. Asphaltic Concrete for Temporary Detours

Hot mix asphaltic concrete placed on temporary detours that will not remain in place as part of the permanent pavement does not require hydrated lime. Hot mix used for this purpose is paid for at an adjusted Contract Price.

Where the Contract Price of the asphaltic concrete for permanent pavement is let by the ton (megagram), the Contract Price for the asphaltic concrete placed on temporary detours is adjusted by subtracting $0.75/ton ($0.85/mg) of mix used.

Where the Contract price of the mix in the permanent pavement is based on the square yard (meter), obtain the adjusted price for the same mix used on the temporary detour by subtracting $0.04/yd² ($0.05/m²) per 1-in (25-mm) plan depth.

Further price adjustments required in Subsection 400.3.06, "Quality Acceptance," are based on the appropriate adjusted Contract Price for mix used in the temporary detour work.

D. Determine Lot Payment

If the Engineer determines that the material is not acceptable to leave in place, remove and replace the materials at the Contractor's expense.

E. Asphalt Cement Price Adjustment

1. Formula: The Cement Price Adjustment will be computed on a monthly basis in accordance with the following:

   PA = Price Adjustment.
   APM= the "Monthly Asphalt Cement Price" for the month the hot mix asphalt is placed.
   APL = the "Monthly Asphalt Cement Price" for the month which the project was let.
   TMT = Total Monthly Tonnage of asphalt cement computed by the Engineer based on the Hot Mix Asphaltic Concrete of the various types per ton (megagram) certified for payment.

   a. If the asphalt cement price for the month is *greater* than the asphalt cement price for the month in which the project was let:

      PA = [((APM-APL)/APL) - 0.05] x TMT x APL

   b. If the asphalt cement price for the month is less than the asphalt cement price for the month in which the project was let:

      PA = [((APM-APL)/APL) + 0.05] x TMT x APL

2. Price Adjustment Triggers: No price adjustment shall be made on any hot mix asphalt placed on projects with less than 366 calendar days from the Contract Letting Date to the specified completion date. If the Original Contract contains 366 calendar days or more the Price Adjustment Trigger shall be made for any hot mix asphalt placed from the Contract Letting Date to the specified completion date. A price adjustment shall not be made until the APM is greater than 5% above or below the APL.

3. "Monthly Asphalt Cement Price": The Department will determine and publish a "Monthly Asphalt Cement Price" based on the following formulas:

   Monthly Asphalt Cement Price = (50% x NBAP) + (50% x LBAP);

   Where;

   NBAP = "National Base Asphalt Price", (in dollars/ton) is calculated based on arithmetic average of the previous four weeks "Posted Prices Asphalt Cement" for the "East Coast Market – GA/FL" as listed in the "ASPHALT WEEKLY MONITOR®" published by "Poten and Partners" or at www.poten.com.

   LBAP = "Local Base Asphalt Price", (in dollars/ton) is based on the arithmetic average posted price of PG asphalt cement as specified in Section 820, from the Department's monthly survey obtained from approved asphalt cement suppliers of bituminous materials to the Department projects F.O.B.

the suppliers terminal. However, the highest price and the lowest price are excluded from the calculation of average price, LBAP.

4. **"Asphalt Cement Quantity Calculation":** The calculation of asphalt cement quantity for each mix type will be based on the asphalt cement content (AC %) of the approved Job Mix Formula (JMF) as specified in Subsection 400.1.03.C. The following calculation formula will be used to determine asphalt cement quantity:

   Asphalt Cement Quantity = Hot Mix Asphaltic Concrete monthly total in tons (megagrams) per mix type certified for the payment x AC (%)

   The Total Monthly Tonnage (TMT) of asphalt cement computed by the Engineer will be calculated as follows:

   TMT = Sum of all asphalt cement quantities, including polymer modified asphalt binder and non-modified asphalt cement, based on the Hot Mix Asphaltic Concrete of the various mix types per ton (megagram) certified for payment. Asphalt Cement Price for the Month (APM) will be adjusted monthly. Price adjustments (PA) will be made monthly and all calculations for Price Adjustments shall be performed by the Engineer as specified in SOP-39 "Determination of Asphalt Cement Index and Asphalt Cement Price Adjustment".

5. **"Other Restrictions":**

   a. No asphalt cement price adjustment will be made for cut-back, and emulsified asphalt when used for bituminous tack coat.

   b. There is a cap of 125% above the APL for any price adjustment.

   c. Unless specifically provided for by Supplemental Agreement or Contract Amendment, no further asphalt cement price adjustment will be made after the original Contract Time has expired. Irrespective of any other provision in the contract, for purposes of this specification, "Contract Time" does not include any time extensions or Supplemental Agreements which affect the completion of the Contract. The Asphalt Cement Price Adjustment for any hot mix asphalt placed after the original Contract Time expires will be computed based on the Monthly Asphalt Cement Price at the time the Contract Time has expired, or the Monthly Asphalt Cement Price at the time the Contract was let, whichever is less.

d. Attach weights to any geogrids that are to be placed in inundated areas to allow for placement to the required elevations or depths.

2. Placement of Geogrids: Place geogrids in a manner and at the locations shown on the Plans. Place the grids with the machine direction perpendicular to the roadway unless specified otherwise on the Plans. Place the geogrids level or sloping away from the existing embankment at an inclination that is no greater than 5°. Spread the geogrids out free of wrinkles, bends or undulation and hold the geogrids taut by wooden stakes or other mechanical means while the embankment material is being placed.

3. Fill Placement Over Geogrid: Place fill over the geogrid in accordance with the Plans and applicable portions of Section 208. Maintain at least 4 inches (102 mm) of soil between the grid and any rubber-tired construction equipment. Maintain at least 8 inches (203 mm) of soil between the grid and any track construction equipment.

4. Degree of Compaction: Compact embankment fills to at least 95 percent of the maximum laboratory dry density for the full depth of the embankment, unless otherwise specified. The Engineer may adjust compaction requirements for initial lifts of fill over unstable soils until a stable mat is formed. Determine the maximum laboratory dry density and in place density of the compacted fill in accordance with Sub-Section 208.3.05.B.2.

5. Joints or Splices: Place grids in continuous strips in the direction of main reinforcement. Do not use joints or splices in the machine direction unless the joint or splice can be shown by laboratory tests to carry 100% of the required ultimate tensile strength of the grid.

6. Damaged Material: Remove any geogrid material damaged in shipping, storage or placement from the project and replace it at no additional expense to the Department.

457.4 Measurement

Geogrid reinforcement is measured for payment in square yards (meters) of accepted geogrid materials in place for Types A, B and C. Measurement is to the nearest square yard (meters).

457.5 Payment

Geogrid reinforcement is paid for at the Contract Price per square yard (meters), for geogrid Types A, B and C, complete and in place. Payment is full compensation for furnishing materials, placing materials, and for all labor, equipment, tools and incidentals necessary to perform the Work.

Payment for work under Section 457 will be made under:

Item No. 457-1005. Geogrid Reinforcement, Type A……. Per Square Yard (Meters)

Office of Materials and Research

First Use Date 2013 Specification: May 17, 2013

GEORGIA DEPARTMENT OF TRANSPORTATION
STATE OF GEORGIA
SPECIAL PROVISION

PROJECT NO.: BRMLB-3223-00(006), BIBB

Section 500—Concrete Structures

Add the following to Subsection 500.1.02:

B. Referenced Documents

"Guide to Mass Concrete", ACI 207.1R-05.

"Report on Thermal and Volume Change Effects on Cracking of Mass Concrete", ACI 207.2R-07.

"Cooling and Insulating Systems for Mass Concrete", ACI 207.4R-05.

"Standard Practice for Selecting Proportions for Normal, Heavyweight, and Mass Concrete", ACI 211.1-91

"Control of Cracking Concrete Structures", ACI 224R-01.

"Specification of Structural Concrete", Section 8, ACI 301-10.

"Compressive Strength of Cylindrical Concrete Specimens", AASHTO T 22-10

"Making and Curing Concrete Test Specimens in the Laboratory", ASTM C192

Add the following to Subsection 500.3.05:

AM. Mass Concrete

Mass concrete is defined as "Any large volume of concrete with dimensions large enough to require that measures be taken to cope with the generation of heat and attendant volume change to minimize cracking". Any concrete element with a least dimension greater than 5ft (or greater than 6 ft for drilled shaft) shall be designated as mass concrete. The introduction of a construction joint at a dimension less than 5 ft does not ensure that the maximum temperature attained by or the differential temperature in concrete is adequately controlled. Proposals for large volume concrete shall thus be evaluated based on the heat development and a Thermal Control Plan.

a. Temperature Specifications for Mass Concrete

Mass concrete shall conform to the concrete acceptance criteria and the following temperature requirements to prevent delayed ettringite formation (DEF) and thermally induced stress cracks:

1. The maximum allowable internal temperature of mass concrete shall not exceed 140 °F.
2. The maximum temperature differential between interior and exterior portions of the designated mass concrete element shall not exceed 40 °F.
3. The maximum temperature of the concrete when delivered and prior to placement shall be 85 °F.

b. Materials Selection and Mix Design Development

Materials used for mass concrete shall conform to the provisions in Section 500-Concrete Structures of GDOT *Standard Specifications-Construction of Transportation Systems* and the following requirements. When in conflict, materials shall conform to the special provisions below rather than those in Section 500.

1. Use class F fly ash (no Class C fly ash is allowed) and/or granulated iron blast-furnace slag in all concrete designated mass concrete. Slag when used shall be between 50% to 75% by mass of total cementitious material used in the mix. Class F fly ash when used shall be between 25% to 40% by mass of total cementitious materials used in the mix. When a combination of slag and fly ash are used, the total combined content of slag plus fly ash shall be between 50% to 75% by mass of total cementitious material with the fly ash representing no more than 40% of the total cementitious content.
2. High-early-strength (ASTM C150 Type III or ASTM C1157 HE) cement, metakaolin, silica fume calcium chloride and accelerating type admixtures shall not be used.
3. A retarding admixture, pretested with the job materials under job conditions, may be permitted to prevent cold joints due to the quantity of concrete placed, as approved by the Engineer.
4. Coarse aggregate larger than #5 stone maximum size aggregate is permitted to be used for mass concrete, if approved by the Engineer.
5. Other materials and/or mix designs may be proposed to the Engineer for approval, with documentation that the proposed mix designs meet specifications for mass concrete.
6. Laboratory-designed mix proportions of materials are permitted for commonly used combinations of materials. Request these mixes in writing from the State Materials Engineer specifying the class of concrete and the source of ingredients.
7. Degree of Alkali-Silica Reactivity (ASR) of either fine or coarse aggregate is determined by testing the aggregates in ASTM C1260, or ASTM C1567 (either

expansion shall be less than 0.10% after 14 days immersion). Unless the results of petrography indicate a significant change in the composition of materials in quarries, ASTM 1293 (expansion <0.04% at 1 year) is not required to be conducted, before a mix design can be approved by the Engineer.

8. The mixture will be capable of demonstrating a laboratory compressive strength at 28 days meeting the requirements of Table 1 – Concrete Mix Table, *Subsection 500.1.03.A.* Compressive strength will be determined based upon result of six cylinders prepared and tested in accordance with AASHTO T 22 and ASTM C192.

c. Thermal Control Plan

At least 30 calendar days prior to placing any concrete defined as mass concrete, the contractor shall submit to the Engineer for approval a Thermal Control Plan. The Thermal Control Plan shall show complete analysis of the anticipated thermal developments in the mass concrete elements for all expected project temperature ranges using the proposed mix design, casting procedures and materials. As a minimum, the Thermal Control Plan shall include details about the following:

1. Concrete mix design showing composition, proportions, and sources for all components.
2. Proposed methods to control concrete temperature at time of placement, such as pre-cooling of raw materials or concrete.
3. Duration and method of curing.
4. Calculations of maximum concrete temperatures for the range of expected air, water (for underwater construction) and concrete temperatures.
5. Proposed methods to control maximum temperature during curing. A mechanical cooling system may be used to control the internal temperature of mass concrete during curing but shall be designed in conformance with the Thermal Control Plan. If a mechanical cooling system is used, the plans for the cooling system operation and final grouting after cooling shall be submitted to the Engineer for approval.
6. Calculations of maximum temperature gradients within each concrete element during curing. Calculations shall include maximum possible temperature induced tensile stress in the concrete in addition to tensile stresses at 1 day, 3 days, 7 days, 28 days, and 56 days after placement. The thermal calculation model and/or computational software shall be submitted to the Engineer for approval.
7. Proposed methods to control temperature differentials that could include insulation for the forms and exposed portions of concrete. Contractor must take actions that prevent the exterior surfaces of the concrete from getting too cool such as using insulation or heaters or by preventing the core from getting too hot.

8. Temperature monitoring and recording system, that shall consist of temperature sensors connected to a data acquisition system. The temperature sensor types and locations shall be specified.
9. Results of strength tests of sample cylinders. The concrete shall attain the specified strength at an age (28 or 56 days) as specified by the Engineer. Match curing of concrete is required. Match curing shall be conducted according to temperature history obtained using probes 6 inches from surface and at the centroid of the concrete pour.

Place no concrete until the mass concrete mix design and the proposed Thermal Control Plan is reviewed and approved by the Engineer. If concrete design mixture is changed, the thermal control plan must be updated and approved by the Engineer.

d. Temperature Monitoring and Recording System

1. Install within the concrete placed in each mass pour and in the surrounding environment of the concrete, temperature sensing devices (thermocouples) of a type approved by and at locations based on the plan approved by the Engineer.
2. The sensing system will contain as a minimum two independent sets of sensing devices in order to assure readings if one of the systems fail. The sensing devices shall be accurate to within 2°F range.
3. Thermocouples shall be placed at the centroid of the pour, or wherever the point of expected maximum temperature is anticipated. Additional thermocouples shall be placed on the exterior to monitor the maximum temperature differential.
4. The temperature monitoring and recording system for mass concrete shall consist of temperature sensors connected to a data acquisition system capable of printing, storing, and downloading data to a computer. Data shall be printed and submitted to the Engineer daily with a copy sent to Office of Materials and Testing.

e. Placing and Curing Mass Concrete

When placing and curing mass concrete do the following:

1. Maintain a temperature differential of 40 °F or less between the interior and exterior portions of the designated mass elements.
2. Monitor and maintain records of the concrete temperature, beginning with casting and continuing until the maximum temperature is reached and begins decreasing to a differential of no more than 40°F from the mean annual ambient temperature of the surrounding environment, for three consecutive days.
3. When the internal concrete temperature differential between interior and exterior concrete nears 35°F, notify the Engineer and take corrective measures immediately to retard further increase in the temperature differential to limit it to the 40°F maximum. Utilize the mechanical cooling system, if being use, to lower the internal temperature. Other active measures may include, but not limited to: chilled water for mixing, precooling aggregate stockpiles, ice for mixing water, nitrogen gas, and shade for

aggregate stockpiles. Cease placement of concrete until the temperature differential has been lowered.

4. The contractor shall suggest consolidation techniques based on the placement technique to be used for mass concrete. The consolidation technique shall be reviewed and approved by the Engineer before start of placement of mass concrete. Slump tests or slump-flow (ASTM C 1611) tests, as applicable, shall be used to provide quality control from batch to batch.
5. Maintain a minimum concrete placement rate of 30 cubic yards per hour or as designated on the plans or in the Special Provisions. Any requested change from this placement rate is to be approved by the Engineer.

f. Acceptance

Mass concrete shall conform to the concrete acceptance criteria and the temperature requirements as stated earlier to prevent delayed ettringite formation (DEF) and thermally induced stress cracks.

If the Contractor fails to conform to any of the above temperature requirements in any one pour, any additional mass concrete pours will cease. The Engineer may, at its sole discretion, direct that the concrete be removed or otherwise mitigated, at no cost to the Department. The contractor shall revise the Thermal Control Plan and design calculations to correct the problem and resubmit the revised Thermal Control Plan. Mass concrete placement shall not begin until the Engineer has approved the revised Thermal Control Plan. No extension of time or compensation will be made for any rejected mass concrete element or revisions of the Thermal Control Plan.

Office of Materials and Testing

Date: October 24, 2014
First Use Date: August 1, 2013

DEPARTMENT OF TRANSPORTATION
STATE OF GEORGIA
SPECIAL PROVISION

PROJECT NO. BRMLB-3223-00(006) BIBB COUNTY

P.I. NO. 351095

Section 511 – Reinforcement Steel

Add the following to 511.2 Materials, B. Fabrication:

2. **Reinforcement Steel Couplers.** When couplers are indicated on the Plans, use mechanical butt splices from an approved source listed on QPL 93.

   Provide mechanical butt splices which develop a minimum of 125% of the guaranteed yield strength of the reinforcing steel to be spliced. Limit the total slip of the reinforcing bars within the splice sleeve after loading to 30 kips per square inch (207 MPa) and relaxing to 3 kips per square inch (21 MPa) to no more than the following, as measured between gauge points clear of the splice sleeve: 0.010 of an inch (.25mm) for reinforcing bars no. 14 (43) or smaller, or 0.030 of an inch (.76mm) for reinforcing bars no. 18 (57).

   Prior to installation on GDOT projects, the contractor is required to submit job-control samples for testing to the Office of Materials and Testing. This is to ensure that the installer is qualified to construct the units. Make test specimens in the presence of the Engineer or his authorized representative using reinforcing steel consigned for the work. A test specimen consists of a splice made at the job site to connect two 24 inch (600mm) or longer bars using the same splice materials, position, location, and equipment, and following the same procedures to be used to make splices in the work. Prior to incorporating couplers into the work, make and test three specimens that meet the above criteria.

   Perform all testing required above by the Office of Materials and Testing or at a testing laboratory approved by the Department.

   If threaded couplers are used, equip them with approved devices which will prevent rotation after installation.

   After installation, clean all couplers with a power wire brush or by other approved methods and recoat the couplers with a material prepared and recommended by the coating manufacturer.

   Install the couplers in strict accordance with the manufacturer's instructions and as approved by the Engineer.

   All costs for the couplers, test samples (including reinforcing steel for tests) and testing of couplers shall be included in the costs of reinforcing steel.

Revised 01/19/2012

DEPARTMENT OF TRANSPORTATION
STATE OF GEORGIA

SPECIAL PROVISION

PROJECT NO. BRLMB-3223-00(006), Bibb County
P.I. NO. 351095

SECTION 524 – DRILLED CAISSON FOUNDATIONS

524.1 General Description

This Work consists of furnishing all labor, materials, equipment, tools and services necessary for construction of drilled caisson foundations and includes all incidentals and additional work in conjunction therewith. Adhere to the Department's Plans, Special Provisions and Standard and Supplemental Specifications for all Work.

524.2 Materials

Use materials that meet the requirements of the Standard Specifications with the following exceptions:

- Use non-air-entrained Class AA concrete with a coarse aggregate size of No. 67 stone and a slump at time of placement of between 7 and 9 inches (178 mm and 229 mm). Use 10 percent additional cement and a retarder or water reducing agent in all concrete.
- Use Grade 60 (Grade 420) reinforcing bars that conform to ASTM 615 (ASTM A 615M). If wire spirals are used, use spirals that conform to ASTM A 82.
- Use Grade 2 steel casing that conforms to ASTM A 252.

524.3 Construction Requirements

524.3.01 Personnel

Construct drilled caissons and supervise the work with personnel who are experienced in this type work. Visit and examine the work site and all conditions, and take into consideration all such conditions that may affect the work. At least 30 days prior to beginning drilled caisson work, submit

to the Engineer for review and approval the following proof of the ability of the personnel to construct drilled caisson foundations:

1. Evidence of the successful completion of at least five projects similar in concept and scope to the proposed foundation. Include names, addresses and telephone numbers of the owners' representatives for verification.
2. Résumés of foreman and drilling operators to be employed on this project. Provide evidence showing that the drill operator has experience and knowledge of the drill rig to be used on the project. The Department will be sole judge of the qualifications of the foreman and drill rig operator.
3. A detailed sequence of construction for drilled caisson work that describes all materials, methods and equipment to be used, including, but not limited to the following:
    - casing sizes with proposed top and tip elevations
    - drilling equipment including the manufacturer's specifications on the drill rig
    - methods and equipment for stabilizing and cleaning shaft excavations
    - methods of materials handling and disposal
    - methods and equipment for placing concrete
    - details of tremie and sealing methods, if required
    - details of reinforcement placement, including support and centralization methods

Do not begin drilled caisson construction until the qualifications, construction plan and methods have been approved in writing by the Engineer.

524.3.02 Equipment

Use excavation and drilling equipment with a rated capacity (including power, torque and downward thrust) to excavate a caisson of the maximum specified diameter to a depth of 30 feet (9.1 meters) or 20 percent deeper than the deepest caisson indicated on the Plans, as measured from the ground or water surface elevation, whichever is higher.

524.3.03 Casing

Use casing that is a metal shell of a thickness to withstand handling, internal and external pressures, and that is watertight, smooth and clean. If the elevation of the top of the caisson is below ground level or water level at the time of concrete placement, use an oversize casing from ground elevation to a point below the top of the caisson to prevent caving into the fresh concrete. Do not allow the top of the permanent casing, if required, to extend above the top of the drilled caisson. Use casing in all materials that do not have sufficient strength to safely remain open and stable during and after excavation.

When casing is used, do not use casing with an outside diameter less than the specified diameter of the caisson. That portion of the caisson below the casing may be slightly smaller than the normal outside diameter of the caisson. However, use drilling tools to excavate the caisson below the casing that are no smaller than the outside diameter of the casing minus 2 inches (51 mm). Do not leave casing in place unless permitted by the Engineer, and cut off any permanent casing as shown on the Plans.

Provide adequate equipment during concrete placement to prevent pulling up the reinforcing cage during casing extraction. The casing may be pulled in partial stages. Maintain a sufficient head of concrete above the bottom of the casing to overcome hydrostatic pressure. Extract the casing at a slow uniform rate with pull in line with the center of the caisson.

524.3.04 Protection of Existing Structures

Monitor structures for settlement that are within a distance of ten shaft diameters or the estimated shaft depth, whichever is greater, in a manner approved by the Engineer. Record elevations to an accuracy of 0.01 foot (3 mm). Record elevations before construction begins, during the driving of any required casings, during excavation or blasting, or as directed by the Engineer.

Document thoroughly the condition of the structures with descriptions and photographs made both before and after drilled caissons are constructed. Document all existing cracks, and provide copies of all documentation to the Engineer.

At any time settlement of 0.05 foot (15 mm) or damage to the structure is detected, immediately stop the source of vibrations, backfill any open drilled shaft excavations and contact the Engineer for instructions.

524.3.05 Excavation

Drill and excavate all caissons through whatever substances and to the elevations required. Excavate near the tip elevation in the presence of the Engineer. The Engineer may adjust the tip elevations depending on the quality of the bearing material found. Embed the caisson tips 6.6 feet (2.0 meters) into and on top of sound rock in accordance with Plan requirements and as determined by the Engineer. Sound rock is indicated by material that cannot be drilled with a conventional earth auger, and requires the use of special rock augers, core barrels, air tools, blasting and/or other methods of hand excavation. Sound rock is defined as material on which the rock auger penetration is equal to or less than 2 inches (51 mm) per five minutes of drilling with the auger subjected to a torque of 600,000 inch-pounds (67,791 kN-m) with a down thrust of 37,000 pounds (165 kN). There will be no additional compensation for removal of rock.

The Engineer will inspect the bottom of each caisson prior to setting the reinforcing cage and placing concrete. Obtain the Engineer's approval prior to placing the reinforcing cage. Remove water, sediment and debris from the bottom of the caissons to allow for a down-hole inspection. Bore the bottom of the caisson excavation a minimum of 6 feet (1.8 meters) into rock as outlined in Specification 211.3.05.C, "Boring of Foundations and Seals". The Engineer will make a determination of the soundness and consistency of the rock and may adjust the tips of the caissons based on this information.

Where drilled caissons are located in other than open water areas, use casings or other methods approved by the Engineer to stabilize the excavation and control the hole size. When casing is not specifically required on the plans, fill in any over-excavations with Class AA concrete at no additional cost to the Department. Dispose of excess concrete, grout, displaced water and materials removed from the caisson excavation in areas approved by the Engineer, and in accordance with any Federal, State, or local code or ordinance. Verify the accuracy and existence of all applicable codes, ordinances or other regulations prior to disposing materials.

524.3.06 Reinforcing Steel

Assemble a cage of reinforcing steel and place it as a unit immediately prior to concrete placement. Assemble the cage so that the clearance between the cage and side of the caisson will be at least 5 inches (127 mm), and the clearance between the cage and bottom of the caisson will be 3 inches (76 mm).

If the caisson is lengthened, extend all reinforcement to within 3 inches (76 mm) of the bottom. If a splice is required, place it in the lower one-third of the caisson, or as shown on the Plans. Tie hoops or spirals to the caisson and column steel (vertical bars) at 100% of the junctions with double wire figure-eight ties. Do not weld the reinforcing steel. Support the cage from the top in a concentric manner to minimize its slumping downward during concrete placement and/or extracting the casing.

Check the elevation of the top of the steel cage before and after casing extraction. Any upward movement of the steel not exceeding 2 inches (51 mm) or any downward movement thereof not exceeding 6 inches (152 mm) will be acceptable. Any upward movement of the concrete or displacement of the steel beyond the above limits will be cause for rejection. Tie and support the reinforcing steel in the caisson so that the reinforcing steel will remain within allowable tolerances. In uncased caissons, use only heavy-duty plastic rollers (wheels). In cased caissons, use heavy-duty non-corrosive plastic rollers (wheels) or steel chairs. Place rollers at maximum intervals of 8 feet (2.4 meters) along the cage to ensure concentric spacing for the entire cage length. Use one roller for each one foot (305 mm) of diameter of the cage, with a minimum of four rollers at each interval. Do not use concrete spacer blocks. Use rollers that are constructed of a material approved by the Engineer and that have sufficient bearing surface to provide lateral support to the reinforcing cage.

Use rollers of adequate dimension to provide the annular spacing between the outside of the reinforcing cage and the side of the excavated hole or casing as shown on the Plans. If an oversize casing is used, use rollers that will provide concentric spacing. Use pre-cast concrete or heavy-duty plastic bottom supports (feet/boots) to provide a spacing of 3 inches (76 mm) between the cage and caisson bottom.

524.3.07 Concrete

Mix and place all concrete in accordance with Section 500 of the Specifications where applicable and the requirements herein stated.

Place concrete as soon as possible after all excavation is completed and reinforcing placed and supported. Place concrete continuously in the caisson to the top elevation of the caisson. The

Engineer may allow free falling of concrete to a maximum of 60 feet (18.3 meters), if satisfactory methods are demonstrated.

If ground water is encountered and the hole can not be pumped dry, or if the Engineer does not approve free fall of concrete, place concrete using a gravity feed watertight tremie. Use a tremie pipe of at least 8 inches (203 mm) in diameter with a concrete hopper at the top. The Engineer may allow concrete to be placed by pumping through a supply line if satisfactory methods are demonstrated. If this method is allowed, use pump supply lines with watertight couplings. Seal the end of the pump line with a foam plug or other device approved by the Engineer to prevent concrete within the tremie or pump supply line from mixing with fluid in the excavation.

If a tremie is used, place it on the bottom of the excavation at the beginning of concrete placement, and keep it there until the tremie pipe and hopper are filled with concrete. Then raise the tremie only enough to induce concrete flow and do not lift the tremie further until the discharge end is immersed at least 10 feet (3.1 meters) into the deposited concrete. If concrete placement by pumping is used, secure the supply line in place so that the discharge end will not lift off the bottom of the excavation more than 6 inches (152 mm) until at least 10 feet (3.1 meters) of concrete has been placed. Embed the discharge end of the tremie or pump supply line a minimum of 10 feet (3.1 meters) in the concrete throughout the remainder of the concrete pour.

Complete the placement of all concrete in the caisson in two hours. Adjusted the retarder or water reducing agent as approved by the Engineer for the conditions encountered on the job so the concrete remains in a workable plastic state throughout the pour.

Prepare and cure the top surface of the construction joint in accordance with the requirements of Section 500. Locate construction joints as indicated on the Plans.

Do not place concrete under water in the caisson excavation without the permission of the Engineer. When permission is granted, place the concrete in accordance with the requirements of Section 500. Provide a sump to channel displaced water away from the caisson. Contain all displaced water to prevent water from entering into any body of water.

During the twenty-four hour period immediately following the completion of the placement of concrete in the caisson, do not install or extract casing within 50 feet (15.2 meters) of the completed caisson, and do not excavate any caissons within 15 feet (4.6 meters) of the completed caisson. If the Engineer determines that any construction adversely affects the recently constructed caisson, cease such activities immediately.

Protect any portion of drilled caissons exposed to a body of water from the action of water by leaving the forms in place for a minimum of seven days after pouring the concrete. Remove the forms prior to 7 days only if the concrete strength has reached 3000 psi (20.7 Mpa) or greater as tested by cylinder breaks.

524.3.08 Inspection and Safety

1. Check the dimensions and alignment of the caisson excavation under the observation of the Engineer.

2. Provide, use and maintain in good working order the following safety devices for the purpose of entering the caisson excavation for cleaning or inspection work:

a. A safety harness attached to a separate safety line.

b. OSHA-approved personnel lifting devices. Do not suspend any crane weights, blocks or other heavy weights above the head of any person entering the caisson excavation.

c. Approved gas-testing equipment that tests for both oxygen level and percent explosion level. Provide and use an approved blower for fresh air if the testing equipment indicates the need.

d. Casing of adequate thickness, size and depth to safely support the excavation.

e. Non-electric pump(s) to adequately remove water from the excavation.

In addition, prior to entering the excavation, remove all loose and unnecessary objects from around the top of the caisson. Secure any caissons that will not be immediately poured after inspection and approval to prevent persons or objects from falling into the excavation.

524.3.08 Tolerances

Adhere to the following construction tolerances for drilled caissons:

1. Construct the drilled caisson to within 3 inches (76 mm) of the plan position plane, at the top-of-caisson elevation. Adhere to a vertical alignment tolerance of ¼-inch per 12 inches (6 mm per 305 mm) of depth.

2. Place reinforcement in accordance with the requirements of Section 511 of the Standard Specifications and Sub-section 524.3.06. Tie column steel (vertical bars) to hoops and spirals at 100% of the junctions with double wire figure-eight ties.

3. Placed vertical caisson reinforcing bars, including bars extending into columns or footings to within ½-inch (13 mm) of plan location. Place hoops or spirals to within 1 inch (25 mm) of their specified location. Adhere to a side form clearance of within ¼-inch (6 mm) of plan requirements.

4. Place the construction joint of the top of caissons used as caisson/column intermediate bents to within a tolerance of plus or minus 3 inches (76 mm) of the plan elevation.

524.4 Acceptability

In the event that significant voids are suspected in the concrete that were created during placement, verify the integrity of the caisson using a method that has been approved by the Engineer. If the caisson in question is found to be structurally deficient or out of tolerance in any way, the caisson will not be accepted unless corrective measures as approved by the Engineer are accomplished. Furnish additional materials and work necessary to effect corrections at no cost to the Department and with no increase in contract time.

524.5 Measurement

The length of accepted caisson foundation is measured in linear feet (meters) of caisson in place in the completed work. The length is measured from the final approved bottom elevation to 1 foot (305 mm) above the bottom of the footing cap where caissons are used in a footing or to the top of the caisson elevation detailed in the plans.

524.6 Payment

Drilled in place caisson foundations is paid for at the unit price bid per linear feet (meters) complete and in place as specified. The payment is full compensation for all excavation, furnishing and placement of reinforcing steel and concrete in the caisson, all temporary and permanent casing, disposal of excavated materials, and the cost of furnishing all tools, safety devices, labor, equipment and all other necessary items to complete the work.

Payment will be made under:

Item No. 524 DRILLED CAISSON_____INCHES (mm) DIA.....PER LINEAR FOOT (METER)

Office of Materials and Testing

February 24, 2011

DEPARTMENT OF TRANSPORTATION
STATE OF GEORGIA

SPECIAL PROVISION

P.I. Number: 342080, 351090, 351095
BIBB COUNTY

Section 615 – Jacking or Boring Pipe

(Directional Boring)

Delete Section 615 as written and substitute the following:

615.1 General Description

This work shall consist of installing various sizes of bores by directional boring through whatever materials may be encountered.

615.1.01 Definitions

General Provisions 101 through 150.

615.1.02 Related References

A. Standard Specifications

Section 205—Roadway Excavation

Section 208—Embankments

B. Referenced Documents

General Provisions 101 through 150.

615.1.03 Submittals

Furnish, for the Engineer's approval, a plan showing the proposed methods for the installation of the horizontal directional bore. The Engineer will review the proposed installation plan within 10 working days of receipt by the Department. No directional boring work will be allowed until the Contractor's submitted plan is approved by the Engineer. This plan shall include the following detail as a minimum:

- List of projects completed by the company performing the boring operation, environment of installation (urban work, river crossing, freeway), diameter of product installation and length of bores. This list of projects must include the name, address and phone number of an owner's representative with knowledge of the performance of the work. Provide at least five previously completed projects of similar scope as the boring work included in this contract.
- List of the Contractor's key personnel with a resume of boring experience. The Department will be the sole judge of the qualifications of the foreman and the drill operators.
- Location of all proposed boring entry and exit pits.
- Proposed alignment of bore both horizontal and vertical. The proposed alignment shall maintain a minimum clearance of 18 inches (450 mm) or 2 times the diameter of the final product installation,

whichever is greater, at any obstruction. Boring will not be allowed in select backfill areas such as at mechanically stabilized wall locations.

- Proposed diameter of bore. This diameter is the diameter of the final product installation.
- Proposed diameter of pilot borehole.
- Proposed diameter of back reamer. In no case shall the diameter of the back reamer exceed 1.5 times the diameter of the final product installation.
- Proposed depth of cover. The depth of cover shall be equal to or greater than 10 times the diameter of the final product installation. Additionally, the minimum depth of cover allowed in paved shoulders shall be 4 feet (1.22 meters). The minimum depth of cover under travel lanes or otherwise outside of the paved shoulder shall be 8 feet (2.44 meters).
- Evaluation of soil conditions to be encountered. Full soil survey not required. As a minimum, excavate the entrance and exit pits for the proposed bore and determine the nature of the material likely to be encountered. The drilling fluid composition should be based on the evaluation of the materials encountered in the bore pit excavation.
- Proposed composition of drilling fluid.
- Proposed drilling fluid pressure and flow rates.
- Proposed drilling fluid management plan.
- Proposed pull back rate.
- Type of tracking system.

615.2 Materials

Use conduit types and sizes that conform to the Plans and the following:

a. **Material**	b. **Section**
1. Electrical Wire, Cable, and Conduit	2. 682

615.3 Construction Requirements

Suitable pits or trenches shall be excavated for the boring operation and for placing end joints or termination connectors of conduit when required. Pits or trenches shall be securely sheeted and braced where necessary to prevent caving.

Where directional boring is required under railroads, highways, streets or other facilities, construction shall be done in the manner that will not interfere with the operation of the facility, and shall not weaken the roadbed or structure. No roadway pavement, subgrade, roadbed, paved shoulder, or unpaved median shall be disturbed or excavated as part of the boring or pipe placing operation for any reason without written authorization by the Engineer. In the above areas, any broken or damaged boring rod/stem, boring head (including transmitter/transponder locating heads and cutter heads), couplings (including backreaming, swivel or connector couplings), or any other material that cannot be retrieved as part of the pullback operation shall become the property of the Department and shall be abandoned in place unless otherwise authorized in writing by the Engineer. There shall be no additional payment for abandoned material.

Continuously monitor the location and alignment of the pilot drill progress to insure compliance with the proposed installation alignment and to verify depth of the bore. Monitoring shall be accomplished by manual plotting based on location and depth readings provided by the locating/tracking system or by computer generated bore logs which map the bore path based on information provided by the locating/tracking system. Readings or plots shall be obtained on every drill rod and provided to the Engineer on a daily basis for as-builts.

Monitoring of the drilling fluids such as the pumping rate, pressures, viscosity and density during the pilot bore, back reaming, and/or pipe installation stages shall be undertaken to ensure adequate removal of soil cuttings and to

ensure that the stability of the borehole is maintained. Drilling fluid pressures should not exceed that which can be supported by the overburden (soil) pressure to prevent heaving or a hydraulic fracture of the soils. Excess drilling fluids shall be contained at the entry and exit points until recycled or removed from the site. Ensure that all drilling fluids are disposed of in a manner acceptable to the appropriate local, state and federal regulations. The Contractor's work will be immediately suspended whenever drilling fluids seep to the surface other than in the boring entrance or exit pit. The Contractor must propose a method to prevent further seepage and must remove and dispose of any drilling fluid on the surface prior to resuming the boring operation.

To minimize heaving during pullback, the pullback rate should be determined to maximize the removal of soil cuttings and minimize compaction of the ground surrounding the borehole. The pullback rate shall also minimize over cutting of the borehole during the back reaming operation to ensure that excessive voids are not created resulting in post installation settlement. Any surfaces damaged by the work shall be restored to their preconstruction conditions. All costs associated with the restoration are to be borne by the Contractor.

The distance that the excavation extends beyond the end of the bore will depend upon the character of the excavated material, but shall not exceed 2 feet (0.61 meters) in any case. This distance shall be decreased on instructions from the Engineer if the character of the material being excavated makes it desirable.

Once the directional boring is begun, the operation shall be carried on without interruption, insofar as practical.

The pits or trenches excavated to facilitate boring operations shall be backfilled immediately after the boring has been completed.

The boring shall proceed from a surface staging area provided for the boring equipment and workers. The location of the staging area shall be approved by the Engineer. The holes shall be bored mechanically. Excavated material will be placed near the top of the working pit and disposed of as required. The use of water or other fluids in connection with the boring operation will be permitted only to the extent necessary to lubricate cutting. Jetting will not be permitted.

Excavation will not be paid for separately, but all of the provisions of Section 205 and 208 shall govern.

In unconsolidated soil formations a gel-forming colloidal drilling fluid consisting of at least 10% high grade carefully processed bentonite may be used to consolidate excavated material, seal the walls of the hole, and furnish lubrication for subsequent removal of material and immediate backreaming/installation of conduit. Flow pressure on the drilling fluid shall be continuously monitored and maintained at the minimal pressure required to place the fluid. At no time shall the flow pressure exceed 500 psi (3448 k Pa) and should normally not exceed 200 psi (1379 k Pa). All drilling fluid spoils shall be completely removed from both ends of the bore and properly disposed of at a location provided by the Contractor.

Allowable variation from line and grade established by the Engineer shall be a maximum of 2 percent. Any voids which develop during the installation operation and are determined by the Engineer to be detrimental to the Work, shall be pressure grouted with an approved mix.

Directional boring operations inherently include the risk of encountering under grade obstructions that begin to alter the bore direction. Should an obstruction be encountered, the Engineer shall be notified immediately. Attempts at corrective measures to restore the proper bore alignment should include but are not limited to boring deeper or shallower (if minimum pipe depth can be maintained), moving the boring head to the right or left of the obstruction, or attempt to bore through the obstruction (if other than solid rock). To restore the bore alignment, a minimum of three attempts shall be made to the Engineer's satisfaction at each encountered obstruction with different corrective measures. If a suitable bore alignment cannot be restored, the Engineer may authorize a relocation of the bore. Unsuccessful boring attempts shall be paid in accordance with Sections 615.4 and 615.5 below, using the obstruction location as one end of the measured length of directional boring.

615.4 Measurement

Directional bores will be measured by the horizontal linear foot (meter) of bore complete in place. The measurement for payment shall be determined by obtaining measurements from the points at which the bore arrives at the required minimum acceptable depth, at the entrance and exit of the boring operation, following the central axis of the bore. Directional boring above the minimum acceptable depth shall not be measured for payment.

615.5 Payment

This work performed and materials furnished as prescribed by this Item, measured as provided under Measurement will be paid for at the Contract Price per linear foot (meter) for Directional Boring of the size of bore specified, which shall be full compensation for furnishing the bore and all incidentals necessary to complete the Item. All excavated material resulting from the directional boring operations shall be disposed of or used as directed by the Engineer at no additional cost to the Department.

Payment will be made under:

Item No. 615-	Directional Bore Pipe (Size)	Per linear foot (meter)
Item No. 615-	Directional Bore (Size)	Per linear foot (meter)

615.5.01 Adjustments

General Provisions 101 through 150.

OFFICE OF TRAFFIC SAFETY AND DESIGN

Revised August 22, 2014

DEPARTMENT OF TRANSPORTATION
STATE OF GEORGIA

STP00-3223-00 (002), STP00-3223-00 (004), BRMLB-3223-00 (006)
P.I. NUMBERS 342080, 351090 & 351095
Widening & Bridge Replacement – Jeffersonville Rd from Walnut Creek to Recreation Rd & Millerfield Rd to Bristol Dr;
Widening/Reconstruction – Jeffersonville Rd from SR 19/Emery Hwy to Walnut Creek
Jeffersonville Rd @Walnut Creek
MACON-BIBB COUNTY

SUPPLEMENTAL SPECIFICATION

Section 647—Traffic Signal Installation

Delete Section 647 and substitute the following:

647.1 General Description

This work consists of furnishing materials and erecting a traffic signal installation including all traffic signal equipment, poles, bases, wires and miscellaneous materials required for completion of the installation. Ramp Meters are defined as a form of traffic signalization and all general provisions for traffic signalization are applicable unless otherwise noted in the Plans and Specifications.

It also includes all test periods, warranties and guarantees as designated in subsequent sections, and response to maintenance and operational issues as described in subsequent sections.

Apply for, obtain and pay for all utility services, communications services to, and pole attachment permits required by all utility owners that are necessary for the signal installation and operation required in the Plans. The Contractor will be responsible for establishing utility services and ongoing monthly costs related to utility services until final acceptance of the signal project.

Upon completion of a successful "burn in" or operational testing period for the signal installation, the Contractor will be responsible for an orderly and uninterrupted transfer of these services and permits to the local government or other jurisdiction that will be responsible for subsequent maintenance and operation.

647.1.01Definitions

General Provisions 101 through 150.

647.1.2 Related References

A. Standard Specifications

Section 106—Control of Materials

Section 107—Legal Regulations and Responsibility to the Public

Section 108 —Prosecution and Progress

Section 150 —Traffic Control

Section 500—Concrete Structures

Section 501—Steel Structures

Section 535—Painting Structures

Section 615—Jacking or Boring Pipe

Section 631—Changeable Message Signs

Section 636 – Highway Signs

Section 639—Strain Poles for Overhead Sign and Signal Assemblies

Section 645—Repair of Galvanized Coatings

Section 680—Highway Lighting

Section 681—Lighting Standards and Luminaires

Section 682—Electrical Wire, Cable, and Conduit

Section 700—Grassing

Section 755—Electrical Work

Section 800—Coarse Aggregate

Section 801—Fine Aggregate Section 832—Curing Agents

Section 833—Joint Fillers and Sealers

Section 850—Aluminum Alloy Materials

Section 852—Miscellaneous Steel Materials

Section 853—Reinforcement and Tensioning Steel

Section 854—Castings and Forgings

Section 861—Piling and Round Timber

Section 870—Paint

Section 886—Epoxy Resin Adhesives

Section 910—Sign Fabrication

Section 911—Steel Sign Posts

Section 912—Sign Blanks and Panels

Section 913—Reflectorizing Materials

Section 915—Mast Arm Assemblies

Section 922—Electrical Wire and Cable

Section 923—Electrical Conduit

Section 924—Miscellaneous Electrical Materials

Section 925—Traffic Signal Equipment

Section 926 – Wireless Communication Equipment

Section 927 – Wireless Communication Installation

Section 935—Fiber Optic System

Section 936—CCTV System

Section 937—Video Detection System

Section 939—Communications & Electronic Equipment

Section 940—Navigator Integration

B. Referenced Documents

National Electrical Manufacturers Association (NEMA) Traffic Control Systems Standards No. TS 1

NEMA Traffic Control Systems Standards No. TS 2

AASHTO Roadside Design Guide

The Manual on Uniform Traffic Control Devices (MUTCD), current edition

National Electrical Code

National Electrical Safety Code (NESC)

GDT 7 Determining Maximum Density of Soils

GDT 24a Determining the Theoretical Minimum Dry Density of Soils or Soil Aggregates containing > 45% Retained on the No. 10 Sieve

GDT 24b Determining the Theoretical Minimum Dry Density of Soils or Soil Aggregates containing > 5% Retained on 2-Inch Sieve using a 5.5 Pound Rammer and a 12 Inch Drop

GDT 67 Family of Curves Method for Determining Maximum Density of Soils

647.1.3 Submittals

Use only equipment and materials that are on the Department's Qualified Products List (QPL

These products have been evaluated by the Office of Traffic Operations and have proven their capability of meeting the appropriate Georgia Department of Transportation Specification. Any of these products may be used without sampling or pre-testing. The Contractor shall submit a letter to the Field Engineer, stating which QPL items they will use.
Submittal letter shall include QPL number and product description.. The Field Engineer and/or department designee must ascertain that the construction item is the same material identified on the appropriate QPL and will acknowledge receipt of these items in the project diary or as required by the Construction manual.

Written approval is required from the State Traffic Engineer or District Engineer prior to beginning any work on the traffic signal installation and /or installing the proposed on the work site.

A. Review

For all traffic signal material submittals, the Engineer's review of the material should be completed within forty five (45) days from the date of receipt of the submission unless otherwise specified. The State Traffic Engineer or District Engineer will advise in writing, as to the acceptability of the material submitted.

The State Traffic Engineer or District Engineer may determine that submitted equipment is approved, in which no further action is required. In the event, materials submitted for use are rejected the Contractor is required to re-submit materials, within fifteen (15) days of notification of material failure or rejection. Resubmittal of subsequent materials for review will be considered the start point of a new approval cycle as described.

The Department reserves the right to be reimbursed by the Contractor for reviewing any equipment and/or component submittals after a second submittal of equipment proposed for use on the project.

B. Submittal Costs

No separate measurement or payment will be made for submittal costs. All costs associated with reproduction of submittal material documents, samples and mailing expensed will be the responsibility of the Contractor and are not subject to reimbursement by the Department. All submittal material becomes the property of the Department and will not be returned to the Contractor.

C. Steel Strain Pole, Concrete Strain Pole or Steel Pole Certification

Instruct the supplier or manufacturer of the strain poles or steel poles with traffic signal mast arms to submit a certification, including mill certificates to:

Department of

Transportation Office of

Materials and Research

15 Kennedy Drive

Forest Park, Georgia 30297

Include the following in

the certification:

- A statement that the items were manufactured according to the Specifications, including the Specification Subsection number
- Project number and P.I. number

Instruct the supplier or manufacturer to send copies of the transmittal letter to the Engineer.

Prepare Shop Drawings and related signal strain pole design calculations with the following criteria, 5% sag and 18 foot signal head height. Provide "bending moment at yield" to determine the foundation size according to the signal strain pole foundation drawings. Submit all Shop Drawings and related signal strain pole design calculations to the Traffic Engineer. The Traffic Engineer will forward to the State Bridge and Structural Design Engineer for review and approval. Obtain written approval prior to pole fabrication and installation. Upon acceptance of the pole certification provide one copy of the design calculations and shop drawings to the agency responsible for maintaining the traffic signal installation.

All pole drawings shall include roadway and pole elevations.

Show all dimensions and material designations of the designs on the Drawings. See Subsection 501.1.03 for the certification procedure for poles and anchor bolts.

D. Signal Item Certification

Only Equipment and/or material on QPL shall be submitted for certification. All others will be rejected. Submit four (4) copies of material catalog product numbers and descriptions to the Engineer. One copy of all submittals is to be provided to the maintaining agency. Reference the project number, P.I. number, and QPL number, for the following traffic signal items:

- Signal heads
- LED Signal Modules
- Mounting hardware
- Controllers
- Cabinet assemblies
- Battery Backup System (BBS)
- Detectors
- Monitors (conflict/IVDS)
- Cable
- Load switches
- Blank-out signs
- Lane use signals
- Preformed cabinet bases
- Other related signal equipment (including but not limited to Conduit, Pull boxes, Ground Rods, Enforcement Indications, etc.)

E. Test Results Submittal

Submit the results of the testing of the following items to the Engineer. A copy of the test result submittals shall be provided to the maintaining agency.

- Loop Detector Testing
- Signal Cable Testing
- Interconnect Cable Testing
- Pre-emption Testing
- Controller and Cabinet Testing from Manufacturer (Including conflict monitor)
- Traffic Signal Monitor
- Any other operational testing required by the Engineer

F. Mast Arm Pole Chart

For locations with mast arm pole installations, submit a "Mast Arm Pole Chart" for review and approval by the State Bridge and Structural Design Engineer. The "Mast Arm Pole Chart" shall also include a sketch on an 8 ½ inch x 11 inch (216 mm x 279 mm) sheet of paper showing the following:

- Curb lines
- Location of mast arm pole based on utility information and field location verified by Contractor. (Final location of mast arm pole must meet the criteria for setback from the road as specified in the Roadside Design Guide by AASHTO and in the Standard Detail Drawings.
- Distance from both adjacent curbs to mast arm pole
- Distance along mast arm from pole to curb and from curb to each proposed signal head
- Directional arrow
- Street names
- Position of Luminaries

Label the sketched distances. Once this pole chart is approved, the Contractor shall use the distances measured to the proposed signal head locations when ordering the mast arm to ensure that the mast arm is fabricated with holes for signal head wiring in the correct locations.

647.2 Materials

647.2.01 Delivery, Storage, and Handling

A. State-supplied Equipment

For projects where traffic signal equipment is to be supplied by the Georgia Department of Transportation, obtain State-supplied traffic signal equipment from the Traffic Signal Electrical Facility (TSEF):

1. Contact the Engineer by phone or correspondence within one week after receiving the Notice to Proceed and arrange for a date, time and location to pick up the signal equipment and materials from the Traffic Signal and Electrical Facilities (TSEF).
2. Sign GDOT's Warehouse Issue Request Form 592 to accept delivery of the State-supplied equipment from GDOT's Traffic Signal Equipment Warehouse. Initial Form 592 if equipment is received from a GDOT District Field Office.
3. Inspect the equipment to ensure that it is operating properly and perform any operational tests within ten (10) calendar days after receiving the equipment.
4. Before installation, and within ten (10) calendar days, certify to the Engineer in writing that the State-supplied equipment was received in good condition.
5. Notify the Engineer in writing if the State-supplied equipment is defective. The State Signal Engineer will replace the defective State-supplied equipment.
6. If no written dissent is received after ten (10) calendar days or if equipment is installed in the field, the Engineer will consider this equipment to be satisfactory and accepted.
7. The Contractor shall supply new in like and kind State approved equipment to replace State-supplied equipment that is damaged or lost.

B. Signal Equipment

See Section 925 for signal equipment specifications.

The signal equipment, components, supplies, or materials used in traffic signal installation may be sampled and tested if not previously approved by the Department.

Test according to the Specifications and the Sampling, Testing, and Inspection Manual using one or more of the following methods:

- Have the Department use their own facilities.

- Have the supplier or manufacturer use their facilities with an authorized Department representative to witness the testing.
- Provide independent laboratory test results indicating compliance with Department Specifications referenced in Subsection 647.1.02, "Related References", of this document.
- When testing by the Department is required, supply the item to the Department. Acceptance of materials tested does not exclude further testing or waive warranties and guarantees required by the Specifications.

C. Cable

Use cable conforming to Section 680, Section 922, and Section 925 and the appropriate IMSA, NEMA, or UL Specifications for the wire or cable.

Obtain pole attachment permits required by local utility companies or pole owners to allow joint use for signal cable, hardware, or other auxiliary devices.

D. Interconnect Communications Cable

1 Use fiber optic interconnect cable or spread spectrum radio for all new interconnected signal systems. See Section 935 for fiber optic cable or spread spectrum information, specifications, marking and installation and testing techniques.

2 Use copper cable only as directed by the Engineer or where specifically shown in the Plans. Refer to Subsection 647.3.05, "Construction", of this document for installation.

E. Conduit on Structures

Use galvanized rigid steel materials for all exposed conduit for cabling. Use galvanized rigid steel (GRS) conduit on the exterior of signal poles and other structures and to house signal conductors for the entire length from the weather head on the pole to the interior of the cabinet or to the pull box and ground conduit using an approved grounding bushing.(see Subsection 647.3.05V).

647.3 Construction Requirements

Refer to Subsection 107.07 of the Specifications regarding proper conduct of The Work.

647.3.1 Personnel

For the definition of a qualified electrician, see Subsection 755.1.01.

647.3.2 Equipment

Use machinery such as trucks, derricks, bucket vehicles, saws, trenchers, and other equipment necessary for the work and approved by the Engineer prior to installation operations.

647.3.3 Preparation

Utility Permits

A. Application

Apply for, obtain, and pay for utility services and pole attachment permits for signal operation, traffic signal communications including standard telephone service and signal communications as required in the Plans.

B. Maintenance

The Contractor will be responsible for establishing utility services and ongoing monthly costs related to utility services until Final Acceptance of the signal(s) installation, or in the event of multiple installations, the Contractor will be responsible for utility costs until overall project acceptance. After Final Acceptance, the Contractor will provide an orderly transfer these services and permits to the local government or jurisdiction responsible for maintenance and operation. Ensure that the transfer does not interrupt service.

C. Utility Location

1. Adjustment

Prior to ordering signal poles, locate utilities and adjust the location of poles, where necessary, to minimize utility conflicts. Obtain approval from the District Traffic Engineer for any deviation from the Plans.

Determine the final length of mast arms based on any field adjusted pole locations. Final location shall be approved by the District Traffic Engineer.

2. Clearance

   When installing aerial cable of any type, it is the Contractor's responsibility to ensure that overhead clearance and separation requirements conform to local utility company standards, the NEC and the NESC. Refer to the Standard Details Drawings for further information on utility clearances.

3. Pre-emption

   When traffic signal pre-emption is used, coordinate with the railroad, fire department or any other agency that uses pre-emption to obtain pre-emption output and route output cable to the signal controller operating the intersection to be pre-empted. It is the Contractor's responsibility to obtain all permits and approval for crossing at grade or grade separated railroad facilities.

647.3.4 Fabrication

General Provisions 101 through 150.

647.3.5 Construction

A. Acquiring and Disposing of Equipment

Do not modify the signal equipment, design, and operation without the District Traffic Operations Engineer's written approval.

All traffic signal equipment removed or replaced shall be returned to District Traffic Signal Shops unless otherwise noted in the Plans or as directed by the Engineer or District Signal Engineer. Provide an inventory list and arrange a mutually agreeable delivery time with the District Signal Engineer twenty-four (24) hours in advance. All materials not returned to the District Signal shop shall be the responsibility of the Contractor to remove and dispose.

B. Traffic Signal Equipment Modification and Removal

Upon the Department issuance of Notice to Proceed any existing traffic signal equipment, responsibilities for maintenance, operations and response to traffic signal malfunction become the responsibility of the Contractor and provisions of Subsection 647.3.07, "Contractor Warranty and Maintenance", apply.

1. Remove existing signal equipment that is not used in the final installation when the new signal equipment is operational.

   Carefully remove equipment to minimize damage and retain it in its original form. This equipment may include:

   - Strain poles including the foundation down to 3 feet (900 mm) below ground level finished grade
   - Timber poles
   - Traffic signal cabinets including contents, cabinet base and work pads
   - Original signal heads including span wire support
   - Other equipment not retained in the final installation

   Ensure that unused equipment is secured and disposed of in accordance with all Environmental Protection Agency regulations and Department instructions.

2. Replace traffic signal equipment that the District Signal Engineer determines has been damaged or destroyed during installation, modification, or removal of the traffic signal, at no expense to the Department. Replace with new material.
3. If the Engineer finds that the existing material shown in the Plans to be relocated is unsatisfactory, replace with new material. The costs will be paid for as Extra Work.
4. Remove old signal heads by the end of the day that the new signal equipment is placed in operation. Remove all other signal equipment within seven (7) days after operations of the newly installed equipment.

C. Auxiliary Cabinet Equipment

Provide auxiliary cabinet equipment or special purpose equipment with connecting harnesses, if necessary, or as shown in the Plans or Standard Detail Drawings.

1. Install the equipment in its associated cabinet. Extraneous wiring may be necessary to install the equipment. Additional cabling shall be enclosed in NEMA enclosure and neatly secured.
2. Connect the auxiliary equipment to its cable harness, or insert it in premounted racks or sockets.

D. Signal Controllers

Furnish and install approved microprocessor controllers at the locations shown in the Plans or as directed by the Engineer. All equipment furnished shall comply with Section 925,"Traffic Signal Equipment".

1. Identify the controller and other auxiliary equipment by model and revision numbers. These numbers shall agree with previously approved catalog submittals.
2. Assemble the controller, cabinet, and auxiliary equipment to provide the operational sequence shown in the Plans and future operations specified. Ensure the controller functions as a unit with the cabinet assembly.
3. Ensure controller and auxiliary equipment are provided AC power from receptacles marked for controller power.
4. The Department will provide controller firmware. The Contractor shall provide the controller to the Department. The Department will load the firmware into the controller and notify the Contractor that the controller is ready to be picked up. If the controller is purchased with applications firmware, ensure that the firmware provided is the current Department licensed version of firmware including "boot code". Current firmware version shall be at the date of application "turn on".
5. Unless otherwise specified in the Plans or directed by the Engineer, thirty days prior to installation of equipment the Contractor shall deliver the controllers to and pick up the controller from the Traffic Signal Electrical Facility (TSEF) Atlanta office. The Department shall have 30 work days to load the controller firmware starting from the date the Contractor delivered the controllers to the Department.
6. For 2070 signal controllers used for Ramp Metering ensure the Watchdog Timer "Muzzle Jumper" is selected on the field input/output module. This is required for operating with a 208 monitor.

E. Cabinet Assembly

1. Location

   The cabinet should be located in accordance with the Plan location, however if the cabinet location needs to be moved, choose a location that:

   a. Protects maintenance personnel from vehicles when servicing the equipment
   b. Allows the front panel door of the controller to open away from the intersection for view of signal indications while servicing or performing cabinet work.
   c. Does not block a sidewalk or passageway and complies with Federal regulations for Americans with Disabilities Act (ADA) clearance requirements.
   d. Is located away from the roadway or curb line to prevent vehicular damage to the cabinet.
   e. Is not located within drainage areas or installed in areas likely to collect and hold surface water.
   f. Relocate the cabinet to avoid conflicts from proposed reconstruction projects, commercial driveways, etc. within the right-of-way at the Engineer's discretion.

2. Erection

   Install and level traffic signal controller cabinets at locations shown in the Plans and/or as directed by the Engineer.

   a. Install cabinets to conform to the Standard Detail Drawings. Install pole or base-mounted as indicated in the Plans. Cabinet base shall not extend more than 9 inches above final grade.
   b. Seal base-mounted cabinets to their base using silicone based sealer. Pliable sealant used shall not melt or run at temperatures as high as 212 ºF (100 ºC).
   c. Use prefabricated bases and work pads

d. Install technician pad in front and rear of the controller cabinet door and if applicable in front of battery backup cabinet door. See Standard Details for pad information.

e. Close all unused conduit in the controller base with a PVC cap sized appropriately. Do not permanently affix the conduit cap to the conduit. Seal those conduits used for signal cable with a pliable sealant to prevent moisture and insects from entering the cabinet via the conduit.

3. Field Cabinet Wiring

All wiring shall be neat and secured and comply with NEC, NEMA, and Table 647-1, Table 647-2, Table 647-3 Table 647-4, Table 647-5, and Table 647-6 of this Specification.

a. Cut field cabinet wiring to the proper length and organize it in the cabinet. Wire lengths should be slack (minimum 10 feet) allowing for future modifications.

- Use at least No. 6 AWG wire for the conductors between service drop and AC+ and the AC- terminals.

b. Do not mount electrical meter to the cabinet. Submit "power pedestal" or other method of providing location for mounting to the Engineer.

c. Label all field terminals and conductors so as to identify the specific field input.

d. Crimp terminal connections to conductors with a ratchet-type crimping tool that will not release until the crimping operation is completed.

e. Do not use splices inside the controller cabinet, base, or conduit.

f. Do not use solid wire, except grounding wire.

g. Supply the cabinets with cabinet wiring diagrams, schematic drawings, pin assignment charts, and manuals for circuits and components. Store these documents in the cabinet in a resealable, weatherproof container.

F. Signal Monitors

Furnish signal monitor equipment as follows,

1. Mount signal monitors in a rack with appropriate connectors to attach to the wiring harness.
2. Program the monitor according to the signal operation indicated in the Signal Plans before placing the installation in flash or stop-and-go operation. Provide any signal monitoring programming tools required to program the monitor to the maintaining agency.
3. Configure and equip the signal monitor to monitor all red signal indications. Ensure that the red output for unused or vacant load bays or output slots is jumpered to 120 V AC+.
4. For ITS Cabinets configure the CMU and AMU.
5. For Ramp Metering Cabinets mount model 208 monitor in rack and provide the necessary programming required for the Ramp Meter operation as shown in the Plans.

G. Power Disconnect

Install a power disconnect box at each intersection as shown in the Standard Detail Sheets. Ensure the power disconnect is installed at the top of the cabinet pole or as indicated on plans. Install service cables from disconnect box and terminate as specified on the controller cabinet-wiring or battery backup diagram.

H. Flashing Beacon

Furnish and install the flashing beacon controller at the locations shown in the Plans and/or as directed by the Engineer. Install it as a complete unit (solid state flasher and cabinet with time clock, if applicable) and ensure that it conforms to this Specification.

I. Loop Detector Systems

Install and test loop detector systems according to NEMA Standards Publication TS 1-1983, Section 15, Inductive Loop Detectors, subsequent revisions (except as shown in the Plans), Details, notes, and this Specification.

Ensure that loop detectors are complete and fully operational before placing the signal in stop-and-go operation.

1. General Installation Requirements

Each loop must consist of at least two turns of conductor, unless otherwise shown in the Plans or this Specification. Do not place a portion of the loop within 3 feet (1 m) of a conductive material in the pavement such as manhole covers, water valves, grates, etc.

a. Install pull boxes, condulets, and conduits before beginning loop installation.

b. Ensure that the ambient pavement surface temperature in the shade is at least 40 ºF (5 ºC) before cutting roadway and placing sealant into saw cuts.

2. Loop Saw Cuts

a. Outline the loop on the pavement to conform to the specified configuration.

b. Ensure each loop has a separate saw cut with a minimum distance between saw cuts of 6 inches.

c. Install the detector loop in a sawed slot in the roadway surface deep enough to provide at least 3 inches (76 mm) of sealant cover.

d. Ensure that the slot is at least 0.25 inches (6 mm) wide for stranded No. 14 AWG loop wire, THWN, XHHW, or XLPE, and at least 0.31 inches (7 mm) wide for polyethylene or PVC encased No. 14 AWG loop wire.

1) At the intersection of the slots, drill a 2 inch (51 mm) diameter hole or make miter saw cuts in the pavement. Overlap miter saw cuts at the intersection of saw cuts so that the slots have a full-depth and smooth bottom.

2) Prevent the wire from bending sharply.

3) Do not install detector loop wire unless sawed slots are completely dry and free of debris. Pressure wash the slot to guarantee adhesion of the loop sealant. Use compressed air to thoroughly dry the sawed slot.

4) Install the loop wire starting at the nearest pull box or condulet, around the loop for the specified number of turns, and back to the pull box or condulet.

NOTE: Loop wire from the street is to be spliced in condulets or pull boxes only.

5) Refer to table 647-9 for the number of turns for Quadrupole loops. Refer to table 647-8 for the number of turns for) Bipole loops. Bipole loops require at least three (3) turns.

e. Press the wire in the slot without using sharp objects that may damage the jacket.

f. Hold the loop in place every 5 feet (1.5 m) with 1 inch (25 mm) strips of rubber, neoprene, flexible tubing, or foam backer rod as approved by the Engineer.

g. Leave the hold down strips in place when filling the slot with loop sealant.

h. Where encased loop wire is used, apply a waterproof seal to the ends of the polyethylene tubing that encase the wire to prevent moisture from entering the tube.

i. Where the loop wires cross pavement joints and cracks, protect the loop wires using the method specified in "Traffic Signal Details" in the Plans. When crossing expansion joints drill a 2 inch diameter hole minimum 3 inches deep, or to bottom of saw cut. Do not install loop wires in an expansion joint.

j. Twist Loop Lead-in 3 turns per foot.

3. Loop Sealing

After successfully testing each loop, fill the slots with sealant to fully encase the conductors.

a. Seal the slot within one hour of cutting slot.

b. Ensure that the sealant is at least 3 inches (75 mm) thick above the top conductor in the saw cut.

c. Apply the sealant so that subsequent expansion does not extend the sealant material above the pavement surface.

d. In case of accidental spill, before the sealant sets, remove surplus sealant from the adjacent road surfaces without using solvents or epoxy sealants.

e. When the Engineer determines that the loop sealant can accommodate traffic but the surface is tacky, dust the sealer on the pavement surface with cement dust before opening the roadway to traffic.

f. Dispose of the solvents used to clean loop installation equipment according to the manufacturer's specifications and local, State, and Federal regulations.

4. Loop Connections

   Connect loop conductors to a shielded lead-in cable that runs from the pull box adjacent the pavement edge or condulet to the detector hook-up panel in the controller cabinet, unless otherwise specified in the Plans.

   a. Use continuous (no splices) shielded lead-in cable from the pull box or condulet to the cabinet input file terminal. Do not ground the shield in the loop lead-in cable at the cabinet.

   b. Connect each loop to an individual detector channel as specified in the Plans.

   c. If the Plans specify that two or more loops will be operated on the same detector channel or detector amplifier unit, wire them in series to their loop lead-in at the pull box or condulet.

   d. Use series-parallel connections when series connections do not meet the manufacturer's specified operating range for the detector amplifier unit.

   e. Make weather-tight and waterproof splices as detailed on the Plan Standard Detail Sheets. Make loop splices to loop lead-in cable only after the detector system has been tested and demonstrated under traffic conditions to the Engineer's satisfaction.

5. Loop Maintenance

   Locate all existing loops, determine the operational status of all loop assemblies, and notify the Engineer prior to commencing loop construction activities at the intersection.

   Maintain all existing, operational loops, unless otherwise notified by the Engineer. Repair of an existing loop that is non-operational prior to beginning work will be considered as extra work.

   Locate points of conflict between new loops and existing loops, and install all new loops and saw cuts so as not to cut existing loop lead-ins and loop wires that are to be retained.

   If an existing operational loop that is not scheduled for replacement fails during the construction time frame, notify the Engineer and complete the replacement of the damaged loops immediately.

   The Engineer may grant a twenty-four (24) hour period to repair the loops if their operation is not critical. All costs associated with the replacement of the loops damaged during construction shall be charged and paid for by the Contractor.

J. Pedestrian Push Button

Install the push button with a pedestrian instruction sign as illustrated on the Department's Standard Detail Sheets and according to the Plans.

1. Place the pedestrian buttons as shown on the Signal Plan Sheet and within 10 inches (254 mm) of sidewalk or concrete landing pad. Position the pedestrian button to correspond to the appropriate signal phase. Locate pedestrian buttons perpendicular to the appropriate signal indication and signal phase, and as field conditions require.
2. Place the center of the buttons between 38 inches (0.965 m) and 42 inches (1.05 m) above the sidewalk or ground level.
3. Seal all openings to prevent moisture from entering the pushbutton.

K. Cable

Install and connect electrical cable to the proper equipment to produce an operating traffic signal system. Use stranded copper cable conforming to Section 925.

Install wiring in accordance with IMSA, NEMA, UL, and the Department's Traffic Signal Wiring Standards, shown in Tables 647-1, 647-2, 647-3, 647-4, 647-5, and 647-6 of this Specification.

In addition to the information provided below, see Section 682, Section 922, and Section 925 for cable equipment and installation specifications.

Table 647-1 Vehicular Signals Georgia DOT Wiring Standards						
Signal Indications	Four Conductor Cable		Seven Conductor Cable		Ten Conductor Cable	
	Phases 2, 4, 6, & 8	Phases 1, 3, 5, & 7	Phases 2, 4, 6, & 8	Phases 1, 3, 5, & 7	Phases 2, 4, 6, & 8	Phases 1, 3, 5, & 7
Red	Red Wire		Red Wire		Red Wire	
Yellow	Black Wire		Orange Wire		Orange Wire	
Green	Green Wire		Green Wire		Green Wire	
Red Arrow		Red Wire		White Wire with Black Tracker		Red Wire with Black Tracker
Yellow Arrow		Black Wire		Black Wire		Orange Wire with Black Tracker
Flashing Yellow Arrow		Green Wire		Orange Wire		Blue Wire
Green Arrow		Green Wire		Blue Wire		Green Wire with Black Tracker
Auxiliary					Black Wire	Black Wire
Neutral	White Wire	White Wire	White Wire	White Wire	White Wire	White Wire
Spare					White Wire with Black Tracker	White Wire with Black Tracker

Table 647-2 Vehicular Loop Detectors Georgia DOT Wiring Standards				
Detectors	Phases 3, 4, 7, and 8 Presence Loops		Phases 2 and 6 Setback Pulse Loops and Phases 1 and 5 Presence Loops	
	Loop Wires	Shielded Loop Lead-in Cable, 3 Pair	Loop Wires	Shielded Loop Lead-in Cable, 3 Pair
Right Curb Lane	Red Wire	Red/Black Pair (1)	Red Wire	Red/Black Pair (1)
Second Lane	Green Wire	Green Black Pair (1)	Green Wire	Green Black Pair (1)
Third Lane	White Wire	White/Black Pair (1)	White Wire	White/Black Pair (1)
Fourth Lane	Red Wire	Red/Black Pair (2)	Red Wire	Red/Black Pair (2)
Fifth Lane	Green Wire	Green/Black Pair (2)	Green Wire	Green/Black Pair (2)
Sixth Lane	White Wire	White/Black Pair (2)		

First Left-Turn Lane			Red Wire	Red/Black Pair (3)
Second Left-Turn Lane			Green Wire	Green/Black Pair (3)

Table 647-3 Pedestrian Signals Georgia DOT Wiring Standards				
Signal Indications	**Four Conductor Cable**		**Seven and Ten Conductor Cable**	
	Phases 2 and 6	**Phases 4 and 8**	**Phases 2 and 6**	**Phases 4 and 8**
Don't Walk	Red Wire	Red Wire	Red Wire	Orange Wire
Walk	Green Wire	Green Wire	Green Wire	Blue Wire
Neutral	White Wire	White Wire	White Wire	White Wire

Table 647-4 Pedestrian Detectors Georgia DOT Wiring Standards		
Push Buttons	**3 Pair Shielded Cable**	
	Phase 2 and 6	**Phase 4 and 8**
Call	Green and Black Pair	Red and Black Pair

NOTE: Do not use aluminum cable.

Table 647-5 Ramp Meter Signals Georgia DOT Wiring Standards	
Signal Indications	**3-Section Signal Heads Seven Conductor Cable L1,L2,L3**
Red	Red Wire
Yellow	Orange Wire
Green	Blue Wire
Neutral	White Wire

Table 647-6 Ramp Meter Loop Detectors Georgia DOT Wiring Standards				
	Demand Detector Loops		Queue Detector Loops	
	Loop Wires	Shielded Loop Lead-in Cable, 3 Pair	Loop Wires	Shielded Loop Lead-in Cable, 3 Pair
Lane 1	Red Wire	Red/Black Pair (2)	Red Wire	Red/Black Pair (1)
Lane 2	Green/Wire	Green Black Pair (2)	Green Wire	Green/Black Pair (1)
Lane 3	White Wire	White/Black Pair (2)	White Wire	White/Black Pair (1)
	Passage Detector Loops		Mainline Detector Loops (if used)	
	Loop Wires	Shielded Loop Lead-in Cable, 3 Pair	Loop Wires	Shielded Loop Lead-in Cable, 3 Pair
Lane 1	Red Wire	Red/Black Pair (3)	Red Wire	Red/Black Pair (4)
Lane 2	Green Wire	Green/Black Pair (3)	Green Wire	Green/Black Pair (4)
Lane 3	White Wire	White/Black Pair (3)	White Wire	White/Black Pair (4)

L. Signal Cable for Vehicular Signal Heads and Pedestrian Heads

Install cable for signal heads and pedestrian heads as follows:

1. For vehicle signal heads, install one 7-conductor or 10-conductor signal cable for each intersection approach from the controller cabinet to the through-signal head on each approach as directed by the Engineer. From this leftmost signal head, install a 7-conductor or 10-conductor signal cable to each of the other signal heads on the same approach in sequence. If a flashing yellow arrow signal head is used for the left turn display, install either a second 7-conductor signal cable per left turn phase or one 10-conctor signal cable for each intersection approach.
2. For pedestrian signal heads, install one 4-conductor or 7-conductor signal cable from the controller cabinet to each pedestrian head installation location to operate either one or two pedestrian heads.
3. Make a minimum 1 foot (300 mm) diameter 3 turn weather drip loop as shown in the Standard Detail Drawings in the Plans at the entrance to each signal head.
4. Neatly tie signal cables leaving a structure or weatherhead to enter a signal fixture. Tie the cables to the messenger cable as illustrated in the Standard Detail Drawings.
5. For Ramp Meter signal heads install one 7-conductor signal cable for each lane of the Ramp Meter operation from the controller cabinet.

M. Interconnect Communications Cable

Use fiber optic interconnect cable as specified in the Plans for all new interconnected signal systems. See Section 935 for fiber optic cable information, specifications and installation and testing techniques, and all other signal interconnect methods. Install interconnect communications cable as follows:

1. Provide support for the interconnect cable on new or existing utility poles or signal poles; install underground in conduit.
2. Use fiber optic standoff brackets as needed to prevent damage from poles, trees and other structures.
3. Pull cables with a cable grip that firmly holds the exterior covering of the cable.
4. Pull the cables without dragging them on the ground, pavement or over or around obstructions. The Engineer will inspect and approve the cable prior to installation. Use powdered soapstone, talc, or other approved inert lubricants to pull the cable through the conduit.
5. When using a separate messenger cable, spirally wrap the communications cable with a lashing machine according to the IMSA-20-2 Specifications.
6. Do not splice outside the signal cabinet except at the end of full reels of 5,000 feet (1500 m).
7. Ensure that splice points are near support poles and accessible without closing traffic lanes.
8. Unless drop cable assemblies for communications are used, loop the cable in and out of the control cabinets. Coil and tie 10 feet (3 m) of cable in the controller cabinet foundation. Tape the cable ends to keep moisture out until the terminals are attached.
9. Prevent damage to the cable during storage and installation.

NOTE: Do not allow anyone to step on or run over any cable with vehicles or equipment.

N. Loop Detector Lead-in Cable

Use 3-pair shielded lead-in cable in compliance with Section 925 and manufacturer's recommendations for Detector loop lead-in installed for loop detectors. Ensure the three pair has 3 separate distinguishing colors. Use a shielded lead-in cable connecting the loop to the detector hook-up panel in the controller cabinet, unless otherwise specified in the Plans. Provide a separate 3- pair for each phase or future phase.

1. Splice the loop detector wire to a shielded loop detector lead-in cable in a pull box adjacent to the loop detector installation.

2. Use continuous (no splices) shielded lead-in cable from the pull box or condulet to the cabinet input file terminal. If induced voltage is present, the shield in the loop lead-in cable shall be grounded to cabinet per NEC. Otherwise do not ground the shield in the loop lead-in cable at the cabinet.
3. Connect each loop to an individual detector channel as specified in the Plans.
4. Each detection loop shall be connected to the control cabinet via separate lead-in pair.
5. Set back loops with aerial loop leads to the control cabinet shall be supported by ¼ inch messenger cable with no splices between the control cabinet and the initial point of aerial attachment.
6. Make weather tight and waterproof splices between lead-in and loop wire. Loop installation may be approved only after the detector system has been tested and demonstrated under traffic conditions to the Engineer's satisfaction, during the Operational Test Period.

O. Pedestrian Push Button Lead-in

Use 3-pair shielded lead-in cable compliant with Section 925 for pedestrian push buttons. Install one 3-pair shielded lead-in cable to each pedestrian push button station(s) location to operate either one or two push buttons. Do not ground the shield for the push button lead-in cable at the controller cabinet. Do not use the same 3 pair cable for loop and pedestrian detectors.

P. Messenger Cable, Stranded-Steel

The messenger is used to support signal cable indicated in the Plans as overhead cable. Use devices such as aluminum wrap, aluminum wire ties or lashings to attach the cable.

- Before erecting the messenger strand, determine the suspension strand length to span the distance between the poles.
- Run the messenger strand from structure to structure without splicing.
- The minimum allowable sag is two and one-half percent (2.5%) for timber poles, five (5%) for strain poles of the longest diagonal distance between the signal poles unless pole manufacturers specifications exceed 2.5%. The contractor is responsible for providing the District Signal Engineer with sag calculations for new installations.
- Calculate attachment points for the messenger strand at the signal pole according to the Plan Detail Sheet.

Set messenger strands so that the height conforms to the clearances on the Standard Detail Drawings. Attach cables to messenger cable using lashing wire, aluminum ties, or lashing rods (Subsection 925.2.43). If lashing rods are used use lashing rods sized for the cables and messenger strand. Only use lashing rods that are of the same material as the messenger strand. Lashing wire shall only be used to support aerial loop lead-in and fiber optic.

1. Drill wood poles to receive the eye bolts so that the span wire and eyebolt at each connection form a straight angle.
2. Never pull or strain the messenger on the eye bolt to an angle of variance greater than ten degrees (10º).
3. Attach down guy wires to guy hooks. Use a minimum 3/8 inch messenger cable for down guys. Never attach them directly to the eye of an eyebolt.
4. Ensure that messenger strand clearances conform with local utility company Standards.
5. Make stranded messenger cable attachment points with the appropriate size strand vises or 3 bolt clamps. Stranded steel messenger cable is not paid for separately under this Specification.
6. Use minimum ¼ inch messenger cable.
7. Use standoff brackets as needed to prevent damage from poles, trees or other structures.

NOTE: Never splice messenger cable between structures or stand off brackets.

Q. Underground Cable for Signal Circuits

Underground cable for signal circuits includes cable, with conduit, as shown in the Plans. Install cable under existing pavement or surfaced shoulder, according to Subsection 680.3.05.

1. Cable in Conduit

Pull cable into conduits as follows:

a. Pull cables into conduits without electrical or mechanical damage. Pull cables by hand only. The use of trucks or other equipment is not permitted, unless approved by the Engineer. If mechanical pulling is approved, do not exceed the manufacturer's tension rating for the cable.

b. Pull cables with a cable grip that firmly holds the exterior covering of the cable.

c. Use powdered soapstone, talc, or other inert lubricants to place conductors in conduit according to manufacturer's recommendations.

d. Handle and install the conductors to prevent kinks, bends, or other distortion that may damage the conductor or outer covering.

e. Pull all cables in a single conduit at the same time. When pulling cables through hand holes, pole shafts, etc., use a pad of firm rubber or other material between the cable and the opening edges to prevent cable damage.

f. When installing cable in conduit with existing signal cable circuits remove all existing cables and pull them back into the conduit with the new cables.

g. The distance between pull boxes in a run of conduit shall not be greater than 100 feet (30 m), unless otherwise shown in the Plans or approved by the Engineer or District Signal Engineer, with the exception of fiber optic cable.

h. The distance between pull boxes in a run of conduit for fiber optic cable shall not exceed 750 feet (225 m), unless otherwise shown in the Plans or approved by the Engineer. Identification tape and tone detection wire shall be used for fiber optic cable in conduit. All unused conduit shall have a continuous pull cable installed between pull boxes.

2. Splices

Required splicing shall be performed according to the National Electric Code; use materials compatible with the sheath and insulation of the cable.

Insulate required splices with electrical insulation putty tape, plastic, pressure sensitive, all-weather 1.5 mil (0.038 mm) electrical tape in accordance to standard details.

a. Make the spliced joints watertight.

Note: Splice detector wires to shielded loop detector lead-in at pull boxes located immediately after the loop wire leaves the roadway. No splices will be permitted in shielded loop detector lead-in cable from this point to the controller cabinet.

R. Conduit and Fittings

Install conduit by type (GRS, HDPE, PVC) as shown in the Plans and the Standard Detail Drawings. Refer to the NEC, for conduit full percentages.

Separate the power cable to the controller cabinet from all other cables in its own 1in (25 mm) galvanized rigid steel conduit except inside poles. Ensure that conduit conforms to Section 682, Section 923 and Section 925 with the following addition:

- Use flexible conduit only where shown in the Details or as directed to do so in writing by the District Signal Engineer.

Use the conduit size specified in the Plans, unless otherwise directed by the Engineer. Obtain written approval from the Engineer prior to installing conduit other than the size specified in the Plans.

All 2 inch (50 mm) conduit elbows shall be "sweep" type. The minimum radius for the elbow is 18 inches (450 mm), unless otherwise approved by the Engineer.

NOTE: Do not use multi-cell conduit.

Install conduit and fittings as follows:

1. Ensure that exposed conduit on poles are galvanized rigid steel (GRS) conduit.
2. Ream the ends of metallic conduit after cutting the threads. Ream other conduit as necessary.
3. Cut the ends square, and butt them solidly in the joints to form a smooth raceway for cables.
4. Make conduit joints to form a watertight seal.
5. Coat metallic conduit threads with red- or white-lead pipe compound, thermoplastic or Teflon seal. Ensure that they are securely connected.
6. Make plastic conduit joints with materials recommended by the conduit manufacturer.
7. Install bushings in the conduit to protect the conductors. When conduit is installed for future use, properly thread and cap the ends of the metallic conduit runs.
    a. Plug the ends of nonmetallic conduit runs to prevent water or other foreign matter from entering the conduit system.
    b. Seal the exposed conduit ends with a permanently malleable material.
    c. Ensure that empty conduit installed for future wire or cable has a nylon pull string or cord inside that is impervious to moisture and rot and can withstand a load of 50 pounds (23 kg) without breaking. Secure this pull cord at each open end and at each pull box.
8. Ensure that conduit on pole exteriors are mounted with galvanized, two-hole straps or clamps. Place the clamps not more than 3 feet (1 m) from junction boxes, condulets, or weatherheads. Place it at 3 foot (0.9 m) intervals elsewhere.
    a. Fasten the clamps to wood poles with galvanized screws or lag bolts.
    b. Do not install conduit risers on concrete, steel, or mast arm poles unless approved by the Engineer.
9. Install a weatherhead at the end of exterior conduit runs on a pole or other structure to prevent moisture or other matter from entering the conduit.
10. After installation, ensure that the conduit or fitting placement has not warped or distorted any condulet, terminal, control or junction box.
11. Ensure Conduit that is terminated at poles is grounded at the pull box.

S. Underground Conduit

Underground conduit includes encased or direct burial conduit.

1. Install the conduit in a trench excavated to the dimensions and lines specified in the Plans.
    a. Provide at least 18 inches (450 mm) finished cover, unless otherwise specified.
    b. Under pavement, excavate at least 36 inches (900 mm) below the bottom of the pavement.
2. Before excavation, the Contractor is responsible for determining the location of electrical lines, drainage, or utility facilities in the area to prevent damage.
    a. Place the conduit where it will not conflict with proposed guardrail, sign posts, etc.
    b. Change locations of conduit runs, pull boxes, etc., if obstructions are encountered during excavation. Changes are subject to the Engineer's approval.
    c. Where possible, provide at least 12 inches (300 mm) between the finished lines of the conduit runs and utility facilities such as gas lines, water mains, and other underground facilities not associated with the electrical system.
3. When the conduit run is adjacent to concrete walls, piers, footings, etc. maintain at least 4 inches (100 mm) of undisturbed earth or firmly compacted soil between the conduit and adjacent concrete or, when the conduit is encased, between the encasement and the adjacent concrete. Unless specified in the Plans, do not excavate trenches in existing pavement or surfaced shoulders to install conduit.
4. When placing conduit under an existing pavement, install the conduit by directional boring, or other approved means. See Section 682 for directional boring pipe specifications. Obtain the Engineer's approval prior to installing conduit by means of boring-method.

5. When the Plans allow trench excavation through an existing pavement or surfaced shoulder, restore the pavement shoulder surface, base, and subgrade according to the Specification.
6. Cut trenches for conduit on a slight grade (0.25 percent minimum) for drainage, unless otherwise specified. When the grade cannot be maintained all one way, grade the duct lines from the center, both directions, down to the ends.
7. Avoid moisture pockets or traps. Excavate vertical trench walls.
8. Tamp the bottom of the trench to produce a firm foundation for the conduit.
9. When necessary to prevent damage, sheet and brace the trenches and support pipe and other structures exposed in the trenches.
10. Conduit installed for fiber optic cable installation shall have identification tape and detectable tone wire installed for detection as specified and detailed in the Project Standard Detail Sheets.
11. Install direct burial conduit as shown in the Plans. Use rigid galvanized steel, or polyethylene conduit. Excavate at least 36 inches (900 mm) below the top of the finished ground or 36 inches (900 mm) below the bottom of the pavement.
12. When rock is in the bottom of the trench, install the conduit on a bed of compacted, fine-grain soil at least 4 inches (100 mm) thick.
13. Conduit installed for fiber optic cable installation shall have detectable tone wire installed for detection as specified in Section 682 and detailed in Standard Detail Sheets.

T. Encased Conduit

Place encased conduit in the locations shown in the Plans unless otherwise specified. Construct as follows:

1. Construct the encasement using Class A concrete that meets requirements in Section 500 .
2. Extend the encasement or conduit under roadway pavements or surfaces 6 inches (150 mm) past the outer edge of paved shoulders or sidewalks, or past curbs if no shoulder or sidewalk is present.
3. Extend the conduit at least 3 inches (75 mm) beyond the encasement.
4. Place 3 inches (75 mm) of concrete in the bottom of the trench and place the conduit on top of it.
5. Temporarily plug the ends of the conduit to prevent concrete or foreign materials from entering.
6. Cover the conduit with at least 3 inches (75 mm) of concrete. Wait to encase the conduit with concrete until the Engineer inspects and approves the conduit.
7. Cure the concrete encasement according to Subsection 500.3.05.Z, except curing may be reduced to twenty-four (24) hours. Use a precast encasement if approved by the Engineer.

U. Backfilling

Immediately backfill the conduit after the Engineer's inspection and approval, except for encased conduit, which must complete a twenty-four (24) hour cure period.

1. Backfill with approved material free of rocks or other foreign matter.
2. Backfill in layers no greater than 6 inches (150 mm) loose depth, up to the original ground level.
3. Compact each layer to one hundred percent (100%) of the maximum laboratory dry density as determined by GDT 7, GDT 24a, GDT 24b, or GDT 67 whichever applies.

V. Conduit on Structures

Install conduits, condulets, hangers, expansion fittings, and accessories on structures according to the Plans and, unless otherwise specified, the following:

1. Run the conduit parallel to beams, trusses, supports, pier caps, etc.
2. Install horizontal runs on a slight grade without forming low spots so they may drain properly.
3. Run conduits with smooth, easy bends. Hold the conduit ends in boxes with locknuts and bushings to protect the conductors.
4. When not specified in the Plans or Special Provisions, submit the type and method for attachment to structures to the Engineer for submission to the District Signal Engineer for approval.

5. Ground galvanized rigid steel conduit in pull boxes.

All exposed conduit shall be galvanized, rigid conduit unless otherwise specified.

W. Testing Conduit

After installing the conduit, test it in the presence of the Engineer.

1. Test conduit using a mandrel 2 inches (50 mm) long and 0.25 inches (6 mm) smaller in diameter than the conduit.
2. Repair conduit to the Engineer's satisfaction if the mandrel cannot pass through. If repairs are ineffective, remove and replace the conduit at no additional cost to the Department.
3. Thoroughly clean the conduits. When installing conduit but wiring at a later date:
   a. Perform the mandrel test.
   b. Ream the duct opening to remove burrs or foreign matter.
   c. Thoroughly clean the duct.
   d. Provide and install a weatherproof cap at each open end.
   e. All installed conduit not used or containing cable shall have a continuous nylon pull string installed between junction boxes.

X. Grounding

Ground the cabinets, controller, poles, pull boxes, and conduit to reduce extraneous voltage to protect personnel or equipment.

NOTE: Grounding shall meet the minimum requirements of the NEC.

Provide permanent and continuous grounding circuits with a current-carrying capacity high enough and an impedance low enough to limit the potential above the ground to a safe level.

Perform grounding as follows:

1. Bond the grounding circuits to nonferrous metal driven electrodes. Use electrodes that are at least 0.625 inches (15 mm) in diameter, 8 feet (2.4 m) long, and are driven straight into the ground.
2. Use the shortest possible ground lead that leads directly to a grounding source.
3. Ensure that the maximum resistance between the ground electrode and the earth ground is no greater than twenty five (25) ohms.
4. Connect the ground electrodes and the ground wire with an exothermic weld or ground rod clamp as approved by Signal Engineer.
5. Connect neutral conductors to the cabinet buss-bar and ground them at each terminal point.
6. Ground the cabinet with a No. 6 AWG solid copper wire between the buss-bar to the ground electrode. Bends shall not exceed 4 inch (100 mm) radius bends.
7. Permanently ground the poles by bonding the No. 6 AWG solid copper wire to a separate ground rod.
8. Ground pole-mounted accessories to the pole.
9. Underground metallic conduit or down guys are not acceptable ground electrodes. Do not use Snap-On connections.
10. For extended distances between Ramp Meter and IVDS additional grounding may be required by the manufacturer.

Y. Ground Rod

Install copper clad ground rods adjacent to the traffic signal pole bases, controller cabinet bases, and in pull boxes to shield and protect the grounding system.

When ground rods are not protected, bury them at least 2 inches (50 mm) below the finished ground level.

1. Use 0.625 inch (15 mm) diameter ground rods at least 8 feet (2.4 m) long. Use copper clad ground rods.
2. Drive single ground rods vertically until the top of the rod is no more than 2 inches (50 mm) above the finished ground.

3. Attach a length of No. 6 AWG solid copper wire to the top of the ground rod using an exothermic weld.
4. When controller cabinets are mounted on timber poles, ground them with No. 6 AWG solid copper wire attached to the ground rod. Run the wire inside a minimum 0.75 inch (19 mm) rigid conduit attached to the timber pole and to the chassis ground in the controller cabinet.
5. When ground penetration is not obtained:
   a. Place a horizontal ground rod system of three (3) or more parallel ground rods at least 6 feet (1.8 m) center-to-center and 30 inches (720 mm) below the finished ground.
   b. Ensure that this grounding system produces a resistance of 25 ohms or less.
   c. Join the ground rods and connect them to the grounding buss of the traffic signal cabinet with No. 6 AWG solid copper wire.
6. Install a ground wire on wood poles.
   a. Use at least No. 6 AWG solid copper wire bonded to the grounding electrode and extending upward to a point perpendicular to the uppermost span.
   b. Place wire staples no greater than 2 feet (0.6 m) apart to secure the ground wire to the pole.
   c. Connect the span wire to the pole ground using copper split bolt connectors. Provide a separate ground rod for pole mount cabinets. Do not use the pole ground. Bond the pole ground to the pole cabinet ground rod.
7. Ensure that grounding for signal strain poles conforms to the grounding assembly typical erection Detail Sheet in the Plans.
8. Permanently ground cabinet and cabinet conduits to a multi-terminal main ground buss.
   a. Use a No. 6 AWG solid copper wire bonded between the buss and grounding electrode.
   b. Connect the power company neutral, conduit ground, and grounds of equipment housed in the cabinet to the buss-bar.
   c. Do not ground to a permanent water system instead of the driven ground rod. Ensure that grounding devices conform to the requirements of the NEC and NEMA.
9. When testing for resistance ensure the ground is dry. The Contractor is responsible for submitting the ground test results.

Z. Signal Poles

See Section 501 for signal pole materials certification and Subsection 925.2.27, Subsection 925.2.28, Subsection 925.2.29, Subsection 925.2.30 and Subsection 925.2.31 for traffic signal equipment. Refer to the Plans for pole locations.

Where necessary, adjust pole location to avoid utility conflicts. Provide minimum clearance distances between the signal pole and the roadway as specified in the Plans and on the Standard Detail Drawings.

1. Strain Poles

   Provide signal strain poles that conform to Section 639.

   Provide caissons or foundations that conform to the "Construction Detail for Strain Pole and Mast Arm Pole Foundations" in the Plans.

   Determine the required foundation size based on the manufacturer's specified "bending moment at yield" for each pole.

   Provide strain poles with manufacturer-installed holes for pedestrian heads and push buttons. Seal unused holes with water tight plugs that match the pole finish provided by the manufacturer of the pole. All steel strain pole holes that are used shall have a rubber grommet or weather head.

   Rake the poles during installation to provide a pole that is plumb once the load is applied.

2. Metal Poles

   Install metal poles as follows:

   a. Ensure that anchor bolts, reinforcing bars, and ground rods conform to Section 639 and Section 852 and are placed in the excavation.

b. Support the anchor bolts with a template to provide the proper bolt circle for the pedestal or pole to be installed. Anchor bolts shall be installed without any modifications. Refer to signal details for proper installation.

c. Wire the reinforcing bars together or to the anchor bolts.

d. Wire the conduits in the base to the reinforcing bars for support. Ensure that they are accessible above and beyond the foundation.

e. Before pouring the foundation concrete, determine that the anchor bolt orientation is correct so that the tensile load is divided between at least two anchor bolts. Pour and vibrate the concrete with the Engineer present.

f. Ensure that the pole foundations and pedestals with the anchor-type base conform to Section 500 and Section 639. Do not install or locate poles without the Engineer's approval. Ensure the foundation meets AASHTO guidelines.

   1) The Engineer may take a concrete test cylinder as it is being poured.

   2) Cure the cylinder and submit it for testing to the Office of Materials and Research.

g. If the concrete foundation fails to meet the requirements of the Specifications and is not accepted, replace the foundation upon notification of failure.

h. After installing poles and applying the load of the signal span, inspect them for plumb and for the proper horizontal position of the mast arm, when applicable. Make sure all threads of the nut are threaded onto the anchor bolt.

i. Correct deficiencies by using the leveling nuts on the anchor bolts or by adjusting the mast arm.

j. The Engineer will examine the pedestals and poles for damaged paint or galvanizing. Restore the finish coating where necessary.

k. After the Engineer approves the pole installation, provide an acceptable method of protecting the area between the pole base and the top of the foundation to prevent the accumulation of debris.

   If the finish or galvanized steel materials is scratched, chipped, or damaged, the material will be rejected. The finish may be replaced as specified under Section 645, with the Engineer's approval.

l. For poles or arms that need galvanization, thoroughly clean the steel poles and arms and touch up non-galvanized parts with i-d red or original-type primer.

m. Apply the remaining coats according to the System V (Heavy Exposure) Section 535, unless otherwise indicated in the Plans. The entire pole shall be the same color.

n. Install a service bracket and insulator on one pole at each intersection to attach power service wire as specified in the Plan Details. Install a disconnect box on the cabinet pole at each intersection to attach power service where the power service is provided overhead.

o. Install poles to which controller cabinets are attached with mounting plates, bolts, nipples, and at least two, 2.5 inch (64 mm) threaded openings at the top and at least two (2) 2 inch (50 mm) at the bottom of the pole.

p. Attach the fittings to the poles as specified by the manufacturer in the Plans or as the Engineer directs. The fittings may include:

   - Cast aluminum cap
   - Pole clamp hardware for span wire attachment
   - Weatherhead with chase nipples and couplings
   - Galvanized elbow with bushing installed by cutting the pole and welding in place around the entire circumference

q. The Office of Materials and Research will inspect the anchor bolts. If approved, the Office of Materials and Research will display the inspector's hammer stamp mark on the top of the bolt.

NOTE: Never add holes or openings to the metal pole or mast arm without approval from the Office of Bridge and Structural Design.

3. Concrete Strain Poles

   a. Ensure that concrete strain poles meet the requirements of Section 639 and detailed construction drawings.

b. Install concrete strain poles so that the angle of variance between the eye bolt on the pole and the span wire is less than ten degrees (10°).

c. Verify pole hole orientations for pedestrian heads, pedestrian push button stations, luminaries arms, etc., with the Engineer prior to proceeding with traffic signal installation. For poles at cabinet location provide at least two 2.5 inch (64 mm) openings at the top of pole and at least two 2.0 inch (50 mm) threaded openings at the bottom.

d. Plug all unused holes. Use Grout or threaded fittings. Match the finish of the pole.

4. Mast Arms

Install mast arms that can accommodate traffic signal mounting hardware and that adhere to the manufacturer's recommended procedures and Section 925 and Section 915. Do not add holes.

a. Seal the openings in the mast arms to prevent pests from entering.

b. Align the mast arm to allow the signal heads to hang plumb at the correct height without using extensions.

c. All Mast arms are to be galvanized unless indicated otherwise in the Plans.

NOTE: The Contractor shall submit a "Mast Arm Pole Chart" to the Engineer and the Office of Bridge and Structural Design for review and approval as described in Subsection 647.1.03.F of this Specification.

Verify pole hole orientations for pedestrian heads, pedestrian push button stations, luminaries arms, etc., with the Engineer prior to proceeding with traffic signal installation.

5. Aluminum Pedestrian Pedestals Poles

Install aluminum pedestal poles, which adhere to Section 850 on breakaway aluminum bases that meet the requirements for breakaway construction. See Section 925 for breakaway base requirements. See the Standard Detail Drawings for Pole and Foundation Details.

a. Secure at least four anchor bolts in a concrete foundation as shown in the construction Detail.

b. As an alternate to a concrete foundation install a Pedestal Foundation Anchor Assembly (Subsection 925.2.29). Install the foundation until the top of the base plate is level with the ground. Slide bolt heads through the keyhole and under the base plate against the bolt head keepers with threads up. Bolt the pole base to the foundation. Adhere to the manufacturer's instructions for installation.

1) Use a Universal Driving Tool with the correct kelly bar adaptor and bolts supplied with the tool.

2) Attach driving tool assembly to the foundation base plate using the bolts provided with each foundation. Be sure to align the tool soothe holes in the tool line up with the proper bolt circle on the foundation.

3) Stand the foundation, with the attached drive tool assembly, upright and attach the drive-tool-foundation to the kelly bar.

4) Raise the kelly bar until the foundation swings free of the ground. Maneuver the kelly bar until the point of the foundation is over the marked installation location.

5) Lower the kelly bar until the point of the foundation is forced into the ground and the helix is flush with the ground surface.

6) Ensure the shaft of the foundation is plumb by checking the shaft with a level on two sides that are at least 90 degrees from each other. Recheck the shaft to be sure it is plumb when the foundation has penetrated 1 foot into the ground.

7) When the base plate of the foundation is 1 (25 mm) to 2 (50 mm) inches above the ground line remove driving tool.

c. Contain the wiring inside the pole or in approved hardware. Do not allow conduit outside the pole.

d. Position the pedestal pole plumb and high enough to clear the pedestrian's head as shown in the Plans. Ensure that the bottom of the pedestrian signal housing including brackets is not less than 10 feet (3 m) from the ground line. If using a vehicle signal housing ensure pole is adequate to give signal head a height of 12 feet (3.6 m)

e. Instruct the supplier to furnish a mill certificate that shows the alloy and physical properties of the steel used in fabricating the anchor bolts. The bolts may be subjected to a tensile and shear strength test.

6. Timber Poles

Timber poles do not require the use of concrete for filling the cavity around the pole base.

Use timber poles that meet the requirements of Section 861 and Section 639. Use Class II for all signal support poles. Use Class IV for aerial loop lead-in or communication cable if approved by the Engineer. Poles shall be inspected and include AWW stamp.

Drill wood poles to receive the eye bolt so that the angle of variance between the eye bolt and span wire at each connection is less than ten degrees (10º). See the Standard Detail Drawings for additional information.

Guy timber poles use single or double guy wires as shown in the Plans and as directed by the Engineer. Guy helper cables with separate guy wires when helper signal span cables are indicated in the Plans.

NOTE: Never attach down guy wires to eye bolts. Attach down guy wires to angle guy attachment only and install insulating rods on all down guy installations as detailed on Standard Detail Sheets.

AA. Pull Boxes

Ensure that pull boxes conform to the Standard Detail Drawings or Plan Detail Sheet. Install pull boxes as required by the Specifications and Plans.

1. Include provisions for drains in pull box excavations as specified.
2. Do not place the aggregate for the drain until the Engineer approves the excavation.
3. Do not set the pull box until the aggregate is in place.
4. Set the pull boxes in place, level, and install conduits as required. Conduit entrance shall be through the open bottom in Types 1, 2, 3, 4S and 5S. Conduit entrance shall be directly through cored holes in the side walls in Types 4 and 5. Conduit entrance shall be through the conduit terminators in Types 6 and 7.

   Adjust the location of the pull box if necessary to avoid obstacles.

   Where conduit entrance will be through the side wall in Types 4 and 5, or for conduit other than the terminator size provided in Types 6 and 7, use field cored conduit entrance holes in the side wall of the box. All field coring shall be made with a diamond-tipped masonry hole saw and according to the pull box manufacturer's recommendations.

   Use an approved HDPE to EPVC coupling or an underground-type conduit adhesive where joining conduit or conduit bodies of dissimilar materials, such as HDPE-to-EPVC sweeps into pull boxes or installing into pull box conduit terminators.

   - Do not locate pull boxes on the curb side of the signal pole in the intersection radius return
   - Install pull boxes so that the long dimension is parallel to the adjacent roadway
   - Install the pull box at a location that is level with the surrounding ground or pavement. Do not place a pull box in a ditch or depression. Unless otherwise shown in the Plans, when installed either in a sidewalk or in the ground, the top of the pull box shall be level with the sidewalk or ground surface.
5. Obtain the Engineer's approval, and begin backfilling and installing the frame and cover. Ground metal lids or covers.

BB. Span Wire and Span Wire Assemblies

Use span wire to support signal heads, cable, and other hardware only. Use messenger cable to support the aerial cable plant. Install span wire and messenger wire where specified in the Plans and in accordance with the Standard Detail Drawings. See Section 925 for information on span wire and messenger cable.

1. Install signal span wire not to exceed the sag specified by the pole manufacturer. Span wire used with timber pole installation shall have a minimum 2.5% sag. Span wire used with strain pole installation shall have a minimum 5% sag.
2. Use helper cables where specified in the Plans and on the Standard Detail Drawings.
3. For construction of a box or modified box span, use bullrings. Be consistent throughout the intersection in use of bull rings or strandvises. If bull rings are not used, standvises shall be interlocked.

4. Install 12 inch (300 mm) diameter drip loop wrapped three times at the cable entrance to signal heads. Arrange cable so that it enters the structure from the bottom of the drip loop. Use a 24 inch (600 mm) diameter drip loop where cables enter a weatherhead and use 24 inch (600 mm) sag at corners of a span.
5. Use aluminum ties, lashing rods, or aluminum wrap to attach cables to span wire. When using aluminum wrap or aluminum ties spaced at 6 inch (150 mm) increments. Aluminum wrap shall have at least three turns of wrap. Do not use lashing wire on span wire.
6. Ground all span wire and down guy assemblies as shown on Standard Detail Sheets. Bond all span wire together and bond to ground at every pole.

CC. Traffic Signal Heads

Place traffic signal heads according to the signal design and Plan Detail Drawings. Deviation from the Plans must be according to the MUTCD, current edition and at the Engineer's approval. Ensure all Traffic Signal Heads at an installation have the same appearance for the signal heads and the LED Modules. The Ramp Metering enforcement device shall be mounted on the back of one signal per lane and wired to the red display. The enforcement device shall be able to be viewed from downstream on the ramp.

1. Install traffic signal heads at least 17 feet (5.1 m), but no greater than 19 feet (5.7 m) over the roadway. All vertically attached signal head assemblies shall have a metal support plate installed within the top section (RED) indication of the signal head for additional support and stability. Install Ramp Metering traffic signal heads as shown on the Plans Detail Drawings.
2. Adjust signal heads on the same approach to have the same vertical clearance.
    a. Measure the clearance from the pavement to the lowest part of the assembly, including brackets and back plates.
    b. Mount traffic signals on poles with a clearance of at least 12 feet (3.6 m) but no more than 19 feet (5.8m) above the sidewalk or pavement grade of the center of the highway, whichever grade is higher.
    c. Mount and adjust Ramp Metering traffic signals as per the Plan Detail Drawings.
    d. Mount and adjust Ramp Meter enforcement device (head) as per the Plan Detail Drawings.
3. Connect the signal cable to the wire in each signal head to provide the correct signal indication when the cables are connected to the controller cabinet back panels. Do not splice cables. Use wire nuts to make the connections to the LED signal modules leadin. Make all connections in the top section. Ensure that the black jacket is pulled into the signal head 6 inches (150 mm).
4. Install optically programmable (OP) signal heads as shown in the Plans and Standard Detail Sheet and as directed by the manufacturer.
5. Mount OP heads securely or tether them to limit movement.
6. Mask the OP lamp for directing visibility under the Engineer's supervision.
7. Tether signal heads that have tunnel visors longer than 12 inches (300 mm), at the discretion of the Engineer.
8. Attach signal heads to mast arms using rigid mounting brackets. See Section 925 for equipment information. Adjust signal heads on mast arms so that all red indications on the same mast arm are at the same elevation.
9. Install lane control heads for reversible lane systems and Ramp Metering heads as shown in the Plans and the Standard Detail Drawings. Center each signal over the lane or lanes under signal control.
10. Leave a vertical clearance for blank-out signs as shown on the Standard Detail Drawings. Use a spirit level to ensure that the bottom edge of each sign is horizontal.
11. All LED modules shall be labeled with their turn on date on the backside of the LED insert.

DD. Pedestrian Signal Heads

Install pedestrian signal heads on wood, concrete, steel strain poles, wood or steel auxiliary poles, or metal pedestal poles. Do not mix pole mount methods at the same intersection installation.

Install the pedestrian signal heads as shown on the Standard Detail Drawings and the intersection Plan Sheets and Drawings.

Leave a vertical clearance from the bottom of the head to the ground level of least 10 feet (3 m) unless specified by the Engineer.

1. Pedestal Mounts

   Make pedestal mounts with a lower supporting assembly consisting of:

   a. A 4 inch (100 mm) slip-fitter bracket

   b. Hollow aluminum arms with a minimum inside cross-sectional area equal to a 1.5 inch (38 mm) pipe

   Use serrated locking devices that firmly hold the signal heads in the required alignment.

   c. For Pedestal Mounts using side hinge "clamshell". Secure "clamshell" to pedestal using 0.75 inch (19 mm) wide and 0.30 inch (0.75 mm) thick stainless steel bands.

2. Pole Mounts (Side of Pole)

   For Metal poles, use side hinge "clamshell" mounting hardware or hardware as described in Wood Pole, Metal Pole alternate, or pedestrian pole.

   a. Side Hinge "Clamshell"

      - Secure the hubs to metal or concrete poles using 0.75 inch (10 mm) wide and 0.030 inch (0.75 mm) thick stainless steel bands. Secure the hubs to wood poles using lag bolts.

   b. Wood Pole or Metal Pole alternate:

      Make pole mounts with the upper and lower assembly consisting of:

      - A post arm with a minimum cross-sectional area equal to a 1.5 inch (38 mm) pipe
      - A post hub plate that matches the outside pole contour
      - Secure the hubs to metal or concrete poles using 0.75 inch (19 mm) wide and 0.030 inch (0.75mm) thick stainless steel bands. Secure the hubs to wood poles using lag bolts, or banding.

   Space the junctions so that each pedestrian signal head can be directed toward approaching traffic as needed.

   Use serrated locking devices that hold the pedestrian signal heads in alignment.

EE. Blank-out Signs

Install blank-out signs as shown on Plans or as follows:

1. Securely fasten the signs to a stationary structure or to a messenger strand support system.
2. Center each sign over the lane or lanes under sign control, where applicable.
3. Leave a vertical clearance for blank-out signs as shown in the Plans or in Subsection 647.3.05.EE, "Traffic Signal Heads." Use a spirit level to ensure that the bottom edge of each sign is horizontal.
4. Use terminal strips to connect each sign electrically to the external control box or cabinet.

FF. Battery Backup System (BBS)

Install Battery Backup System (BBS) if indicated on the Plans. Install in accordance with the option as indicated on the Plans and as directed by the Engineer.

With the Battery Backup submittal provide calculations for determining the size of the inverter and batteries based on the actual power requirements for the intersection installation. Ensure that all auxiliary items are included in the calculations. Ensure the submittal specifies the model number and the firmware revision that is being supplied.

Ensure that the external cabinet supplied meets the Section 925 Specifications and is base mounted next to the 332A cabinet as specified. Do not attach the battery external cabinet to the 332A cabinet unless otherwise specified. The external cabinet option allows for 2 separate configurations. Ensure that the correct configuration is installed in accordance with the Plans. Make all connections to the 332A cabinet through the base of the cabinets.

Provide date of manufacture of all batteries provided.

Ensure the BBS functions as required by the specifications. Ensure the "ON BATTERY" relay provides an input into the controller Alarm 2. Install the two hour run time circuitry from the normally open contacts in the BBS controller to the AC+ and the mercury coil terminal in the traffic signal cabinet.

Ensure that the BBS is enabled to communicate via Ethernet connection.

Provide copy of all documentation (Operation and Maintenance Manual) for items supplied. Include with documentation any communications firmware and cable required to interrogate the unit for status, setup or logs.

GG. Power Meters

Install Power Meters per GDOT Standard Drawings and Utility Provider's Specifications.

647.3.6 Quality Acceptance

A. Testing Loop Detector Installation

Test each loop after installing the conductors in the slots cut in the pavement and before sealing.

- Perform a test where the loop wire is spliced to the shielded lead-in wire and where the shielded lead-in wire enters the controller cabinet
- If there are no splice points, such as in direct entry to the controller cabinet, only perform the tests at the controller
- Record the test results on the Loop Installation Data Sheet in Table 647-10, as shown in this section. Make copies of the data sheet as needed.
- Include the data sheets in the records, and place a copy in the controller cabinet.

Conduct the following five (5) tests to evaluate each loop installation for acceptance before sealing the loop in the pavement:

1. Induced AC Voltage Test

   Read 0.05 V AC or less on a digital voltmeter or no deflection on the pointer of an analog meter.

2. Inductance

   Inductance (I) is measured in microhenries (mH), and the total inductance is equal to the inductance of loop plus inductance of the loop lead-in.

   Acceptable inductance is within 10 percent (10%) of the calculated value for a single loop with the design criteria listed in Table 647-8 and Table 647-9:

Table 647-8 Standard (Bi-Pole) Loops	
6 ft x 6 ft (3 turns) [1.8 m x 1.8 m (3 turns)]	I = 76 mH + 23 mH per 100 feet of loop lead-in cable I = 76 mH + 23 mH per 30 m of loop lead-in cable
6 ft x 30 ft (2 turns) [1.8 m x 9 m (2 turns)]	I = 126 mH + 23 mH per 100 feet of loop lead-in cable I = 126 mH + 23 mH per 30 m of loop lead-in cable
6 ft x 40 ft (2 turns) [1.8 m x 12 m (2 turns)]	I = 165 mH + 23 mH per 100 feet of loop lead-in cable I = 165 mH + 23 mH per 30 m of loop lead-in cable
6 ft x 50 ft (2 turns) [1.8 m x 15 m (2 turns)]	I = 205 mH + 23 mH per 100 feet of loop lead-in cable I = 205 mH + 23 mH per 30 m of loop lead-in cable
6 ft x 70 ft (2 turns) [1.8 m x 21 m (2 turns)]	I = 285 mH + 23 mH per 100 feet of loop lead-in cable I = 285 mH + 23 mH per 30 m of loop lead-in cable

Table 647-9 Quadrupole (QP) Loops	
6 ft x 30 ft (2, 4, 2 turns) [1.8 m x 9 m (2, 4, 2, turns)]	I = 269 mH + 23 mH per 100 feet of loop lead-in cable I = 269 mH + 23 mH per 30 m of loop lead-in cable
6 ft x 40 ft (2, 4, 2 turns) [1.8 m x 12 m (2, 4, 2 turns)]	I = 349 mH + 23 mH per 100 feet of loop lead-in cable I = 349 mH + 23 mH per 30 m of loop lead-in cable
6 ft x 50 ft (2, 4, 2 turns) [1.8 m x 15 m (2, 4, 2, turns)]	I = 429 mH + 23 mH per 100 feet of loop lead-in cable I = 429 mH + 23 mH per 30 m of loop lead-in cable
6 ft x 60 ft (2, 4, 2 turns) [1.8 m x 18 m (2, 4, 2, turns)]	I = 509 mH + 23 mH per 100 feet of loop lead-in cable I = 509 mH + 23 mH per 30 m of loop lead-in cable
6 ft x 70 ft (2, 4, 2 turns) [1.8 m x 21 m (2, 4, 2, turns)]	I = 589 mH + 23 mH per 100 feet of loop lead-in cable I = 589 mH + 23 mH per 30 m of loop lead-in cable

3. Leakage Resistance to Ground

   The resistance to ground shall be 5 Mohm or more.

4. Loop Resistance

   The resistance reading on an ohmmeter is approximately within ten percent (10%) of the calculated value:

   - Acceptable Resistance @ (dc @ 68 ºF [20 ºC]):ohms(µ)
   - No. 18 AWG wire: R = 29.4µ/mile (or) R = 5.5 x 10^{-3}µ/ft. Approximately 5.5 ohms per 1,000 feet of No. 18 AWG wire)[R = 18.3µ/km (or) R=18.3 x 10^{-3}µ/m]
   - No. 14 AWG wire: R = 13.32µ/mile (or) R = 2.523 x 10^{-3}µ/ft. Approximately 2.52 ohms per 1,000 feet of No. 14 AWG wire)[R = 8.3µ/km (or) R=8.3 x 10^{-3}µ/m]
   - No. 12 AWG wire: R = 5.2µ/mile (or) R = 9.85 x 10^{-4}µ/ft. Approximately 0.98 ohms per 1,000 feet of No. 12 AWG wire [R = 3.24µ/km (or) R = 3.24 x 10^{-3}µ/m]

5. Loop Q

   Q at 50 kHz is greater than 5.

   Report to the Engineer an out-of-range reading on any of the above tests. If a test is found unacceptable, remove the loop, install new wire, and repeat the test procedure.

   Include in the test results:

   - Type and model number of the equipment used (must be ohmmeter having a high resistance scale of R x 10 KW or greater)
   - The last calibration date of the equipment and the scale used

   Check the loop using an impedance tester to determine the natural operating frequency and impedance. Ensure that the completed units detect all motor vehicles. If the loop detection system does not meet the above test requirements, payment will not be made for work on the signal installation until corrections are completed.

Table 647-10 Loop Installation Data Sheet	
Conditions	
Project Number:	
Date:	
Contractor:	
Weather:	
Temperature:	
Pavement Condition - Wet ( ) or Dry ( )	
Location	
City or County:	Phase:
Intersection Name or Number:	Function:
Route Number(s) or Name (s):	Lane Location:
Installation or Plan Sheet Number:	No. of Turns:
Size and Type of Loop:	Downstream/Upstream: Down ( ) Up ( )
Distance from Stop Bar:	Distance E.O.P/Curb to Lead-in:
Distance Lead-in Cable:	
Material	
Loop Wire Color/Insulation Type/Gauge:	
Loop Lead-In Wire Color/Insulation Type/Gauge:	
Splice Point:	
Conduit Length from Curb/E.O.P. to Splice Point:	
Conduit Length from Splice Point to Cabinet:	
Sealant Type and Part Number:	
Sealant Manufacturer and Lot No.:	
Interconnect Wire Type and Length:	
Loop Tests	
1. Induced Voltage_____2. Inductance_____microhenries 3. Leakage Resistance to Ground_____megohoms 4. Loop Resistance_____ohms 5. Loop Q (Quality) _____Q	
Comments	
Inspector's Name, and Title	

B. Field Tests

In addition to performing tests during installation and before turning on the equipment, perform the following tests on traffic signal circuits in the presence of the Engineer:

- Test each circuit for continuity

Test each circuit for grounds. If a test fails, repair the circuit immediately. New signals shall operate in the flash mode for three (3) days prior to beginning stop-and-go operation unless otherwise directed by the Traffic Engineer.

For Ramp Metering:

The Contractor shall submit to and obtain approval from the Engineer for Ramp Metering testing procedures for each specific Ramp Meter location. The testing procedure shall demonstrate that all components: hardware, cable, and connections furnished and installed by the Contractor operates correctly and that all functions are in conformance with the specifications.

At a minimum, the Contractor shall demonstrate to the Engineer:

- The IVDS and loop detectors at each location are functioning properly with expected accuracy as specified. IVDS burn-in period shall only be in conjunction with the Ramp Meter signal burn-in periodof 30days.
- The Ramp Meter signals function properly at all stages, including non-metering, startup, metering, and shutdown.
- In multi-lane configurations, the Ramp Meter can operate a simultaneous release of vehicles from all lanes and as well as an alternating or staggered release of vehicles from the two (or three) lanes.-
- Queue detectors are functioning as specified, including both queue detection and queue override.
- The Ramp Meter functions properly for both local traffic responsive and time of day operations.
- The advance warning sign can be clearly seen and can be activated and deactivated properly.
- The Ramp Meter can communicate properly with the hub/TMC.
- The traffic enforcement heads are operating as per the Plans and can be seen by enforcement personnel.

The Contractor shall coordinate closely with Engineer for conducting Ramp Meter field operational tests. Note: Pretest should be performed prior to calling the Engineer for formal field tests inspection. Pretest shall be defined as conducting all field tests in accordance with the Ramp Metering field testing procedures submitted and approved. Results of pretests shall be recorded and submitted to the Engineer. The Engineer may require the Contractor to address particular items noted in the pretest before beginning the actual fieldtests.

Operational test shall not begin until the field tests are accepted by the engineer that will be performed during the Engineer's inspection. Begin operational tests after the Engineer is satisfied that all work has been completed. After the Ramp Meter has been placed in operation, the Contractor, in coordination with the system integrator, shall demonstrate that all equipment furnished and installed by the Contractor operates with all software and firmware as specified.

After successful completion of the test procedure, each Ramp Meter assembly shall go through a burn-in period for 30 consecutive days of normal Ramp Metering operations. During the burn-in period, the Contractor shall ensure that all Contractor-supplied equipment operates without failures of any type. If any equipment component malfunctions or fails to provide the specified functionality during the 30-day burn-in period, the Contractor shall replace or repair the defective equipment within 48 hours of notification by the Engineer.

After the malfunctioning component(s) have been repaired or replaced to the satisfaction of the Engineer, the Contractor shall begin a new 30-day burn-in period. The new 30-day burn-in period shall apply only to equipment components supplied by the Contractor. In the event of a failure or malfunctioning of equipment furnished by others which prevents the 30-day burn-in test from continuing, the Engineer will suspend the burn-in test and resume when the other equipment failures are corrected.

C. Operational Tests and Equipment Activation

After the equipment is installed and the field tests are completed successfully the Contractor shall request an initial equipment inspection. The Engineer shall notify in writing the District Signal Engineer a minimum of 14 working days prior to the inspection. The District Signal Engineer shall provide an in depth inspection and provide a written punch list of items for the Contractor to correct. Within fourteen days of the notification the Contractor shall correct the items noted.

Prior to activating new equipment and before removal of any existing intersection control or equipment, test and ensure any communications equipment is functional.

In the event that programming of the controller application is not a pay item for the contract the Engineer will notify the District Signal Engineer a minimum of 14 working days prior to activating the equipment.

Prior to activating equipment all Inductance loop, video detection equipment and detection zones shall be functional and operational.

When defects are resolved, the District Signal Engineer will begin the Contractor's operational test period to demonstrate that every part of the system functions as specified. The operational test shall be concurrent for the entire project.

1. The operational test for the traffic signal and Ramp Metering projects shall be at least thirty (30) days of continuous, satisfactory operation.
2. If a component or system fails or shows unsatisfactory performance, the condition must be corrected and the test repeated until thirty (30) days of continuous satisfactory operation is obtained.
3. The District Traffic Engineer will send the Engineer and Construction Office a letter showing the start, termination, suspension, or successful completion of the operational test period.
4. The District Engineer may recommend payment only after the successful completion of the test period.
5. The Contractor shall obtain written acceptance of the signal installation from the District Traffic Operations Engineer before Final Acceptance.

Costs incurred during operational tests, including power consumption, shall be at the Contractor's expense and included in the price bid for Contract Items.

647.3.7 Contractor Warranty and Maintenance

A. Traffic Signal Equipment Maintenance

See Section 150.

If a signal that is the responsibility of the contractor is not functioning properly:

1. Non-Emergency

   Commence work on this signal within three (3) days of the written notice from the Engineer. Failure to respond shall result in a per calendar day charged against monies due or that may become due until the maintenance work is started. See Section 108.

   The Contractor shall be responsible for all materials, equipment and expertise necessary to correct signal malfunction or repair.

   The Department or local municipality will not be held responsible or liable for any alleged damage to the signal or as a result of the signal malfunction due to problems that may occur after the Department or local municipality forces make repairs.

   Upon Notice to Proceed, The Contractor shall check and make any needed adjustments to time clocks on a monthly basis. No additional payment shall be made for this requirement.

2. Emergency

   If the Engineer determines that the signal malfunction or failure is an operational hazard, the Contractor is to take corrective action within three (3) hours of the first attempt of notification. Response shall be considered only when qualified personnel and equipment are provided.

   Failure to respond within three (3) hours will result in a non-refundable deduction of money of $1,000.00 with an additional charge of $500.00 per hour after the first three (3) hours until qualified personnel and equipment arrives on site and begins corrective action.

   In addition, the cost of labor and material will be charged by the Department if the Department takes corrective action using its own forces or local municipality forces.

   Total charges will not exceed $5,000.00 (per emergency call) in addition to the material cost and labor incurred to make repairs by the Department or local municipality forces responding to the malfunction.

   The Department will not be held responsible or liable for any alleged damage to the signal or as a result of the signal malfunction due to problems that may occur after Department or local municipality forces make emergency repairs.

The Contractor shall be responsible for all materials and equipment necessary to correct signal malfunction or repair.

Final Acceptance will not be given until payment for such work is received.

B. Warranties

Provide manufacturer's warranties or guarantees on electrical, electronic, or mechanical equipment furnished, except state-supplied equipment.

Ensure that warranties and/or guarantees are consistent with those provided as customary trade and industry standard practices; or as otherwise specified in the Plans, Standard Specifications, or Special Provisions.

Upon Final Acceptance, transfer the manufacturer and Contractor warranties or guarantees to the Engineer. Ensure that warranties are continuous and state that they are subject to transfer.

Acceptance or approval of the Work does not waiver warranties or guarantees where required by the Specifications. Final Acceptance will not be granted until all warranties and guarantees are received.

C. Guarantees

Repair and/or replace all equipment and material supplied under these Contract Documents which has been determined by the Engineer to not meet Specifications.

The Engineer reserves the sole right to determine suitability or unsuitability of the supplied equipment and material. The Contractor shall bear the total cost of delivery and transportation related to the repair and replacement of equipment and material throughout the duration of the Contract unless otherwise approved by the Engineer.

Transfer to the Engineer any warranties and guarantees remaining on all items after Final Acceptance. Perform transfer at 12:01 AM of the day following Final Acceptance.

647.4 Measurement

647.4.01 General

Traffic signal items complete, in place, and accepted of the kind, size, and type specified are measured as follows:

A. Traffic Signal Installation

Signal installation will be paid for by lump sum, including furnishing labor, materials, tools, equipment, and incidentals required to complete the work unless otherwise specified in this Subsection.

B. Communications Wire, Fiber Optic Cable

The number of feet (meters) of communications cable, wire or fiber optic cable is the actual number of linear feet (meters) of the size installed and accepted. Communications cable shall be paid for under Section 935.

B. Strain Poles, Traffic Signs

Highway signs are measured and paid for under Section 636. Strain poles are measured and paid for under Section 639.

C. Type 4, 4S, 5, 5S, 6 and 7 Pull Boxes

The number of pull boxes will be the actual number of pull boxes installed and accepted.

D. Loop Detector – Maintenance Milling and Resurfacing Projects

The number of loop detectors will be the actual number of loop detectors installed as specified in the Plans or as directed by the Engineer and accepted. Loop detector lead-in cable will not be measured separately for payment but will be included in the price submitted for Loop Detectors.

647.4.02 Limits

General Provisions 101 through 150.

647.5 Payment

647.5.01 General

The lump price bid for Traffic Signal and/or Ramp Meter Installation covers all Items of work in this Specification including furnishing labor, materials, tools, equipment, and incidentals required to complete the work.

Costs for installation, operation, maintenance, and removal of the traffic signal equipment are included under this Item.

Include payment for removal; disposal of existing pavement, shoulder surface, base and sub-grade; and restoration to original condition in the Contract Price for the items to which they pertain. They will not be paid for separately.

Furnishing, installing, and removing sheeting, bracing, and supports will not be paid for separately, but is included in the Contract Prices for other items.

No additional payment will be made for testing and storing State-supplied or Contractor-furnished traffic signal equipment.

No payment will be made for individual items unless a pay item is included in the Plans for the specific item.

Type 4, 4S, 5, 5S, 6, and 7 pull boxes will be paid for per each. Loop Detector will be paid for per each.

Payment will be made under:

Item No. 647	Traffic signal installation no-	Per lump sum
Item No. 647	Pull Box PB4	Per each
Item No. 647	Pull Box PB4S	Per each
Item No. 647	Pull Box PB5	Per each
Item No. 647	Pull Box PB5S	Per each
Item No. 647	Pull Box PB6	Per each
Item No. 647	Pull Box PB7	Per each
Item No. 647	Loop Detector	Per each

Payment for various elements of traffic signals will be as shown on the Plans.

A. Partial Payment

The Contractor may initiate a partial payment process for the lump sum traffic signal Items by submitting a written request to the Engineer. If the Engineer approves this request, payment will be made as follows:

Underground (loops, pull boxes, and conduits)	20%
Overhead (span, heads, poles, push buttons)	30%
Cabinet, contents, and base	20%
Successful completion of operational test	10%

B. Additional Items

Payment Items related to Section 647 are described in the following sections:

Strain Poles	Section 639
Highway Lighting	Section 680
Lighting Standards and Luminaries	Section 681
Electrical Wire, Cable, and Conduit*	Section 682
Grassing	Section 700
Timber Poles	Section 639 and Subsection 861.2.02
Sign Blanks	Section 912
Reflectorization Materials	Section 913
Traffic Signal Equipment/Ramp Metering Equip.	Section 925
* Payment for conduit installation shall be as described in Section 682 unless conduit installation is performed as part of a traffic signal installation, in which case measurement and payment is a part of the complete traffic signal installation. Payment is Lump Sum, unless listed as a separate pay item.	

647.5.02 Adjustments

General Provisions 101 through 150.

July 17, 2013
Revised May 16, 2014
Revised May 09, 2016
Revised July 7, 2016
Revised August 22, 2016
Revised April 12, 2017

DEPARTMENT OF TRANSPORTATION

STATE OF GEORGIA

SPECIAL PROVISION

PROJECT NO: BRMLB-3223-00(006) & STP00-3223-00(002), Bibb County

PI NO: 342080/351095

Section 660—Sanitary Sewers

Delete Section 660 and substitute the following:

660.1 General Description

This Work consists of furnishing materials, labor, tools, equipment, and other items necessary for installing, removing, abandoning, relocating, and adjusting sanitary sewer and force main systems and appurtenances to the Plans and Specifications.

660.1.01 Definitions

A. General Provisions 101 through 150

B. Whenever the terms "MWA" or "Authority," are used in this Special Provision and its related documents, it shall be understood to mean the Macon Water Authority, its subsidiaries, successors and/or assigns, hereafter referred to as Utility Owner.

C. The term "Project Manager" shall mean the authorized individual having the authority to give instructions pertaining to the work and to approve or reject the work. The "Project Manager" shall not however be authorized to revoke, alter, enlarge, relax, or release any requirements of the Contract, Plans, and Specifications, nor shall they act as an agent for the Contractor. All Contract items pertaining to the Utility Owner shall be coordinated with the Georgia Department of Transportation's (GDOT) Project Manager and the Utility Owner.

660.1.02 Related References

A. Standard Specifications

Section 104—Scope of Work

Section 107—Legal Regulations and Responsibility to the Public

Section 108—Prosecution and Progress

Section 205—Roadway Excavation

Section 207—Excavation and Backfill for Minor Structures

Section 400—Hot Mix Asphaltic Concrete Construction

Section 444—Sawed Joints in Existing Pavements

Section 500—Concrete Structures

Section 600—Controlled Low Strength Flowable Fill

Section 615—Jack or Boring Pipe

Section 611—Relaying, Reconstructing, or Adjusting to Grade of Miscellaneous Roadway Structures

Section 668—Miscellaneous Drainage Structures

Section 800—Coarse Aggregate

Section 801—Fine Aggregate

Section 810—Roadway Materials

Section 812—Backfill Materials

B. Related Documents

1. General Provisions 101 through 150.
2. All products supplied and all work performed shall be in accordance with the MWA Standards for Design and Construction Specifications– Article II, applicable standards from American Society for Testing and Material (ASTM), American Water Works Association (AWWA), American National Standards Institute (ANSI), GDOT Utility Accommodation Policy and Standards, and the Georgia Environmental Protection Division (EPD) Guidelines for Sewage Collection Systems. Latest revisions of all standards shall apply.

660.1.03 Submittals

A. General Provisions 101 through 150.

B. Refer to the MWA Standards for Design and Construction Specifications– Article II, current published edition, for sanitary sewer utility submittal requirements. Copies of all submittals and documentation shall be submitted to GDOT, who shall distribute to the Utility Owner. Submittals will be approved by Macon Water Authority and the Authority's Engineer.

C. Shop Drawings / Product Data

1. Submit [4] copies of the following submittals to the GDOT Project Manager:
   a. Product data, including size, dimension, capacity, pressure rating, accessories, and special features, installation instructions, and operating characteristics for all proposed materials to show compliance with the requirements of this Special Provision.
   b. Test reports specified in the Quality Acceptance section of this Special Provision.
   c. Pipe manufacturer certification of compliance with specifications.
   d. Operation and maintenance literature, warranties, and other specified information.

D. Construction Record Documentation (Macon Water Authority Specification 01720)

1. SCOPE

a. The work under this Section includes, but is not necessarily limited to, the compiling, maintaining, recording and submitting of project record documents as herein specified.

b. Record documents include, but are not limited to:

i. Drawings;

ii. Specifications;

iii. Change orders and other modifications to the Contract;

iv. Engineer field orders or written instructions, including Requests for Information (RFI) and Clarification Memorandums;

v. Reviewed shop drawings, product data and samples;

vi. Test records.

c. The Contractor shall maintain on the Project site throughout the Contract Time an up to date set of Record Drawings.

2. MAINTENANCE OF DOCUMENTS AND SAMPLES

a. Storage

i. Store documents and samples in the Contractor's field office, apart from documents used for construction.

ii. Provide files and racks for storage of documents.

iii. Provide locked cabinet or secure storage space for storage of samples.

b. File documents and samples in accordance with format of this Special Provision.

c. Maintenance

i. Maintain documents in a clean, dry, legible condition and in good order.

ii. Do not use record documents for construction purposes.

iii. Maintain at the site for the MWA one copy of all record documents.

d. Make documents and samples available at all times for inspection by MWA Engineer.

e. Failure to maintain the Record Documents in a satisfactory manner may be cause for withholding of a certificate for payment.

3. QUALITY ASSURANCE

a. Unless noted otherwise, Record Drawings shall provide dimensions, distances and coordinates to the nearest 0.1 foot.

b. Unless noted otherwise, Record Drawings shall provide elevations to the nearest 0.01 foot for all pertinent items constructed by the Contractor.

c. The Contractor shall employ a currently registered professional engineer to prepare the Record Drawings from a post-construction, field run survey. The Record Drawings shall provide elevations to the nearest 0.01 foot for all manhole inverts, manhole frames and other pertinent items constructed by the Contractor. The Record Drawings shall show sanitary sewer size, material and lateral locations with sizes. The Record Drawings shall provide dimensions, distances, and coordinates to the nearest 0.01 foot and horizontal angles to the nearest 10 seconds.

4. RECORDING

a. Label each document "PROJECT RECORD" in neat, large printed letters.

b. Recording

i. Record information concurrently with construction progress.

ii. Do not conceal any work until required information is recorded.

5. RECORD DRAWINGS

a. Record Drawings shall be reproducible, shall have a title block indicating that the drawings are Record Drawings, the name of the company preparing the Record Drawings, and the date the Record Drawings were prepared. The Contractor will provide drawings submitted in either the (.dxf) or the (.dwg) version R13 or later on a non-rewritable (Read Only) CD, along with two (2) sets of plans in the same format as shown on the disk. The Record Drawings shall be submitted on a (24" x 36") sheet.

b. Legibly mark drawings to record actual construction, including:

i. All Construction

1. Changes of dimension and detail.

2. Changes made by Requests for Information (RFI), field order, clarification memorandums or by change order

3. Details not on original Drawings

ii. Site Improvements, Including Underground Utilities

1. Horizontal and vertical locations of all exposed and underground utilities and appurtenances, both new facilities constructed and those utilities encountered, referenced to permanent surface improvements.

2. Location of and dimensions of roadways and parking areas, providing dimensions to back of curb when present.

3. The locations shall be referenced to at least two easily identifiable, permanent landmarks (e.g., power poles, valve markers, etc.) or benchmarks.

4. The Record Drawings shall include the horizontal angle and distance between manhole covers.

iii. Structures

1. Depths of various elements of foundation in relation to finish first floor datum or top of wall.

2. Location of internal and buried utilities and appurtenances concealed in the construction, referenced to visible and accessible features of the structure.

6. SPECIFICATIONS

a. Legibly mark each section to record:

i. Manufacturer, trade name, catalog number, and supplier of each product and item of equipment actually installed.

ii. Changes made by Requests for Information (RFI), field order, clarification memorandums, or by change order.

7. SUBMITTAL

a. Within two (2) weeks of all contract utility components entering service, deliver two (2) sets of Record Documents to the MWA Engineer.

b. Within two (2) weeks of all contract utility components entering service, deliver one (1) set of Record Documents to the DOT Project Manager.

c. Accompany submittal with transmittal letter, in duplicate, containing:

i. Date

ii. Project title and number

iii. Contractor's name and address

iv. Title and number of each record document

v. Signature of Contractor or Contractor's authorized representative

vi. Name and address of firm preparing record document

vii. Stamp by a professional engineer

660.1.04 Quality Assurance

A. The Contractor shall comply with applicable codes, ordinances, rules, regulations and laws of local, municipal, state or federal authorities having jurisdiction over the Project.

B. Furnish manufactured items, pipe, fittings, valves, service components, and appurtenances from manufacturers having regularly produced such items as specified herein which have proven satisfactory in actual service, over at least a 2-year period, or as approved by the GDOT and Utility Owner.

C. Regardless of tolerances permitted by industry standards specified herein, GDOT Project Manager may reject pipe or appurtenances at the manufacturing plant or project site which have cracks, chips, blisters, rough interior or exterior surface, evidence of structural weakness, joint defects, or other imperfections that might in the opinion of the Project Coordinators contribute to reduced functional capability, accelerated deterioration or reduced structural strength.

D. The Utility Owner and the Utility Owner's consultant shall have the right to visit and inspect the work at any time. The Utility Owner may also have an Inspector assigned to the project authorized to inspect portions or all of the utility work done and the preparation, fabrication, or manufacture of the materials to be used. The Utility Owner shall be able to advise GDOT Project Manager of any observed discrepancies or potential problems. The cost of these inspections shall be the responsibility of the Utility Owner.

E. GDOT shall notify the Utility Owner before authorizing any changes or deviations which might affect the Utility Owner's facilities. Contractor shall notify GDOT and Utility Owner a minimum of 24 hours prior to beginning work on utilities.

F. The Utility Owner shall be notified by GDOT Project Manager when all utility work is complete and ready for final inspection. The Utility Owner shall be invited to attend the final inspection and may provide a corrections list to GDOT Project Manager prior to the final inspection.

G. The Contractor shall verify the actual location and depth of all utilities prior to construction. All utilities and structures shall be protected during construction. Any damaged facilities shall be repaired or replaced at the Contractor's expense.

660.2 Materials

A. All materials provided shall be in conformance with the requirements and standards set forth in the [Name of Utility specification document], current published edition.

660.2.01 Sanitary Sewer Piping Systems and Appurtenances

A. Reinforced Concrete Pipe

1. Reinforced concrete pipe for gravity sewer applications 36 inch to 48 inch diameter shall conform to the requirements of ASTM C76 for circular pipe, Wall B or greater, for the specified diameter and strength class. If no class is specified, Class III pipe will be used. The interior surface of the pipe shall be a smooth, cylindrical surface. Cement shall meet all the requirements of ASTM C150, Type 1. No lifting holes shall be allowed. The pipe will be furnished complete with gaskets, grout bands and lubricant as required for proper installation. Pipe shall be designed for a 0.01-inch crack D-Load. The ultimate D-Load shall be at least 1.5 times the 0.01-inch D-Load.
2. The interior of all reinforced concrete pipe shall be fully lined (360°) with a PVC liner. Acceptable manufacturers are Ameron T-Lok, Poly-Teet, Inc. or approved equal. The liner shall be installed by the pipe manufacturer prior to pipe delivery.
3. The liner shall be field welded at each joint after installation.
4. Joints in reinforced concrete pipe 36 inches in diameter and greater shall have trapped O-ring gaskets meeting the requirements of ASTM C443. When required, concrete pipe ends shall be manufactured with steel bell and spigot end rings with a groove on the spigot for an O-ring rubber gasket. This joint shall meet the joint requirements of ASTM C 443 and ASTM C 361. The shape, dimensions and tolerances of the bell and spigot or tongue and groove ends of the pipe shall be accurately manufactured so that, when adjacent pipe sections are drawn together, the rubber gasket shall be uniformly compressed around the periphery of the pipe to provide a watertight seal.

B. Polyvinyl Chloride (PVC) Pipe

1. Force Mains shall be C900 PVC pipe diameters 4-inch (100 mm) through 12-inch (300 mm) shall meet ANSI/AWWA C900 requirements, and shall be a minimum pipe dimension ratio (DR) 18, Pressure Class 235 psi. C905 PVC pipe diameters 14-inch (350 mm) and greater shall meet ANSI/AWWA C905 requirements and shall be DR 18 minimum, Pressure Class 235 psi. Pipe shall have a bell with an integral wall section with a factory 4 inch to 15 inch diameter PVC gravity sewer shall be integral bell and spigot joint pipe, and shall comply with ASTM D3034 for pipes 15-inch (380 mm) and smaller, with minimum standard dimension ratio (SDR) 26. Pipes 18-inch to 24-inch shall comply with ASTM F679 with the minimum standard dimension ration (SDR) 26. Joints shall be of the bell and spigot gasketed type in accordance with ASTM D3212 and ASTM F477. 24 inch PVC gravity sewer pipe shall meet ANSI/AWWA C905 requirements for DR 18 minimum, Pressure Class 235 PSI. Pipe shall have a bell with an integral wall section with a factory installed solid cross section elastomeric ring in accordance with ASTM F477.
2. All PVC pipe shall be formulated for sunlight exposure and shall be green in color to designate wastewater.
3. PVC pipe shall have the same outside diameter (OD) as ductile iron pipe and be compatible for use with ductile iron fittings.
4. Fittings for PVC pipe 4 inches (100 mm) and larger shall be ductile iron mechanical joint and comply with the requirements set forth in the specifications for Ductile Iron Pipe and Fittings.
5. Restrained Joints: Restrained joints shall be provided as shown on the Plans and where required for thrust restraint. Restrained joints shall comply with the requirements set forth in the specifications for Ductile Iron Pipe and Fittings, with assembly in conformance with AWWA C600 and manufacturer's recommendations.
6. Unless specified otherwise in the Plans, 2-inch (50 mm) and 3-inch (80 mm) diameter PVC pipe shall conform to the requirements of ASTM D2241 Class 1120 or 1220 (SDR 21) with a working pressure rating of 200 psi with integral bell gasketed joints. Pipe is to be manufactured to IPS standard pipe equivalent outside diameters.
7. Schedule 80 PVC pipes smaller than 4-inch (100 mm) nominal diameter shall be in accordance with ASTM D1785. Schedule 80 pipe shall have threaded joints. Solvent cemented joints shall not be used. Threaded type fittings for Schedule 80 PVC pipe shall be in conformance with ASTM D2464. All threaded joints shall be watertight.
8. Flanges for Schedule 80 PVC pipe shall be rated for a 150 psi working pressure with ANSI B16.1 dimensions and bolting pattern. Flanges shall be connected to PVC piping with threaded joints in accordance with ASTM D2467 or ASTM 2464, respectively.

C. Ductile Iron Pipe and Fittings

1. Ductile iron pipe shall meet the latest edition of ANSI/AWWA C150/A21.50 and C151/A21.51 for the class and joint specified with a nominal laying length of 18 (5.5 m) to 20 feet (6 m). Joints for buried ductile iron pipe shall be mechanical or push-on joints. Unless specified otherwise in the Plans or the MWA Standards for Design and Construction Specifications – Article II, Section 2.04 A ductile iron pipe diameters 12 inch (300 mm) or less shall be minimum Pressure Class 350, while pipe diameters greater than 12 inch (300 mm) shall be minimum Pressure Class 250.
2. Ductile iron pipe for the interior of structures and above ground installations shall be flanged. Flanges shall be ductile iron and shall be threaded-on flanges conforming to ANSI/AWWA C115/A21.15 or cast-on flanges conforming to ANSI/AWWA C110/A21.10. The minimum class thickness for ductile iron flanged pipe to be threaded is Class 53.
3. Interior surfaces of ductile iron pipe and fittings shall be ceramic epoxy lined. The standard of quality is Protecto 401 Ceramic Epoxy. Epoxy lining shall be 40-mil nominal dry film thickness. The interior of the ductile iron pipe and fittings shall not have been lined with any substance prior to the application of the specified lining material and no coating shall have been applied to the first 6 inches (150 mm) of the exterior of the spigot ends. The lining shall be applied by a competent firm with a successful history of applying linings to the interior of ductile iron pipe and fittings. Surface preparation, lining of pipe, coating of bell sockets and spigot ends, number of coats, and touch up and repair shall be in accordance with the manufacturer's recommendations. The pipe or fitting manufacturer shall supply a certificate attesting that the applicator met the requirements of this specification; that the material used was

as specified; that the linings have the nominal dry film thickness specified; and that the linings have no pinholes when tested with a nondestructive 2,500-volt test. Lined pipe and fittings shall be handled only from the outside of the pipe and fittings.

4. Ductile iron shall have an exterior asphaltic coating as specified in AWWA C151 for ductile iron pipe and AWWA C153/C110 for ductile iron fittings.
5. Buried ductile iron pipe and fittings shall be polyethylene encased at locations indicated on the Plans or as conditions warrant wherever the ductile iron pipe crosses a gas main. Polyethylene encasement tubing shall be in accordance with ANSI/AWWA C105/A21.5 and ASTM A674 and shall have a minimum thickness of 8 mils. Polyethylene tubing shall be green in color to designate wastewater.
6. Fittings: Ductile iron fittings shall be epoxy coated and meet the requirements of ANSI/AWWA C153/A21.53 or ANSI/AWWA C110 A21.10 with a minimum pressure rating of 250 psi. Pressure pipe fittings shall be restrained mechanical joint.
7. Mechanical Joint Fittings: Mechanical joints consisting of bell, socket, gland, gasket, bolts, and nuts shall conform to ANSI/AWWA C111/A21.11.
8. Push-On Joints: Push-on joints shall be designed in accordance with ANSI/AWWA C111/A21.11. Joint lubrication shall be as furnished by the manufacturer.
9. Rubber gasket joints for push-on or mechanical joints shall conform to the requirements of ANSI/AWWA C111/A21.11.
10. Restrained Joints: Restrained joints shall be provided as shown on the Plans and where required for thrust restraint. Restrained joints shall not require field welding or grooves cut into the pipe barrel for restraint. The restraining joints for mechanical joint fittings shall conform to the requirements of ANSI/AWWA C111/A21.11 with assembly in conformance with AWWA C600 and manufacturer's recommendations. Restrained joints for pipe shall be mechanical joints with ductile iron retainer or push-on type joints and shall have a minimum rated working pressure of 250 psi.
11. Mechanical joint retainer glands may be used to restrain mechanical joint pipe and fittings to the plain end of ductile iron pipe and fittings. Restrainer glands shall be manufactured of ductile iron per ASTM A536.
12. Corrosion-resistant bolts used with ductile iron joints shall be high-strength, low-alloy steel as specified in ANSI/AWWA C111/A21.11.
13. Welded Outlets: Welded outlets in ductile iron pipe shall be provided where specified and indicated on the Plans. Outlets shall be fabricated by welding sections of ductile iron pipe manufactured in accordance with ANSI/AWWA C151/A21.51. Welded outlet pipe shall be fabricated only by the pipe manufacturer. The minimum ductile iron pipe thickness for fabrication of welded outlet pipe shall be Thickness Class 53 for 4 inch to 54 inch (100 mm to 1350 mm) diameter pipe. All joints on welded-on branch outlets shall be provided in accordance with the latest revision of ANSI/AWWA C111/A21.11 and/or ANSI/AWWA C115/A21.15 as applicable. After the outlets are welded together and prior to finishing, the assembly shall be subjected to a 15 psi air test for leakage. The maximum size and laying length of the welded-on branch outlet shall be recommended by the pipe manufacturer and acceptable to the Utility Owner for the field conditions and connecting pipe or valve.

D. Steel Casing Pipe

1. All materials, design, fabrication, handling, and testing of steel casing pipe shall conform to the requirements of ASTM A139, AWWA C200 and AWWA Manual M11 "Steel Pipe – A Guide for Design and Installation."
2. Steel casing pipe shall be new, smooth-wall, carbon steel pipe conforming to ASTM Specification A139, Grade B with minimum yield strength of 35,000 psi. Steel casings shall be used with the size, minimum thickness, length, and coating specified on the Plans.
3. Additional anti-corrosion measures, as specified by the manufacturer or indicated on the Plans, shall be provided at connectors, couplings, rollers, restraints, etc.
4. Unless specified otherwise in the Plans, casing pipe end seals shall consist of ⅛-inch (6 mm) thick flexible synthetic rubber boot with adjustable stainless steel banding straps. The annular space of the casing shall not be filled with concrete or grout.
5. Casing spacers shall consist of a stainless steel shell, PVC ribbed liner, and non-conducting separators to keep the carrier pipe from touching the casing pipe. Spacers shall be provided at a maximum of 10-foot intervals and within 2 feet (0.6 m) of the end of the casing pipe.

E. Pipe Detection Wire

1. Unless otherwise specified in the Plans or the MWA Standards for Design and Construction Specifications – Article II, Section 2.04 B(3), open cut installations of non-metallic pipe shall include minimum #12 gauge tracing wire. Pipe installed by directional drill shall include two (2) insulated 8 gauge tracer wire. Wire shall be solid copper insulated with HDPE installed along pipe, wrapped around service line stub outs and stubbed into valve boxes for locating purposes. Wire shall be properly spliced to provide continuous conductivity.

F. Warning Tape

1. Sanitary sewer mains shall be installed with polyethylene film warning tape manufactured for marking and identifying underground wastewater utilities. Tape shall be a minimum of 2 inches (50 mm) wide and 4 mils thick, green in color, with continuously printed letters reading "CAUTION BURIED SEWER LINE BELOW".

G. Manholes

1. Manholes shall be precast concrete or as indicated in the Plans and per the MWA Standards for Design and Construction Specifications – Article II, Section 2.04 G
2. The minimum diameter for manholes shall be 48 inches (1200 mm). The minimum diameter for inside drop manholes shall be 60 inches 1500 mm). Manhole Types and Classes are described in Section 668.
3. Precast reinforced manholes shall be manufactured in accordance with ASTM C478 and shall have a minimum wall thickness of 5 inches (127 mm). All concrete shall have a minimum compressive strength of 4,000 psi when tested in accordance with ASTM C478.
4. The bases shall be monolithically cast and shall consist of a manhole bottom and a wall which shall extend a minimum of 6 inches (150 mm) above the top of the highest in-flowing sewer. The top of the base section shall be tongue and groove section.
5. There shall be a minimum distance of 6 inches (150 mm) between the invert of the lowest out flowing sewer and floor of the precast base to provide for the construction of a formed invert and bench wall within the manhole. There shall be a minimum 0.05-foot drop between the inlet and outlet inverts. Inverts shall be constructed of 4,000 psi plant mix concrete. Bench shape and discharge of force mains into manholes shall conform to the requirements of the Georgia EPD Guidelines for Sewage Collection Systems.
6. Joints between precast sections shall be sealed by means of rubber O-ring gaskets or flexible butyl rubber sealant.
7. Manholes shall have factory applied coatings on the interior and exterior. Surface preparation and coating application shall comply with the manufacturer's recommendations.
8. Manhole sections shall be rejected if abused during shipping or placement and if pipe openings are not properly aligned.
9. A protective coating or lining for corrosion protection shall be applied to interior surfaces of new manholes and existing manholes that are to be adjusted or reconstructed and existing manholes that are being tied into, within the project limits. Coating varies per installation, as follows:

   A. Existing (Rehabilitated) Manhole: Liner shall be a high-build fiber-reinforced epoxy liner for concrete structures exposed to severe wastewater environments. Liner shall be applied in two coats. First coat shall be a surface skim coat with a minimum thickness of 1/16" to fill all voids. Top coat shall be a protective coat that is spray applied at a minimum thickness of 80 mils. Allowable products are TNEMEC MortarClad Series 218 / Perma-Glaze Series 436 FR; LaFarge SewperCoat; or an Engineer-approved equal.

   B. New Manhole: Liner shall be AGRU Sure Grip concrete protective liner made from either High-Density Polyethylene (HDPE) or Polypropylene Random Copolymer (PP-R) with a minimum thickness of 2 mm. The lining shall be repairable at any time during the life of the structure. Only AGRU certified fabricators may be used to custom fit the liner to the formwork. The interior surfaces to be protected shall include the walls, floor, ceiling, and pipe entries.

10. Pipe entry holes shall be either precast or cored. Connections between reinforced concrete manhole structures and sewer pipe shall be flexible connectors conforming to ASTM C 923 latest revision.
11. Frame and covers shall be cast or ductile iron and set in a bed of mortar on the top of the manhole and flush with finished grade. Covers shall be marked as indicated in the Utility Owner standard details.
12. Watertight manhole rings and covers are to be used if the manhole is located within the 100-year floodplain boundary or may be flooded by street runoff.
13. Riser adjusting rings shall be a minimum of 3 inches (80 mm) on cone sections. Manhole adjustment rings shall be sealed with a flexible rubber seal.
14. Drop manhole: Inside or outside drop inlets shall be provided into sanitary sewer manholes for incoming lines having inverts 2 feet (0.6 m) or more above the inverts of the manhole outlet lines. Drop pipes shall be the same size as the sewer that they serve. Openings in walls of precast concrete manholes for outside drop connections shall not be made at joints. Outside drop piping materials and encasement/embedment shall be as indicated in the Plans. Concrete used to encase the outside drop piping shall be 4,000 psi plant mix concrete unless otherwise indicated on the Plans.
15. Manholes located in the roadway require a double-stack ring in accordance with the GDOT Utility Accommodation Manual.

660.2.02 Delivery, Storage, and Handling

A. Handle pipe, fittings, valves, and accessories carefully to prevent damage. Handle pipe by rolling on skids, forklift, or front end loader. Do not use material damaged in handling. Slings, hooks, or pipe tongs shall be padded and used in such a manner as to prevent damage to the exterior coatings or internal lining of the pipe. Do not use chains in handling pipe, fittings, and appurtenances.

B. To unload pipe, carefully lift and lower it into position using approved padded slings, hooks, or clamps. Furnish equipment and facilities for unloading, handling, distributing, and storing pipe, fittings, valves, and accessories. Make equipment available at all times for use in unloading. Do not roll, drop or dump materials. Any materials dropped or dumped shall be subject to rejection without additional justification.

C. Stored materials including salvaged materials shall be kept in suitable areas safe from damage. The interior of all pipe, fittings, and other appurtenances shall be kept free from dirt or foreign matter at all times. Store and support plastic pipe to prevent sagging and bending. Store plastic pipe and gaskets to prevent exposure to direct sunlight. Valves shall be stored and protected from damage by freezing.

D. Pipe shall not be stacked higher than the limits recommended by the manufacturer. The bottom tier shall be kept off the ground on timbers, rails, or concrete.

660.3 Construction Requirements

660.3.01 Personnel

A. General Provisions 101 through 150.

B. Construction and installation of all wastewater utilities shall be performed by a Contractor prequalified/registered with GDOT.

C. All work specified in this section shall be performed by a Contractor with a valid Utility Contractor's license issued by the State of Georgia. Sewer service line installation shall be performed by either a Utility Contractor licensed in the State of Georgia or by a Master Plumber licensed in the State of Georgia.

660.3.02 Equipment

A. Ensure all equipment used is in conformance with the requirements and standards set forth in the MWA Standards for Design and Construction Specifications.

660.3.03 Preparation

General Provisions 101 through 150.

660.3.04 Fabrication

General Provisions 101 through 150.

660.3.05 Construction

A. Finding Existing Underground Utilities and Obstructions

1. In accordance with Georgia Law, the Contractor shall call the Utility Protection Center, 811, to request utilities to be marked for all areas where construction activities are conducted.
2. Comply with Subsection 107.13 and Subsection 107.21.
3. According to the best information available to GDOT, all known sewer lines, water lines, gas lines, telephone conduits, drainage structures, etc. are shown on the Plans. However, to find such installations, use an electronic pipe and cable finder for locating existing installations or obstructions to the work.
4. Obtain approval from GDOT Project Manager and the Utility Owner prior to disruption of wastewater services required for the installation of the facilities shown on the project Plans.

B. Jack and Bore

Comply with Section 615 for sewer main installations by jack and bore.

C. Directional Drilling

1. Install sewer mains and services by means of directional drilling at locations shown on the Plans or where approved by GDOT or Utility Owner. Provide submittals and follow all relevant procedures and requirements set forth in the MWA Standards for Design and Construction Specifications – Article II, Section 2.19
2. The Contractor shall not initiate horizontal directional drilling until all submittals are received, reviewed, and accepted by GDOT and the Utility Owner, and all required permits are obtained.
3. The Contractor shall select drilling additives and fluid mixture proportions to ensure continuous circulation, bore stability, reduce drag on the pipe, and completely fill the annular space between the bore and the pipe to ensure stability and control settlement.
4. The Contractor shall submit contingency plans for remediation of potential problems that may be encountered during the drilling operations. The contingency plans shall address the observations that would lead to the discovery of the problem and the methods that would be used to mitigate the problem. Potential problems that shall be addressed include:
    a. Loss of returns/loss of circulation of drilling fluid.
    b. Encountering obstruction during pilot bore or reaming/pullback.
    c. Drill pipe or product pipe cannot be advanced.
    d. Deviations from design line and grade exceed allowable tolerances.
    e. Drill pipe or product pipe broken off in borehole.
    f. Product pipe collapse or excessive deformation occurs
    g. Utility strike.
    h. Hydrolock occurs or is suspected.
    i. Excessive ground settlement or heave of ground surface or existing utilities.
    j. Inadvertent returns/hydrofracture or surface spills resulting in drilling fluids entering water or reaching the surface.

5. Pipe damaged in directional drilling operations shall be removed and replaced at no additional expense to GDOT or the Utility Owner.
6. Voids developed or encountered during the installation operation shall be pressure grouted with a grout mix approved by GDOT.
7. Installation shall include a locatable conduit system, with identification markers on each side of GDOT right-of-way where applicable. Two (2) insulated 8 gauge solid copper tracers wire shall be attached to the leading end of the pipe pulling head and shall extend the full length of the installed pipe.
8. The location and alignment of the pilot drill progress shall be continuously monitored for compliance with the proposed installation alignment and for verification of the depth of the bore. Monitoring shall be accomplished by computer generated bore logs which map the bore path based on x, y, z coordinate information provided by the locating/tracking system. Readings or plots shall be obtained on every drill rod, and shall be provided to the Inspector on a daily basis. Deviations between the recorded and design bore path shall be calculated and reported on the daily log. If the deviations exceed tolerances specified elsewhere, such occurrences shall be reported immediately to GDOT. The Contractor shall undertake all necessary measures to correct deviations and return to design line and grade.
9. Upon completion of the directional drill the Contractor shall furnish GDOT and the Utility Owner an as-built drawing along with a report of the monitoring of the drilling fluids during the pilot hole and back reamed hole.
10. Drilling fluid pressures, flow rates, viscosity, and density shall be monitored and recorded by the Contractor. The pressures shall be monitored at the pump. These measurements shall be included in daily logs submitted to GDOT. The Contractor shall document modifications to the drilling fluids, by noting the types and quantities of drilling fluid additives and the dates and times when introduced. The reason for the addition of drilling fluid additives or other modifications shall be documented and reported.
11. Management and disposal of drilling fluids shall be the Contractor's responsibility. Excess drilling fluids shall be contained at the entry and exit points until recycled or removed from the site. All drilling fluids shall be disposed of in a manner acceptable to the appropriate local, state and federal regulations. The Contractor's work will be immediately suspended by GDOT whenever drilling fluids seep to the surface other than in the boring entrance or exit pit, or when a paved surface is displaced.
12. Surfaces damaged by the work shall be restored to their preconstruction conditions at no additional cost to GDOT or Utility Owner, and with no increase in contract time.
13. The following items shall be as shown on the Plans, unless otherwise approved in writing by GDOT:
    a. Entry / exit points
    b. Drill entry / exit angles
    c. Pilot bore path
        1) Radius of Curvature
        2) Entry / exit tolerances: Contractor shall be solely responsible for all work necessary to correct excessive deviations from line and grade, including re-drilling, redesigning connections, and acquiring additional easement, at no additional cost to GDOT or Utility Owner and without schedule extension.
14. The pilot bore shall be pre-reamed and reamed using equipment and methods submitted by the Contractor. The Contractor shall completely ream the bore to the final diameter prior to pullback.
15. Pullback: The pipe shall be installed by pulling it into the reamed bore path in a continuous operation, behind a final reaming tool selected by the Contractor. The pipe shall be isolated from excessive torsional and axial stresses by a swivel device with a pre-established breakaway tensile capacity that is lower than the allowable tensile strength of the pipe. The maximum pull (axial tension force) exerted on the pipelines shall be measured continuously and limited to the maximum allowed by the pipe manufacturer with an appropriate factor of safety so that the pipe or joints are not overstressed. The end of the pipe shall be closed during the pull back operation.

16. Pipelines shall be adequately supported during installation so as to prevent overstressing or buckling. The Contractor shall provide adequate support/rollers along the pipe layout area to support the required length of pipe for the bore. The pipe layout area shall be cleared of all large stones, construction debris, or other foreign objects that could damage the pipe during pullback. The Contractor shall monitor and inspect pipe rollers and method for suspending pipe at entry during the pullback operation to avoid damage to the pipe.
17. The end of the pipe shall be closed during the pull back operation.
18. Each length of pipe shall be inspected and cleaned as necessary to be free of debris immediately before joining.
19. The Contractor shall at all times handle the pipe in a manner that does not overstress or otherwise damage the pipe. Vertical and horizontal curves shall be limited so that wall stresses do not exceed 50% of yield stress for flexural bending of the pipe. If the pipe is buckled or otherwise damaged, the damaged section shall be removed and replaced by the Contractor at his expense. The Contractor shall take appropriate steps during pullback to ensure that the pipe and tracer wires will be installed without damage.
20. If necessary, the pipe shall have water added as it enters the bore to achieve neutral buoyancy and reduce pullback loads and to ensure that adequate internal pressure is maintained at all points to counter balance collapse pressures.
21. The Contractor shall cease pullback operations if the pipe is damaged and shall remove the pipe from the bore and repair the pipe using the manufacturer's recommended procedure or replace the damaged pipe before resuming installation.
22. Damage to the pipe resulting from manufacturer defects, installation, or grouting is the responsibility of the Contractor, including costs for replacement and labor and materials. To confirm no damage to the pipe, upon completion of pull back, the Contractor shall pull a sphere or pig through the entire length of the pipeline. The pig shall be one inch less in diameter than the internal diameter of the product pipe, capable of allowing water to pass through it, complete with a pulling cable on either side. If the pig or sphere cannot pass through the pipe, it shall be considered collapsed and damaged.
23. After the carrier pipe is completely pulled through the bore, a sufficient relaxation period as recommended by the pipe manufacturer shall be provided before the final pipe tie-in.
24. The Contractor shall conduct a final hydrostatic test of the installed pipeline. Final test shall be in accordance with these specifications. The Contractor shall repair any defects discovered during this test, and repeat until the pipe passes the test.

D. Excavating Trenches

1. The Contractor shall provide all necessary shoring and bracing materials as required to assure safe working conditions and to protect the excavations. The Contractor shall be required to fully comply with all applicable OSHA Excavation Safety Standards. No separate payment shall be made for any special procedure used in connection with the excavation.
2. Excavate trenches to the proper depth and width as follows:
    a. Trench to Grade: Excavated trench bottoms shall be firm, free from boulders, and conform to the established grade. Limit open trench excavation to a maximum of three 300 feet (90 m) ahead of completed backfill.
    b. Care shall be taken not to over excavate except where necessary to remove unstable material, irregularities, lumps, rock, and projections. Unnecessary over excavation shall be replaced at the Contractor's sole expense and in accordance with Subsection 660.3.05.
    c. Excavation carried below the established grade lines shown or established by the Utility Owner shall be backfilled according to Section 207 and Subsection 660.3.05. Use Class I or Class II Soils (defined in Section 810) and firmly compact the soil.
    d. Where the established grade of a trench is in rock, undercut the bottom of the trench by at least 6 inches (150 mm) beneath the pipe or conduit and the greater of 24 inches (600 mm) wider than the pipe/conduit (12 inches

or 300 mm each side) or 42 inches (1050 mm) wide, then backfill and compact according to Subsection 660.3.05.

e. Open cut excavation in pavement and pavement patching shall be according to GA Standard No. 1401. Remove the pavement according to Section 444, except no separate payment shall be made for sawed joints.

f. Dewatering: Remove all water from excavations and maintain the excavations free of water while construction therein is in progress. Provide dewatering equipment as necessary to conform to this requirement. Dewatering procedures must meet all state and local regulatory requirements.

3. Minimum Trench Depth

a. Excavate trenches to provide at least 48 inches (1.2 m) cover depth directly above the pipe to the finished pavement surface, sidewalk, grass, etc. unless indicated otherwise on the Plans or by GDOT Project Manager and Utility Owner. In order to avoid existing utilities, it may be necessary for the pipe to be laid shallower or deeper than the minimum cover specified. At such time the Contractor shall not be allowed extra compensation for additional excavation necessary for deeper installations.

b. Side slopes of the trenches shall be as nearly vertical as practicable. Trenches in excess of 5 feet (1.5 m) deep shall either have the trench sides laid back to conform to OSHA requirements for trench safety, if such area is available within the limits of excavation, or, alternatively, trenches deeper than 5 feet (1.5 m) shall be excavated via trench box or shored and braced.

4. Trench Width: Excavate trenches to uniform widths, wide enough to allow proper installation of pipe, fittings, and other materials, a minimum of 6 inches (150 mm) and a maximum of 12 inches (300 mm) each side of the pipe or conduit.

5. Trench Bell Holes: Excavate bell holes deeply and widely enough to make joints and to allow the pipe barrel to rest firmly on the trench bottom.

6. Trench bottom: Excavate and shape trench bottoms to provide uniform bearing and support of pipes and conduits. Shape subgrade to provide continuous support of bells, joints, and barrels of pipes and for joints, fittings, and bodies of conduits/pipes. Remove projecting stones, tree roots, debris, and sharp objects along trench subgrade. Abrupt changes in grade of the trench bottom shall be avoided. Unless otherwise indicated in the Plans, trenches for force mains shall be graded to avoid high and low points that necessitate air release valves.

7. Excavations may be excavated and refilled either by hand or by machinery. Hand tool excavation shall be conducted where necessary to protect existing utilities and structures.

8. In the event that unsuitable material is encountered at or below the excavation depth specified or shown on the Plans, GDOT Project Manager shall be notified immediately before proceeding with any additional work. Such material shall be removed and replaced with suitable material in accordance with Section 205.

E. Connecting to Existing Mains

1. Connect to an existing main with the appropriate fittings according to the Plans and GDOT Project Manager. When making connections under pressure, furnish and use a tapping sleeve and valve assembly or line stop fittings as indicated. Coordinate with Utility Owner 72 hours in advance for wastewater service interruptions and temporary shut-offs. Evening or weekend work may be required to complete direct connections and tie-ins. Connect to existing mains as follows:

a. Before opening new pipeline trenches, locate the various points of connection to be made into existing pipelines. If necessary, uncover pipelines for the Utility Owner and GDOT Project Manager to prescribe the connections and fittings needed.

b. Provide temporary line stops, associated fittings, and bypass pumping as indicated on the Plans and as necessary when cutting and plugging existing sewer mains to prevent service interruptions.

F. Laying Sewer Mains and Appurtenances

1. Preparing and Handling Pipes

a. Thoroughly clean the pipe and fittings before laying them. Keep them clean until accepted.

b. Use suitable tools and equipment. Do not damage the pipe, especially the lining inside the pipe.

c. Cut pipe in a manner to avoid damage to pipe or lining, leaving a smooth end at right angles to pipe axis. Smooth and bevel edges of cut pipe for push-on, gasket type joints.

d. Bedding shall be provided as specified by the project plans or pipe manufacturer for the type of conditions encountered. Bedding typically consists of granular soil free of lumps, clods, cobbles, and frozen materials, and shall be graded to a firm-but-yielding surface without abrupt changes in bearing value. Unstable soils and rock ledges shall be undercut from the bedding zone and replaced with suitable material.

e. Bed pipe on coarse granular material in flat bottom trench with entire pipe barrel bearing uniformly on coarse granular material, except for an approximately 18-inch (450 mm) gap at pipe balance point for sling removal. Hand excavate and backfill as required to provide uniform and continuous bearing and support for the pipe. Do not support pipe on hubs or end bells. Consolidate coarse granular material under and around pipe up to pipe centerline by tamping.

f. Join pipe with bells facing direction in which laying operation is progressing. Lay pipe upgrade wherever line grade exceeds 10%.

g. Carefully examine pipe for cracks and other defects and do not lay defective pipe. If pipe or castings appear to be cracked, broken, or defective after laying, remove and replace those sections.

2. Alignment and Gradient

a. Ensure that pipe alignment and gradient are according to the lines and grades on the Plans. Pressure pipe alignment shall be either straight or deflected to closely follow true curves. Deflect pipe lines only where required, within allowable horizontal and vertical deflection angles according to the manufacturer.

b. Sewers shall be laid at least 10 feet (3 m) horizontally from any existing or proposed water main. The distance shall be measured edge-to-edge. When local conditions prevent a horizontal separation of 10 feet (3 m), the sewer may, on a case-by-case basis, be laid closer to a water main provided the water main is in a separate trench or on an undisturbed earth shelf located on one side of the sewer at such an elevation that the bottom of the water main is at least 18 inches (450 mm) above the top of the sewer.

c. Maintain a vertical separation of at least 18 inches (450 mm) between the crown of sanitary sewers and the invert of existing or proposed water mains with the sewer main located below the water main.

d. Where a vertical separation of 18 inches (450 mm) cannot be provided, and the sewer main cannot be relocated to provide adequate clearance, the section of sewer main passing over or under water mains shall be constructed of materials and with joints that are equivalent to water main standards of construction and in accordance with Section 670, or the sewer line shall be encased in a watertight carrier pipe in accordance with Section 670, extending 10 feet (3 m) on both sides of the crossing measured perpendicular to the water main and shall be pressure tested to assure water-tightness to 150 psi prior to backfilling.

3. Special Requirements for Laying Sewer Mains

a. Excavate, clean, lay, joint, and backfill progressively and uniformly according to these requirements:

1) Never leave pipe in the trench overnight without completely jointing and capping.
2) Do not leave completed pipeline exposed in the trench. Backfill and compact the trench as soon as possible after laying, jointing, and testing are complete.
3) At the close of work each day and when laying pipe, close the exposed end of the pipeline in the trench with an approved wood or metal head or barrier.
4) If necessary to cover the end of an incomplete pipeline with backfill, close the end of the pipe with a satisfactory cap or plug.

G. Installing Sewer Mains by Open Cut

1. Use the following flexible joints for connections inside the roadway shoulders or curbs and gutters:

a. Mechanical Joints
   1) When using mechanical joints, thoroughly wash bell sockets, spigots, gland, gasket, nuts, and bolts with soapy water before assembly. Keep these parts wet until the jointing operation is complete.
   2) Tighten nuts within the torque range recommended by the manufacturer. Check the tightening tolerance with a torque wrench.
   3) If effective sealing is not attained at the maximum recommended torque, disassemble, thoroughly clean, and then reassemble the joint.
   4) Do not overstress bolts to compensate for improper installation or defective parts.

b. Push-On Type Joints
   1) Use push-on joints made according to the manufacturer's recommendations.
   2) Install PVC pipe in accordance with AWWA C605.
   3) Install ductile iron pipe in accordance with AWWA C600.

2. Restraints for pipe joints and fittings shall be provided as specified and as shown on the Plans. Restraints shall be installed per manufacturer's recommendations.
3. Buried ductile iron pipe and fittings which cross gas mains shall be polyethylene encased as specified and/or as indicated on the Plans. Polyethylene encasement tubing shall be secured with polyethylene tape and installed in accordance with ANSI/AWWA C105/A21.5.
4. Use pipe cutters when cutting pipe or special castings. Do not use a hammer, chisel, or a cutting torch.
5. Backfilling
   a. Furnish equipment, labor, and when necessary, suitable material to conform with the MWA Standards for Design and Construction Specifications –Article II, Section 2.10 required for backfilling the pipe line trenches according to Section 207, and as follows:
      1) When testing for leaks in open trenches, do not backfill until testing is complete and leaks are eliminated.
      2) When retaining pavement adjacent to trenches, replace removed pavement with the same or better material when approved in accordance with the appropriate Section for the pavement type replaced.
      3) Place backfill on subgrades free of mud, frost, snow, or ice.
      4) Place and compact bedding course on trench bottoms and where indicated. Shape the bedding course to provide continuous support for bells, joints, and barrels of pipes and for joints, fittings, and bodies of conduits/pipes.
      5) Backfill shall include Class I or Class II Soils as defined in Section 810 or suitable material that conforms with the MWA Standards for Design and Construction Specifications –Article II, Table2.10-1
      6) Backfill shall be placed in two stages: first, side fill to a height of 12 inches (300 mm) above the top of pipe; second, overfill to former surface grade. Side fill shall consist of granular material laid in 6-inch (150 mm) layers each consolidated by mechanical tamping and controlled addition of moisture, to a density of 95% as determined by the Standard Proctor test (AASHTO T-99 Method D) or GDT 67. Overfill shall be layered and consolidated to match the entrenched material in cohesion and compaction. The top 12 inches (300 mm) shall be compacted to 100% of specified density. Consolidation by saturation or ponding shall not be permitted.
      7) Soil Moisture Control: Uniformly moisten and aerate subgrade and each subsequent fill or backfill soil layer before compaction to within 2% of optimum moisture content. Remove and replace, or scarify and air dry, otherwise satisfactory soil material that exceeds optimum moisture content by 2% and is too wet to compact to specified dry unit weight.
      8) Initial backfill shall be carefully compacted under pipe haunches and evenly up on both sides and along the full length of piping or conduit to avoid damage or displacement of piping or conduit. Place and compact fill

and backfill of satisfactory soil to final subgrade elevation. Backfill voids with satisfactory soil while removing shoring and bracing and/or trench boxes.

9) After backfilling, maintain temporary surface restoration per GA Standard No. 1401 until permanent repaving is complete. No separate payment shall be made for replaced pavement.

H. Installation of Manholes

1. Each manhole location within the trench shall be over excavated to receive a minimum of 8 inches (200 mm) of No. 57 stone to establish a firm foundation for the manhole. Where the excavation reveals an unsuitable foundation, whether rock or muck, the Contractor shall remove unsuitable material and install No. 57 stone in 6-inch (150 mm) lifts to a maximum of 2 feet (0.6 m) as a foundation for the structure.
2. All manholes shall be installed plumb.
3. Horizontal joint sealant protruding into the manhole shall be cut smooth against the interior wall. Interior joints shall not be grouted unless otherwise directed.
4. Exterior wrap shall be installed centered over joints between manhole sections. Exterior manhole wall shall be clean prior to installing wrap.
5. Backfill adjacent to manholes shall be mechanically compacted in 12-inch (300 mm) lifts symmetrically around the perimeter of the manhole up to the frame and cover, and in accordance with Subsection 660.3.05.
6. Manholes shall be set flush with finished pavement grades where located beneath roadways, sidewalks, or other paved surfaces.
7. All lifting holes or equipment mounting holes shall be filled in completely and made watertight per manufacturer's recommendations.
8. Apply protective liner as described in 660.2.01G.

I. Connections to Existing Manholes

1. Whenever new sewers are connected to existing manholes, pipe openings shall be core drilled with approved equipment to accommodate new pipe. Such connections to existing manholes shall be installed in accordance with manufacturer's recommendations for neoprene boot, link seal or equal. All cuts shall be coated with an appropriate protective coating.
2. The bottom of the manhole shall be reworked and shaped to accommodate the new connections.
3. Apply protective liner as described in 660.2.01G.

J. Laying Sewer Laterals and Appurtenances

1. Except as modified in this Section, construct and install sewer laterals according to the Plans and the requirements for laying sewer mains. Install service lines at locations shown on the Plans or where designated by the Utility Owner and GDOT Project Coordinators.
2. Trench depth and backfill cover may be adjusted at the discretion of the Utility Owner and GDOT Project Coordinators to provide at least 18 inches (450 mm) of cover.
3. Install wyes or tees in the locations shown on the Plans for connection of existing or future service lines. Install laterals with proper grade and alignment to the property line shown on the Plans.
4. New laterals shall extend from the sewer main to the edge of the right-of-way (no more than 5 feet (1.5 m) from the edge of the right-of-way line) where they shall be plugged using a stopper of appropriate size. Sewer laterals shall be tapped into sewer trunk lines using the appropriate tapping machine.
5. Laterals shall be bedded and backfilled in accordance with bedding requirements shown on the Plans and specified herein.
6. Lateral connections shall not be made by knocking a hole in the main or manhole, inserting the lateral pipe, and sealing with grout.

7. Unless otherwise indicated in the Plans, sewer laterals shall be a minimum of 4 inches in diameter for residential services. Commercial, industrial, institutional, and other non-residential services shall match the existing size and shall extend from the main and terminate with a clean-out constructed at the edge of right-of-way.

K. Cutting and Capping Existing Sewer Mains

1. Disconnect by sawing or cutting and removing a segment of existing pipe where cutting and capping or plugging is shown on the Plans or directed by the Authority or GDOT Project Coordinators. Provide a watertight pipe cap or plug and restraint mechanism to seal off existing mains indicated to remain in service. If sewer main is to be abandoned or removed and not specified to be grout filled, seal ends with a pipe cap or plug or with a masonry plug and minimum 6-inch (150 mm) cover of concrete on all sides around the end of the pipe or wherever sewer pipe is severed either accidentally, or intentionally for construction purposes to avoid a conflict with other construction items.
2. The Contractor shall be responsible for uncovering and verifying the size and material of the existing main to be capped or plugged.
3. Sewer mains larger than 6 inches (150 mm) shall be removed or filled with flowable fill per Section 600 at the locations indicated on the Plans.
4. Sewer mains shall be cleaned prior to placement of flowable fill. Use concrete or grout pumps capable of continuous delivery at planned placement rate with sufficient pressure to overcome friction and fill the sewer main.

L. Abandon Existing Manhole

1. The manhole shall be cleaned and grout filled with to an elevation 18 inches above the crown of the highest entry pipe. The remained shall be filled with #57 or select backfill material as approved by the engineer. All pipes entering the manhole shall be plugged or grout filled. The top portion of the manhole structure shall be removed in order to establish a minimum of 4 feet cover from subgrade or finished grade when not under the pavement.

M. Relocating, Adjusting, and Removing

1. Lift Stations
   a. Demolish and install new lift station (if required) as indicated on the Plans. Refer to Special Provision 610.
2. Manholes
   a. Frames and covers shall be removed and manhole shall be adjusted to grade. Adjustment shall be made by adding or removing brickwork, concrete, riser rings, or other materials in accordance with the Plans.
   b. Within roadways, manholes shall be brought to final grade prior to paving. A minimum area of 12 inches (300 mm) wide (from edge of manhole ring) and a minimum of 12 inches deep shall be excavated around the adjusted frame and cover prior to final paving. The excavated area shall be brought to the grade of the roadway base material with a minimum of 3,000 psi concrete in preparation of final paving.
   c. Apply protective liner as described in 660.2.01G.
3. Remove Manholes
   a. Manholes which must be removed to avoid conflict with other construction shall be demolished, either in whole or in part. Portions of the manhole which remains in place shall be abandoned as defined in the paragraph for Abandon Existing Manhole.
4. Utility related items identified on the Plans to be salvaged are the property of the Utility Owner. Contractor shall coordinate with Utility Owner on delivery of salvaged materials. Should the Utility Owner choose to not accept these materials they shall be removed from the project site as soon as practical.
5. Remove Sanitary Sewer Pipe
   a. Completely remove contents of the sanitary sewer pipe as required by the State Department of Health and local authorities.

b. Remove and dispose of sanitary sewer pipe off-site. Backfill trenches and other excavations dug for removing sanitary sewer pipe in accordance with Section 610 Sub-Section 610.3.05 G. Backfilling.

N. Bypass Pumping

1. The Contractor shall provide for continuous transmission of all flows in the sewer system by providing for temporary bypass pumping where necessary to accommodate construction activities.
2. All flow shall be pumped around segments or structures during the installation and testing of the new sewer, sewer connections/reconnections, and the replacement of manholes.
3. The bypassed flow shall be discharged into a manhole, on the downstream side of the construction area, thus bypassing the sewer segment(s) under construction.
4. The Contractor's requirements for providing temporary bypass pumping shall include, as a minimum:
   a. Sizing and installing the piping, pumps, valves, and control system.
   b. If applicable, site preparation for placement of bypass pumping equipment.
   c. Providing and installing temporary suction and discharge piping and fittings.
   d. The Utility Owner has available information regarding actual pump run times for all system pump stations. It is the Contractor's responsibility to develop anticipated flow rates related to where temporary pump systems may be required for bypass pumping for sewers. The Contractor shall coordinate with the Utility Owner and obtain approval for the Contractor's proposed bypassing plan for any sewers. The Contractor shall have the capability to disconnect any bypass system and allow the existing conveyance system to accept flows at any time, particularly during wet-weather events.
   e. The Contractor shall ensure that an adequately sized back-up pump be available in the case of lead pump failure. The back-up pump shall be placed where if the primary pump fails, then back-up pumps can be put into use immediately. Back-up pumps shall provide automatic redundancy without requiring personnel starting or switchover.
   f. Providing power and/or fuel required to operate the system, including facilities to prevent spills. No power will be available from the Owner. Separate fuel tanks shall be used for the primary and back-up pumps.
   g. Personnel or automatic controls to adjust the flow rate of the pump system to match the influent flows.
   h. Connection to the Macon Water Authority SCADA system during the life of the temporary bypass pumping system.
   i. Removing all temporary pumping facilities when the work is completed.
5. The release of raw wastewater onto the ground or into a receiving stream is prohibited. The Contractor is responsible for paying all fines imposed for overflows or spills during construction.
6. The Contractor will be responsible for acquiring any necessary environmental, federal, state, local, and any other permits necessary for bypass pumping.
7. Bypass pumps shall be located in areas that do not disturb roadway traffic, nearby residences, places of work, or adjacent construction activities being performed by others. The Contractor is responsible for coordinating with the Utility Owner and GDOT Project Manager for the bypass pump location and operating hours.
8. Bypass pumps shall be sound attenuated with a maximum noise level of 72 dBA at nine meters. Bypass pumps shall be located a minimum of 50 feet from any residential structure.

O. **Abandon Sewer Mains**

1. Sewer mains larger than 6 inches (150 mm) shall be filled with flowable fill per Section 600 at the locations indicated on the Plans.

2. Use concrete or grout pumps capable of continuous delivery at planned placement rate with sufficient pressure to overcome friction and fill the sewer main. Clean sewer lines and video with closed circuit television to identify connections, locate obstructions, and assess condition of pipe. Locate previously unidentified connections, which have not been redirected and reconnected as part of this project, and report them to the MWA and the GDOT Project Manager. During placement of fill, compensate for irregularities in sewer pipe, such as obstructions, open joints, or broken pipe to

ensure no voids remain unfilled. Perform sanitary sewer demolition work prior to starting fill placement. Clean placement areas of sewers and manholes of debris that may hinder fill placement. Remove excessive amounts of sludge and other substances that may degrade performance of fill. Do not leave sludge or other debris in place. Remove free water prior to starting fill placement.

660.3.06 Quality Acceptance

O. Materials Certification

For certain products, assemblies and materials, in lieu of normal sampling and testing procedures by the Contractor, the GDOT, and Utility Owner may accept from the Contractor the manufacturer's certification with respect to the product involved under the conditions set forth in the following paragraphs:

1. Material certifications shall be provided to GDOT Project Manager, who shall distribute to the Utility Owner. Material certifications shall be approved by GDOT and the Utility Owner prior to construction. The certification shall state/specify that the named product conforms to these specifications and requirements of the Utility Owner and GDOT, and representative samples thereof have been sampled and tested as specified.
2. The certification shall either:
    a. Be accompanied by a certified copy of the test results, or on GDOT QPL list, or
    b. Certify such test results are on file with the manufacturer and will be furnished to the GDOT Project Manager and Utility Owner upon demand.
3. The certification shall state/specify the name and address of the manufacturer and the testing agency and the date of tests; and sets forth the means of identification which shall permit field determination of the product delivered to the project as being the product covered by the certification.
4. Submit certification with two copies of the covered product to the GDOT Project Manager, and Utility Owner.
5. GDOT or the Utility Owner will not be responsible for any costs of certification or for any costs of the sampling and testing of products in connection therewith.
6. GDOT and the Utility Owner reserve the right to require samples and test products for compliance with pertinent requirements irrespective of prior certification of the products by the manufacturer. Any materials that fail to meet specification requirements will be rejected.
7. In accordance with the BUY AMERICA requirements of the Federal regulations (23 U.S.C. 313 and 23 CFR 635.410) all manufacturing processes for steel and iron products or predominantly of steel or iron (at least 90% steel or iron content) furnished for permanent incorporation into the work on this project shall occur in the United States. The only exception to this requirement is the production of pig iron and the processing, pelletizing and reduction of iron ore, which may occur in another country. Other than these exceptions, all melting, rolling, extruding, machining, bending, grinding, drilling, coating, etc. must occur in the United States.
    a. Products of steel include, but are not limited to, such products as structural steel piles, reinforcing steel, structural plate, steel culverts, guardrail steel supports for signs, signals and luminaires, and cable wire/strand. Products of iron include, but are not limited to, such products as cast iron frames and grates and ductile iron pipe. Coatings include, but are not limited to, the applications of epoxy, galvanizing and paint. The coating material is not limited to this clause, only the application process.
    b. Records to be provided by the Contractor for this certification shall include a signed mill test report and a signed certification by each supplier, distributor, fabricator, and manufacturer that has handled the steel or iron product affirming that every process, including the application of a coating, performed on the steel or iron product has been carried out in the United States of America, except as allowed by this Section. The lack of these certifications will be justification for rejection of the steel and/or iron product or nonpayment of the work.
    c. The requirements of said law and regulations do not prevent the use of miscellaneous steel or iron components, subcomponents and hardware necessary to encase, assemble and construct the above products, manufactured products that are not predominantly steel or iron or a minimal use of foreign steel and iron materials if the cost

of such materials used does not exceed one-tenth of one percent (0.1%) of the total contract price or $2,500.00, whichever is greater.

P. Alignment Testing

1. Straight alignment of gravity sewers shall be checked by either using a laser beam or lamping. Each segment between manholes shall show at least 90% of the full pipe circle visible when looking from manhole to manhole.

Q. CCTV Inspection

1. All new gravity sewers shall be inspected via closed-circuit televising (CCTV) in accordance with the MWA Standards for Design and Construction Specifications –Article II, Section 2.22.
2. The Contractor shall thoroughly clean the entire sewer system by jetting or applicable methods prior to the TV inspection. If conditions indicate repairs are necessary, re-televising may be required. The initial inspection shall be scheduled with the Utility Owner and GDOT Project Manager when the Contractor advises that all sewer lines are ready for testing.
3. All TV inspections shall be performed by persons and/or firms qualified in such work. The Contractor shall provide the TV inspection deliverables according to the format indicated in the MWA Standards for Design and Construction Specifications –Article II Section 2.22.

R. Manhole Vacuum Testing

1. A vacuum test shall be performed on each manhole to assure water-tightness in accordance with ASTM C1244. The manholes shall be tested separately from sewer lines.
2. If the manhole fails the initial test, necessary repairs shall be made at the Contractor's expense and the manhole retested until a satisfactory test is obtained.

S. Deflection Testing

1. Utility Owner may require deflection tests utilizing a mandrel to be performed on flexible gravity sewer pipes. Deflection tests shall be conducted after the final backfill has been in place to permit stabilization of the soil-pipe system and follow the requirements of the MWA Standards for Design and Construction Specifications –Article II Section 2.22 B.

2. No mechanical pulling devices shall be used. All pipes not passing this mandrel shall be re-laid or replaced by the Contractor at no additional cost to GDOT or Utility Owner.

T. Leakage Testing

1. The Contractor shall conduct tests to determine the water-tightness of gravity sewers when completed. The Utility Owner shall observe the tests with the Contractor furnishing all required labor, equipment, and materials.
2. Sewers shall be tested in sections with each section extending between two adjacent manholes or from the end of the sewer to the nearest manhole. The Contractor shall utilize an infiltration test, an exfiltration test, or a low pressure air test at the direction of the Utility Owner and in accordance with the MWA Standards for Design and Construction Specifications –Article II Section 2.22 A(1)b.
    a. Infiltration: Each section shall be covered with no less than two feet (0.6 m) of water above the top of the pipe at the highest point. The infiltration will be measured by means of a weir located in the downstream manhole. The pressure head of 2 feet (0.6 m) shall be maintained for a period of not less than 24 hours before the weir measurements are made.
    b. Exfiltration: The sewer at the upstream side of the lower manhole and the upstream side of upper manhole in each section shall be closed with a watertight bulkhead and the sewer filled with water until the water elevation in the upstream manhole is not less than two feet (0.6 m) above the top of the sewer pipe or two feet (0.6 m) above ground water elevation in the trench, whichever is higher. The exfiltration will be determined by measuring the amount of water required to maintain the above stated water elevation for a period of one hour

from the start of the test. The entire length of section to be tested shall be filled and maintained full of water for a period of approximately 24 hours prior to the start of the test.

c. The amount of exfiltration or infiltration shall not exceed 50 gallons per inch of pipe diameter per 24 hours per mile of sewer in each and every section tested in accordance with the above.

d. In the event the allowable leakage rates are not met, the Contractor shall determine the location(s) where excess water is entering or leaving the sewer. The sewer and/or the manholes shall be repaired and retested until the leakage in the sewer is within the allowable limits.

3. Air test: Low pressure air testing shall be completed to detect leaks in sewers where hydrostatic testing is not practical. The Contractor shall perform the low pressure air test as specified in ASTM C924 for concrete and Uni-Bell UNI-B-6-98 for plastic pipe.

660.3.07 Contractor Warranty and Maintenance

General Provisions 101 through 150.

660.4 Measurement

Incidentals including excavation, rock removal, backfilling, flushing, testing, temporary water connections, pavement removal, pavement replacement, and other incidentals required for the installation of water distribution items are not measured for separate payment and shall be included in the applicable Pay Items below. Gravity sewer mains, manholes, force mains, and laterals, and associated items of work in this Specification, complete, in place, and accepted, are measured for payment as follows:

A. Sewer Main

Sewer mains shall be measured in linear feet (meters) for each size and thickness installed. Measurement shall be horizontally above the centerline of the pipe.

B. Manholes

Manholes shall be measured on an individual basis on the depth and type of manhole acceptably installed in accordance to Section 668.

C. Drop Manholes

Manholes shall be measured on an individual basis on the depth and type of manhole acceptably installed in accordance to Section 668.

D. Connection to Existing Manholes

Connection to existing manholes will not be measured separately. Connections to existing manholes shall be included in the Contract price for sewer main.

E. Steel Casing

Steel casing pipe of the wall thickness and diameter specified shall be measured by the linear foot for each size and thickness of steel casing pipe installed in accordance to Section 660 acceptably installed. Measurement shall be horizontally above the centerline of the casing.

F. Abandon Manhole

Abandon manhole shall be measured on an individual basis on the number of each acceptably abandoned in accordance with this Special Provision.

G. Removal of Manholes

Removal of existing manholes shall be measured on an individual basis on the number of each manhole removed in accordance to Section 660.3.05.M5. A and B.

H. Adjustment of Manholes

Adjustment of existing manholes adjusted to grade in their original locations shall be measured on an individual basis on the number of each manhole acceptably adjusted in accordance to Section 611.

I. Cut and Plug Sewer Main

Cutting and plugging of sewer mains will not be measured separately. Cutting and plugging sewer mains shall be included in the contract price for Flowable Fill.

J. Removal of Sewer Mains

Removal of sewer mains shall be measured in linear feet for each size actually removed in accordance to Section 610 and SP 660.3.05 M.5. Measurement shall be above the centerline of the pipe removed and shall include the length of valves, fittings, and cleanouts.

K. Flowable Fill

Flowable fill shall be measured as indicted in Section 600 per cubic yard of flowable fill acceptably installed. When flowable fill is not shown as a pay item, include the cost of the work in the bid price for the appropriate item.

L. Bypass Pumping

Bypass pumping will not be measured separately. Bypass pumping shall be included in the contract price for Sewer Main.

M. Closed Circuit Television (CCTV) Inspection

CCTV inspection will not be measured separately.

N. Abandon Sewer Mains will not be measured separately. Abandon sewer mains shall be included in the contract price for Flowable Fill.

O. Jack and Bore will not be measured separately. Jack and bore shall be included in the contract price for casing.

P. Directional Bore will not be measured separately. Directional bore shall be included in the contract price for casing.

Q. Spacers, straps, blocking, seals and all related appurtenances required to install sewer main in steel casing will not be measured separately. These items shall be included in the contract price for casing.

660.4.01 Limits

General Provisions 101 through 150.

660.5 Payment

The Contract Unit Price for each Item, complete and accepted, shall include all costs incidental to the construction of the item according to the Plans and as specified in this Section. The unit prices bid shall include due allowance for the salvage value of all materials removed from existing or temporary lines and not installed in the completed work. All such surplus items shall become the property of the Contractor unless such surplus items are specified to be salvaged. Payment for any item listed below is full compensation for the Item or Items complete in place.

A. PVC Gravity Main

PVC sewer mains shall be paid for at the unit price per linear foot for each diameter and thickness pipe installed and shall cover the cost for all materials, transportation, labor, equipment, excavation, sheeting and shoring, temporary bypass pumping, installation of pipe, joints and jointing materials, tracer wire, warning tape, protection of existing utilities, connections to existing mains, connection to existing manholes, cleanouts, adjustment of cleanouts, flushing, backfilling, backfill materials, disposal of unsuitable backfill material, clean backfill, tamping, testing, densities, utility crossings, dewatering, trench stabilization, clean-up, restoration, CCTV inspection, and all work and materials necessary to place the pipe into service.

B. Manholes

Sanitary sewer manholes shall be paid for at the unit price in accordance to Section 668 ,according to the depth and type of each manhole installed and shall cover the cost for all materials, transportation, labor, equipment, excavation, sheeting and shoring, installation of manholes including ring and covers, inverts, coatings, protection of existing utilities, backfill material, disposal of unsuitable backfill materials, clean fill, tamping, testing, densities, utility crossings, dewatering, trench stabilization, clean-up, restoration, and all work and materials necessary to install the manhole and place into service. Apply protective liner as described in 660.2.01G.

C. Drop Manholes

Sanitary sewer drop manholes shall be paid for at the unit price per each manhole installed in accordance to Section 668 and shall cover the cost for all materials, transportation, labor, equipment, excavation, sheeting and shoring, installation of manholes including ring and covers, inverts, coatings, outside drop piping and fittings, concrete encasement, protection of existing utilities, backfill material, disposal of unsuitable backfill materials, clean fill, tamping, testing, densities, utility crossings, dewatering, trench stabilization, clean-up, restoration, and all work and materials necessary to install the manhole and place into service. Apply protective liner as described in 660.2.01G.

D. Connections to Existing Manholes

Connections to existing manholes will not be paid for separately. Connections to existing manholes shall be paid for in the Contract Price for sewer main and shall cover the cost for all material, transportation, labor, equipment, excavation, sheeting and shoring, installation of manhole connection, rework of inverts, grout, coatings, protection of existing utilities, backfill material, disposal of unsuitable backfill materials, clean fill, tamping, testing, densities, utility crossings, dewatering, trench stabilization, clean-up, bypass pumping (as required), restoration, and all work and materials necessary to acceptably install the manhole connection. Apply protective liner as described in 660.2.01G.

E. Steel Casing

Steel casing pipe shall be paid for at the unit price per linear foot according to the diameter and thickness of the steel casing installed and shall cover the cost for all materials, transportation, labor, equipment, excavation, sheeting and shoring, protection of existing utilities, steel casing pipe, skid, steel straps, coatings, casing spacers, end seals, boring and jacking pits, backfilling, backfill materials, disposal of unsuitable backfill material, clean fill, tamping, testing, densities, dewatering, trench stabilization, clean-up, restoration, and all work and materials necessary to install the steel casing except where such items are shown to be paid for under a separate Item. The carrier pipe shall be paid for as a separate Pay Item.

F. Abandon Manhole

Abandonment of manholes shall be paid for at the unit price per each manhole abandoned and shall cover the cost for all materials, transportation, labor, equipment, excavation, sheet and shoring, protection of existing utilities, breaking up the foundation, placing filler material, backfilling, backfill material, disposal of unsuitable backfill materials, clean fill, tamping, testing, densities, dewatering, trench stabilization, clean-up, bypass pumping (as required), restoration, and all work necessary to abandon manholes in place.

G. Removal of Manhole

Removal of manholes shall be paid for in accordance with Section 610, at the unit price per each manhole removed and shall cover the cost for all materials, transportation, labor, equipment, excavation, sheet and shoring, protection of existing utilities, backfilling, backfill material, disposal of unsuitable backfill materials, clean fill, tamping, testing, densities, dewatering, trench stabilization, clean-up, bypass pumping (as required), restoration, and all work necessary to remove and dispose of manholes including ring and covers.

H. Adjustment of Existing Manhole

Manhole tops to be raised or lowered 2 feet (0.6 m) or less are considered adjustment of existing manholes, which shall be paid for in accordance with Section 611, at the unit price per each manhole adjusted to final grade and shall cover the cost of all materials, including new ring and covers for sanitary manholes, transportation, labor, equipment, plugs, riser sections, brick and mortar, adjustment rings, excavation, sheeting and shoring, backfilling, backfill material, disposal of unsuitable backfill materials, clean fill, tamping, testing, densities, dewatering, trench stabilization, clean-up, bypass pumping (as required), restoration, and all work and materials necessary to install the new ring and cover and adjust to final grade. Apply protective liner as described in 660.2.01G.

I. Cut and Plug Existing Sewer Main

Cutting and plugging of existing sewer mains will not be paid for separately. Cutting and plugging existing sewer main shall be included in the contract price for Flowable Fill and shall cover all materials, transportation, labor, equipment, excavation, sheeting and shoring, protection of existing utilities, backfilling, backfill material, disposal of unsuitable backfill materials, clean fill, tamping, testing, densities, dewatering, trench stabilization, clean-up, restoration, and all work and materials necessary to cut and plug existing sewer mains.

J. Removal of Sewer Mains

Removal of sewer mains shall be paid for in linear feet for each size actually removed in accordance to Section 610 and SP 660.3.05 M.5. and shall cover the cost for all materials, transportation, labor, equipment, excavation, sheeting and shoring, protection of existing utilities, backfilling, backfill material, disposal of unsuitable backfill materials, clean fill, tamping, testing, densities, dewatering, trench stabilization, clean-up, bypass pumping (as required), restoration, and all work and materials necessary to locate, remove and dispose of the pipe and associated appurtenances. Unless indicated for removal as a separate Pay Item, appurtenances to be removed shall include but not be limited to fittings, isolation valves, air release valves, valve boxes, steel casings, casing spacers, service laterals, thrust blocks, and concrete. All such surplus items shall become the property of the Contractor unless specified to be salvaged by the Utility Owner.

K. Flowable Fill

Flowable fill shall be paid for at the unit price per cubic yard of flowable fill installed as indicated in Section 600 and shall cover the cost for all materials, transportation, labor, equipment, excavation, sheeting and shoring, flushing, plugging air release valves and service connections, cutting and plugging abandoned mains and manholes, installation of flowable fill, protection of existing utilities, backfilling, backfill material, disposal of unsuitable backfill materials, clean fill, tamping, testing, densities, dewatering, trench stabilization, clean-up, restoration, and all work and materials necessary to complete the installation. When flowable fill is not shown as a pay item for the sewer items, include the cost of the work in the bid price for the appropriate item.

L. Bypass Pumping

Bypass pumping will not be paid for separately. Bypass pumping shall be included in the Contract price for sewer main. Work shall include determining system capacity requirements, temporary plugs, provisions for temporary reservoir storage, primary pump and backup pump, control system, connection to Macon Water Authority SCADA system, and all incidental costs.

M. Closed Circuit Television (CCTV) Inspection

CCTV will not be paid for separately. CCTV inspection shall be included in the Contract price for sewer main. Inspection acceptably performed shall cover the costs for all materials, transportation, labor, equipment, excavation, sheeting, shoring, bypass pumping, protection of existing utilities, CCTV inspection, CDs / DVDs, inspection reports, clean-up, restoration, and all work and materials necessary to perform the CCTV inspection.

N. Abandon Sewer Mains will not be paid for separately. Abandon sewer mains shall be included in the contract price for Flowable Fill.

O. Jack and Bore will not be paid for separately. Jack and bore shall be included in the contract price for casing.

P. Directional Bore will not be measured separately. Directional bore shall be included in the contract price for casing.

Q. Spacers, straps, blocking, seals and all related appurtenances required to install sewer main in steel casing will not be measured separately for payment but shall be included in the contract price for casing.

Payment will be made under:

Item No. 600	Flowable Fill	Per cubic yard
Item No. 610	Removable Sanitary Sewer Pipe, _____ In.	Per linear foot
Item No. 610	Remove Manhole	Per each
Item No. 611	Adjust Sanitary Sewer Manhole to Grade	Per each
Item No. 660	Sanitary Sewer Pipe, _____ in.	Per linear foot
Item No. 660	Steel Casing, _____ in., _____ WT	Per linear foot
Item No. 660	Abandon Manhole	Per each
Item No. 668	Sanitary Sewer Manhole, TP __	Per each
Item No. 668	Sanitary Sewer Manhole, TP __, Additional Depth, Class __	Per linear foot

660.5.01 Adjustments

General Provisions 101 through 150.

July 17, 2013
Revised May 16, 2014
Revised May 09, 2016
Revised July 7, 2016
Revised August 22, 2016
Revised April 12, 2017

DEPARTMENT OF TRANSPORTATION

STATE OF GEORGIA

SPECIAL PROVISION

PROJECT NO: STP00-3223-00(004), Bibb County

PI NO: 351090

Section 660—Sanitary Sewers

Delete Section 660 and substitute the following:

660.1 General Description

This Work consists of furnishing materials, labor, tools, equipment, and other items necessary for installing, removing, abandoning, relocating, and adjusting sanitary sewer and force main systems and appurtenances to the Plans and Specifications.

660.1.01 Definitions

A. General Provisions 101 through 150

B. Whenever the terms "MWA" or "Authority," are used in this Special Provision and its related documents, it shall be understood to mean the Macon Water Authority, its subsidiaries, successors and/or assigns, hereafter referred to as Utility Owner.

C. The term "Project Manager" shall mean the authorized individual having the authority to give instructions pertaining to the work and to approve or reject the work. The "Project Manager" shall not however be authorized to revoke, alter, enlarge, relax, or release any requirements of the Contract, Plans, and Specifications, nor shall they act as an agent for the Contractor. All Contract items pertaining to the Utility Owner shall be coordinated with the Georgia Department of Transportation's (GDOT) Project Manager and the Utility Owner.

660.1.02 Related References

A. Standard Specifications

Section 104—Scope of Work

Section 107—Legal Regulations and Responsibility to the Public

Section 108—Prosecution and Progress

Section 205—Roadway Excavation

Section 207—Excavation and Backfill for Minor Structures

Section 400—Hot Mix Asphaltic Concrete Construction

Section 444—Sawed Joints in Existing Pavements

Section 500—Concrete Structures

Section 600—Controlled Low Strength Flowable Fill

Section 615—Jack or Boring Pipe

Section 611—Relaying, Reconstructing, or Adjusting to Grade of Miscellaneous Roadway Structures

Section 668—Miscellaneous Drainage Structures

Section 800—Coarse Aggregate

Section 801—Fine Aggregate

Section 810—Roadway Materials

Section 812—Backfill Materials

B. Related Documents

1. General Provisions 101 through 150.
2. All products supplied and all work performed shall be in accordance with the MWA Standards for Design and Construction Specifications– Article II, applicable standards from American Society for Testing and Material (ASTM), American Water Works Association (AWWA), American National Standards Institute (ANSI), GDOT Utility Accommodation Policy and Standards, and the Georgia Environmental Protection Division (EPD) Guidelines for Sewage Collection Systems. Latest revisions of all standards shall apply.

660.1.03 Submittals

A. General Provisions 101 through 150.

B. Refer to the MWA Standards for Design and Construction Specifications– Article II, current published edition, for sanitary sewer utility submittal requirements. Copies of all submittals and documentation shall be submitted to GDOT, who shall distribute to the Utility Owner. Submittals will be approved by Macon Water Authority and the Authority's Engineer.

C. Shop Drawings / Product Data

1. Submit [4] copies of the following submittals to the GDOT Project Manager:
   a. Product data, including size, dimension, capacity, pressure rating, accessories, and special features, installation instructions, and operating characteristics for all proposed materials to show compliance with the requirements of this Special Provision.
   b. Test reports specified in the Quality Acceptance section of this Special Provision.
   c. Pipe manufacturer certification of compliance with specifications.
   d. Operation and maintenance literature, warranties, and other specified information.

D. Construction Record Documentation (Macon Water Authority Specification 01720)

1. SCOPE

a. The work under this Section includes, but is not necessarily limited to, the compiling, maintaining, recording and submitting of project record documents as herein specified.

b. Record documents include, but are not limited to:

i. Drawings;

ii. Specifications;

iii. Change orders and other modifications to the Contract;

iv. Engineer field orders or written instructions, including Requests for Information (RFI) and Clarification Memorandums;

v. Reviewed shop drawings, product data and samples;

vi. Test records.

c. The Contractor shall maintain on the Project site throughout the Contract Time an up to date set of Record Drawings.

2. MAINTENANCE OF DOCUMENTS AND SAMPLES

a. Storage

i. Store documents and samples in the Contractor's field office, apart from documents used for construction.

ii. Provide files and racks for storage of documents.

iii. Provide locked cabinet or secure storage space for storage of samples.

b. File documents and samples in accordance with format of this Special Provision.

c. Maintenance

i. Maintain documents in a clean, dry, legible condition and in good order.

ii. Do not use record documents for construction purposes.

iii. Maintain at the site for the MWA one copy of all record documents.

d. Make documents and samples available at all times for inspection by MWA Engineer.

e. Failure to maintain the Record Documents in a satisfactory manner may be cause for withholding of a certificate for payment.

3. QUALITY ASSURANCE

a. Unless noted otherwise, Record Drawings shall provide dimensions, distances and coordinates to the nearest 0.1 foot.

b. Unless noted otherwise, Record Drawings shall provide elevations to the nearest 0.01 foot for all pertinent items constructed by the Contractor.

c. The Contractor shall employ a currently registered professional engineer to prepare the Record Drawings from a post-construction, field run survey. The Record Drawings shall provide elevations to the nearest 0.01 foot for all manhole inverts, manhole frames and other pertinent items constructed by the Contractor. The Record Drawings shall show sanitary sewer size, material and lateral locations with sizes. The Record Drawings shall provide dimensions, distances, and coordinates to the nearest 0.01 foot and horizontal angles to the nearest 10 seconds.

4. RECORDING

a. Label each document "PROJECT RECORD" in neat, large printed letters.

b. Recording

i. Record information concurrently with construction progress.

ii. Do not conceal any work until required information is recorded.

5. RECORD DRAWINGS

a. Record Drawings shall be reproducible, shall have a title block indicating that the drawings are Record Drawings, the name of the company preparing the Record Drawings, and the date the Record Drawings were prepared. The Contractor will provide drawings submitted in either the (.dxf) or the (.dwg) version R13 or later on a non-rewritable (Read Only) CD, along with two (2) sets of plans in the same format as shown on the disk. The Record Drawings shall be submitted on a (24" x 36") sheet.

b. Legibly mark drawings to record actual construction, including:

i. All Construction

1. Changes of dimension and detail.

2. Changes made by Requests for Information (RFI), field order, clarification memorandums or by change order

3. Details not on original Drawings

ii. Site Improvements, Including Underground Utilities

1. Horizontal and vertical locations of all exposed and underground utilities and appurtenances, both new facilities constructed and those utilities encountered, referenced to permanent surface improvements.

2. Location of and dimensions of roadways and parking areas, providing dimensions to back of curb when present.

3. The locations shall be referenced to at least two easily identifiable, permanent landmarks (e.g., power poles, valve markers, etc.) or benchmarks.

4. The Record Drawings shall include the horizontal angle and distance between manhole covers.

iii. Structures

1. Depths of various elements of foundation in relation to finish first floor datum or top of wall.

2. Location of internal and buried utilities and appurtenances concealed in the construction, referenced to visible and accessible features of the structure.

6. SPECIFICATIONS

a. Legibly mark each section to record:

i. Manufacturer, trade name, catalog number, and supplier of each product and item of equipment actually installed.

ii. Changes made by Requests for Information (RFI), field order, clarification memorandums, or by change order.

7. SUBMITTAL

a. Within two (2) weeks of all contract utility components entering service, deliver two (2) sets of Record Documents to the MWA Engineer.

b. Within two (2) weeks of all contract utility components entering service, deliver one (1) set of Record Documents to the DOT Project Manager.

c. Accompany submittal with transmittal letter, in duplicate, containing:

i. Date

ii. Project title and number

iii. Contractor's name and address

iv. Title and number of each record document

v. Signature of Contractor or Contractor's authorized representative

vi. Name and address of firm preparing record document

vii. Stamp by a professional engineer

660.1.04 Quality Assurance

A. The Contractor shall comply with applicable codes, ordinances, rules, regulations and laws of local, municipal, state or federal authorities having jurisdiction over the Project.

B. Furnish manufactured items, pipe, fittings, valves, service components, and appurtenances from manufacturers having regularly produced such items as specified herein which have proven satisfactory in actual service, over at least a 2-year period, or as approved by the GDOT and Utility Owner.

C. Regardless of tolerances permitted by industry standards specified herein, GDOT Project Manager may reject pipe or appurtenances at the manufacturing plant or project site which have cracks, chips, blisters, rough interior or exterior surface, evidence of structural weakness, joint defects, or other imperfections that might in the opinion of the Project Coordinators contribute to reduced functional capability, accelerated deterioration or reduced structural strength.

D. The Utility Owner and the Utility Owner's consultant shall have the right to visit and inspect the work at any time. The Utility Owner may also have an Inspector assigned to the project authorized to inspect portions or all of the utility work done and the preparation, fabrication, or manufacture of the materials to be used. The Utility Owner shall be able to advise GDOT Project Manager of any observed discrepancies or potential problems. The cost of these inspections shall be the responsibility of the Utility Owner.

E. GDOT shall notify the Utility Owner before authorizing any changes or deviations which might affect the Utility Owner's facilities. Contractor shall notify GDOT and Utility Owner a minimum of 24 hours prior to beginning work on utilities.

F. The Utility Owner shall be notified by GDOT Project Manager when all utility work is complete and ready for final inspection. The Utility Owner shall be invited to attend the final inspection and may provide a corrections list to GDOT Project Manager prior to the final inspection.

G. The Contractor shall verify the actual location and depth of all utilities prior to construction. All utilities and structures shall be protected during construction. Any damaged facilities shall be repaired or replaced at the Contractor's expense.

660.2 Materials

A. All materials provided shall be in conformance with the requirements and standards set forth in the [Name of Utility specification document], current published edition.

660.2.01 Sanitary Sewer Piping Systems and Appurtenances

A. Reinforced Concrete Pipe

1. Reinforced concrete pipe for gravity sewer applications 36 inch to 48 inch diameter shall conform to the requirements of ASTM C76 for circular pipe, Wall B or greater, for the specified diameter and strength class. If no class is specified, Class III pipe will be used. The interior surface of the pipe shall be a smooth, cylindrical surface. Cement shall meet all the requirements of ASTM C150, Type 1. No lifting holes shall be allowed. The pipe will be furnished complete with gaskets, grout bands and lubricant as required for proper installation. Pipe shall be designed for a 0.01-inch crack D-Load. The ultimate D-Load shall be at least 1.5 times the 0.01-inch D-Load.
2. The interior of all reinforced concrete pipe shall be fully lined (360°) with a PVC liner. Acceptable manufacturers are Ameron T-Lok, Poly-Teet, Inc. or approved equal. The liner shall be installed by the pipe manufacturer prior to pipe delivery.
3. The liner shall be field welded at each joint after installation.
4. Joints in reinforced concrete pipe 36 inches in diameter and greater shall have trapped O-ring gaskets meeting the requirements of ASTM C443. When required, concrete pipe ends shall be manufactured with steel bell and spigot end rings with a groove on the spigot for an O-ring rubber gasket. This joint shall meet the joint requirements of ASTM C 443 and ASTM C 361. The shape, dimensions and tolerances of the bell and spigot or tongue and groove ends of the pipe shall be accurately manufactured so that, when adjacent pipe sections are drawn together, the rubber gasket shall be uniformly compressed around the periphery of the pipe to provide a watertight seal.

B. Polyvinyl Chloride (PVC) Pipe

1. Force Mains shall be C900 PVC pipe diameters 4-inch (100 mm) through 12-inch (300 mm) shall meet ANSI/AWWA C900 requirements, and shall be a minimum pipe dimension ratio (DR) 18, Pressure Class 235 psi. C905 PVC pipe diameters 14-inch (350 mm) and greater shall meet ANSI/AWWA C905 requirements and shall be DR 18 minimum, Pressure Class 235 psi. Pipe shall have a bell with an integral wall section with a factory 4 inch to 15 inch diameter PVC gravity sewer shall be integral bell and spigot joint pipe, and shall comply with ASTM D3034 for pipes 15-inch (380 mm) and smaller, with minimum standard dimension ratio (SDR) 26. Pipes 18-inch to 24-inch shall comply with ASTM F679 with the minimum standard dimension ration (SDR) 26. Joints shall be of the bell and spigot gasketed type in accordance with ASTM D3212 and ASTM F477. 24 inch PVC gravity sewer pipe shall meet ANSI/AWWA C905 requirements for DR 18 minimum, Pressure Class 235 PSI. Pipe shall have a bell with an integral wall section with a factory installed solid cross section elastomeric ring in accordance with ASTM F477.
2. All PVC pipe shall be formulated for sunlight exposure and shall be green in color to designate wastewater.
3. PVC pipe shall have the same outside diameter (OD) as ductile iron pipe and be compatible for use with ductile iron fittings.
4. Fittings for PVC pipe 4 inches (100 mm) and larger shall be ductile iron mechanical joint and comply with the requirements set forth in the specifications for Ductile Iron Pipe and Fittings.
5. Restrained Joints: Restrained joints shall be provided as shown on the Plans and where required for thrust restraint. Restrained joints shall comply with the requirements set forth in the specifications for Ductile Iron Pipe and Fittings, with assembly in conformance with AWWA C600 and manufacturer's recommendations.
6. Unless specified otherwise in the Plans, 2-inch (50 mm) and 3-inch (80 mm) diameter PVC pipe shall conform to the requirements of ASTM D2241 Class 1120 or 1220 (SDR 21) with a working pressure rating of 200 psi with integral bell gasketed joints. Pipe is to be manufactured to IPS standard pipe equivalent outside diameters.
7. Schedule 80 PVC pipes smaller than 4-inch (100 mm) nominal diameter shall be in accordance with ASTM D1785. Schedule 80 pipe shall have threaded joints. Solvent cemented joints shall not be used. Threaded type fittings for Schedule 80 PVC pipe shall be in conformance with ASTM D2464. All threaded joints shall be watertight.
8. Flanges for Schedule 80 PVC pipe shall be rated for a 150 psi working pressure with ANSI B16.1 dimensions and bolting pattern. Flanges shall be connected to PVC piping with threaded joints in accordance with ASTM D2467 or ASTM 2464, respectively.

C. Ductile Iron Pipe and Fittings

1. Ductile iron pipe shall meet the latest edition of ANSI/AWWA C150/A21.50 and C151/A21.51 for the class and joint specified with a nominal laying length of 18 (5.5 m) to 20 feet (6 m). Joints for buried ductile iron pipe shall be mechanical or push-on joints. Unless specified otherwise in the Plans or the MWA Standards for Design and Construction Specifications – Article II, Section 2.04 A ductile iron pipe diameters 12 inch (300 mm) or less shall be minimum Pressure Class 350, while pipe diameters greater than 12 inch (300 mm) shall be minimum Pressure Class 250.
2. Ductile iron pipe for the interior of structures and above ground installations shall be flanged. Flanges shall be ductile iron and shall be threaded-on flanges conforming to ANSI/AWWA C115/A21.15 or cast-on flanges conforming to ANSI/AWWA C110/A21.10. The minimum class thickness for ductile iron flanged pipe to be threaded is Class 53.
3. Interior surfaces of ductile iron pipe and fittings shall be ceramic epoxy lined. The standard of quality is Protecto 401 Ceramic Epoxy. Epoxy lining shall be 40-mil nominal dry film thickness. The interior of the ductile iron pipe and fittings shall not have been lined with any substance prior to the application of the specified lining material and no coating shall have been applied to the first 6 inches (150 mm) of the exterior of the spigot ends. The lining shall be applied by a competent firm with a successful history of applying linings to the interior of ductile iron pipe and fittings. Surface preparation, lining of pipe, coating of bell sockets and spigot ends, number of coats, and touch up and repair shall be in accordance with the manufacturer's recommendations. The pipe or fitting manufacturer shall supply a certificate attesting that the applicator met the requirements of this specification; that the material used was

as specified; that the linings have the nominal dry film thickness specified; and that the linings have no pinholes when tested with a nondestructive 2,500-volt test. Lined pipe and fittings shall be handled only from the outside of the pipe and fittings.

4. Ductile iron shall have an exterior asphaltic coating as specified in AWWA C151 for ductile iron pipe and AWWA C153/C110 for ductile iron fittings.
5. Buried ductile iron pipe and fittings shall be polyethylene encased at locations indicated on the Plans or as conditions warrant wherever the ductile iron pipe crosses a gas main. Polyethylene encasement tubing shall be in accordance with ANSI/AWWA C105/A21.5 and ASTM A674 and shall have a minimum thickness of 8 mils. Polyethylene tubing shall be green in color to designate wastewater.
6. Fittings: Ductile iron fittings shall be epoxy coated and meet the requirements of ANSI/AWWA C153/A21.53 or ANSI/AWWA C110 A21.10 with a minimum pressure rating of 250 psi. Pressure pipe fittings shall be restrained mechanical joint.
7. Mechanical Joint Fittings: Mechanical joints consisting of bell, socket, gland, gasket, bolts, and nuts shall conform to ANSI/AWWA C111/A21.11.
8. Push-On Joints: Push-on joints shall be designed in accordance with ANSI/AWWA C111/A21.11. Joint lubrication shall be as furnished by the manufacturer.
9. Rubber gasket joints for push-on or mechanical joints shall conform to the requirements of ANSI/AWWA C111/A21.11.
10. Restrained Joints: Restrained joints shall be provided as shown on the Plans and where required for thrust restraint. Restrained joints shall not require field welding or grooves cut into the pipe barrel for restraint. The restraining joints for mechanical joint fittings shall conform to the requirements of ANSI/AWWA C111/A21.11 with assembly in conformance with AWWA C600 and manufacturer's recommendations. Restrained joints for pipe shall be mechanical joints with ductile iron retainer or push-on type joints and shall have a minimum rated working pressure of 250 psi.
11. Mechanical joint retainer glands may be used to restrain mechanical joint pipe and fittings to the plain end of ductile iron pipe and fittings. Restrainer glands shall be manufactured of ductile iron per ASTM A536.
12. Corrosion-resistant bolts used with ductile iron joints shall be high-strength, low-alloy steel as specified in ANSI/AWWA C111/A21.11.
13. Welded Outlets: Welded outlets in ductile iron pipe shall be provided where specified and indicated on the Plans. Outlets shall be fabricated by welding sections of ductile iron pipe manufactured in accordance with ANSI/AWWA C151/A21.51. Welded outlet pipe shall be fabricated only by the pipe manufacturer. The minimum ductile iron pipe thickness for fabrication of welded outlet pipe shall be Thickness Class 53 for 4 inch to 54 inch (100 mm to 1350 mm) diameter pipe. All joints on welded-on branch outlets shall be provided in accordance with the latest revision of ANSI/AWWA C111/A21.11 and/or ANSI/AWWA C115/A21.15 as applicable. After the outlets are welded together and prior to finishing, the assembly shall be subjected to a 15 psi air test for leakage. The maximum size and laying length of the welded-on branch outlet shall be recommended by the pipe manufacturer and acceptable to the Utility Owner for the field conditions and connecting pipe or valve.

D. Steel Casing Pipe

1. All materials, design, fabrication, handling, and testing of steel casing pipe shall conform to the requirements of ASTM A139, AWWA C200 and AWWA Manual M11 "Steel Pipe – A Guide for Design and Installation."
2. Steel casing pipe shall be new, smooth-wall, carbon steel pipe conforming to ASTM Specification A139, Grade B with minimum yield strength of 35,000 psi. Steel casings shall be used with the size, minimum thickness, length, and coating specified on the Plans-
3. Additional anti-corrosion measures, as specified by the manufacturer or indicated on the Plans, shall be provided at connectors, couplings, rollers, restraints, etc.
4. Unless specified otherwise in the Plans, casing pipe end seals shall consist of ⅛-inch (6 mm) thick flexible synthetic rubber boot with adjustable stainless steel banding straps. The annular space of the casing shall not be filled with concrete or grout.
5. Casing spacers shall consist of a stainless steel shell, PVC ribbed liner, and non-conducting separators to keep the carrier pipe from touching the casing pipe. Spacers shall be provided at a maximum of 10-foot intervals and within 2 feet (0.6 m) of the end of the casing pipe.

E. Pipe Detection Wire

1. Unless otherwise specified in the Plans or the MWA Standards for Design and Construction Specifications – Article II, Section 2.04 B(3), open cut installations of non-metallic pipe shall include minimum #12 gauge tracing wire. Pipe installed by directional drill shall include two (2) insulated 8 gauge tracer wire. Wire shall be solid copper insulated with HDPE installed along pipe, wrapped around service line stub outs and stubbed into valve boxes for locating purposes. Wire shall be properly spliced to provide continuous conductivity.

F. Warning Tape

1. Sanitary sewer mains shall be installed with polyethylene film warning tape manufactured for marking and identifying underground wastewater utilities. Tape shall be a minimum of 2 inches (50 mm) wide and 4 mils thick, green in color, with continuously printed letters reading "CAUTION BURIED SEWER LINE BELOW".

G. Manholes

1. Manholes shall be precast concrete or as indicated in the Plans and per the MWA Standards for Design and Construction Specifications – Article II, Section 2.04 G
2. The minimum diameter for manholes shall be 48 inches (1200 mm). The minimum diameter for inside drop manholes shall be 60 inches 1500 mm). Manhole Types and Classes are described in Section 668.
3. Precast reinforced manholes shall be manufactured in accordance with ASTM C478 and shall have a minimum wall thickness of 5 inches (127 mm). All concrete shall have a minimum compressive strength of 4,000 psi when tested in accordance with ASTM C478.
4. The bases shall be monolithically cast and shall consist of a manhole bottom and a wall which shall extend a minimum of 6 inches (150 mm) above the top of the highest in-flowing sewer. The top of the base section shall be tongue and groove section.
5. There shall be a minimum distance of 6 inches (150 mm) between the invert of the lowest out flowing sewer and floor of the precast base to provide for the construction of a formed invert and bench wall within the manhole. There shall be a minimum 0.05-foot drop between the inlet and outlet inverts. Inverts shall be constructed of 4,000 psi plant mix concrete. Bench shape and discharge of force mains into manholes shall conform to the requirements of the Georgia EPD Guidelines for Sewage Collection Systems.
6. Joints between precast sections shall be sealed by means of rubber O-ring gaskets or flexible butyl rubber sealant.
7. Manholes shall have factory applied coatings on the interior and exterior. Surface preparation and coating application shall comply with the manufacturer's recommendations.
8. Manhole sections shall be rejected if abused during shipping or placement and if pipe openings are not properly aligned.
9. A protective coating or lining for corrosion protection shall be applied to interior surfaces of new manholes and existing manholes that are to be adjusted or reconstructed and existing manholes that are being tied into, within the project limits. Coating varies per installation, as follows:

   A. Existing (Rehabilitated) Manhole: Liner shall be a high-build fiber-reinforced epoxy liner for concrete structures exposed to severe wastewater environments. Liner shall be applied in two coats. First coat shall be a surface skim coat with a minimum thickness of 1/16" to fill all voids. Top coat shall be a protective coat that is spray applied at a minimum thickness of 80 mils. Allowable products are TNEMEC MortarClad Series 218 / Perma-Glaze Series 436 FR; LaFarge SewperCoat; or an Engineer-approved equal.

   B. New Manhole: Liner shall be AGRU Sure Grip concrete protective liner made from either High-Density Polyethylene (HDPE) or Polypropylene Random Copolymer (PP-R) with a minimum thickness of 2 mm. The lining shall be repairable at any time during the life of the structure. Only AGRU certified fabricators may be used to custom fit the liner to the formwork. The interior surfaces to be protected shall include the walls, floor, ceiling, and pipe entries.

10. Pipe entry holes shall be either precast or cored. Connections between reinforced concrete manhole structures and sewer pipe shall be flexible connectors conforming to ASTM C 923 latest revision.
11. Frame and covers shall be cast or ductile iron and set in a bed of mortar on the top of the manhole and flush with finished grade. Covers shall be marked as indicated in the Utility Owner standard details.
12. Watertight manhole rings and covers are to be used if the manhole is located within the 100-year floodplain boundary or may be flooded by street runoff.
13. Riser adjusting rings shall be a minimum of 3 inches (80 mm) on cone sections. Manhole adjustment rings shall be sealed with a flexible rubber seal.
14. Drop manhole: Inside or outside drop inlets shall be provided into sanitary sewer manholes for incoming lines having inverts 2 feet (0.6 m) or more above the inverts of the manhole outlet lines. Drop pipes shall be the same size as the sewer that they serve. Openings in walls of precast concrete manholes for outside drop connections shall not be made at joints. Outside drop piping materials and encasement/embedment shall be as indicated in the Plans. Concrete used to encase the outside drop piping shall be 4,000 psi plant mix concrete unless otherwise indicated on the Plans.
15. Manholes located in the roadway require a double-stack ring in accordance with the GDOT Utility Accommodation Manual.

660.2.02 Delivery, Storage, and Handling

A. Handle pipe, fittings, valves, and accessories carefully to prevent damage. Handle pipe by rolling on skids, forklift, or front end loader. Do not use material damaged in handling. Slings, hooks, or pipe tongs shall be padded and used in such a manner as to prevent damage to the exterior coatings or internal lining of the pipe. Do not use chains in handling pipe, fittings, and appurtenances.

B. To unload pipe, carefully lift and lower it into position using approved padded slings, hooks, or clamps. Furnish equipment and facilities for unloading, handling, distributing, and storing pipe, fittings, valves, and accessories. Make equipment available at all times for use in unloading. Do not roll, drop or dump materials. Any materials dropped or dumped shall be subject to rejection without additional justification.

C. Stored materials including salvaged materials shall be kept in suitable areas safe from damage. The interior of all pipe, fittings, and other appurtenances shall be kept free from dirt or foreign matter at all times. Store and support plastic pipe to prevent sagging and bending. Store plastic pipe and gaskets to prevent exposure to direct sunlight. Valves shall be stored and protected from damage by freezing.

D. Pipe shall not be stacked higher than the limits recommended by the manufacturer. The bottom tier shall be kept off the ground on timbers, rails, or concrete.

660.3 Construction Requirements

660.3.01 Personnel

A. General Provisions 101 through 150.

B. Construction and installation of all wastewater utilities shall be performed by a Contractor prequalified/registered with GDOT.

C. All work specified in this section shall be performed by a Contractor with a valid Utility Contractor's license issued by the State of Georgia. Sewer service line installation shall be performed by either a Utility Contractor licensed in the State of Georgia or by a Master Plumber licensed in the State of Georgia.

660.3.02 Equipment

A. Ensure all equipment used is in conformance with the requirements and standards set forth in the MWA Standards for Design and Construction Specifications.

660.3.03 Preparation

General Provisions 101 through 150.

660.3.04 Fabrication

General Provisions 101 through 150.

660.3.05 Construction

A. Finding Existing Underground Utilities and Obstructions

1. In accordance with Georgia Law, the Contractor shall call the Utility Protection Center, 811, to request utilities to be marked for all areas where construction activities are conducted.
2. Comply with Subsection 107.13 and Subsection 107.21.
3. According to the best information available to GDOT, all known sewer lines, water lines, gas lines, telephone conduits, drainage structures, etc. are shown on the Plans. However, to find such installations, use an electronic pipe and cable finder for locating existing installations or obstructions to the work.
4. Obtain approval from GDOT Project Manager and the Utility Owner prior to disruption of wastewater services required for the installation of the facilities shown on the project Plans.

B. Jack and Bore

Comply with Section 615 for sewer main installations by jack and bore.

C. Directional Drilling

1. Install sewer mains and services by means of directional drilling at locations shown on the Plans or where approved by GDOT or Utility Owner. Provide submittals and follow all relevant procedures and requirements set forth in the MWA Standards for Design and Construction Specifications – Article II, Section 2.19
2. The Contractor shall not initiate horizontal directional drilling until all submittals are received, reviewed, and accepted by GDOT and the Utility Owner, and all required permits are obtained.
3. The Contractor shall select drilling additives and fluid mixture proportions to ensure continuous circulation, bore stability, reduce drag on the pipe, and completely fill the annular space between the bore and the pipe to ensure stability and control settlement.
4. The Contractor shall submit contingency plans for remediation of potential problems that may be encountered during the drilling operations. The contingency plans shall address the observations that would lead to the discovery of the problem and the methods that would be used to mitigate the problem. Potential problems that shall be addressed include:
    a. Loss of returns/loss of circulation of drilling fluid.
    b. Encountering obstruction during pilot bore or reaming/pullback.
    c. Drill pipe or product pipe cannot be advanced.
    d. Deviations from design line and grade exceed allowable tolerances.
    e. Drill pipe or product pipe broken off in borehole.
    f. Product pipe collapse or excessive deformation occurs
    g. Utility strike.
    h. Hydrolock occurs or is suspected.
    i. Excessive ground settlement or heave of ground surface or existing utilities.
    j. Inadvertent returns/hydrofracture or surface spills resulting in drilling fluids entering water or reaching the surface.

5. Pipe damaged in directional drilling operations shall be removed and replaced at no additional expense to GDOT or the Utility Owner.
6. Voids developed or encountered during the installation operation shall be pressure grouted with a grout mix approved by GDOT.
7. Installation shall include a locatable conduit system, with identification markers on each side of GDOT right-of-way where applicable. Two (2) insulated 8 gauge solid copper tracers wire shall be attached to the leading end of the pipe pulling head and shall extend the full length of the installed pipe.
8. The location and alignment of the pilot drill progress shall be continuously monitored for compliance with the proposed installation alignment and for verification of the depth of the bore. Monitoring shall be accomplished by computer generated bore logs which map the bore path based on x, y, z coordinate information provided by the locating/tracking system. Readings or plots shall be obtained on every drill rod, and shall be provided to the Inspector on a daily basis. Deviations between the recorded and design bore path shall be calculated and reported on the daily log. If the deviations exceed tolerances specified elsewhere, such occurrences shall be reported immediately to GDOT. The Contractor shall undertake all necessary measures to correct deviations and return to design line and grade.
9. Upon completion of the directional drill the Contractor shall furnish GDOT and the Utility Owner an as-built drawing along with a report of the monitoring of the drilling fluids during the pilot hole and back reamed hole.
10. Drilling fluid pressures, flow rates, viscosity, and density shall be monitored and recorded by the Contractor. The pressures shall be monitored at the pump. These measurements shall be included in daily logs submitted to GDOT. The Contractor shall document modifications to the drilling fluids, by noting the types and quantities of drilling fluid additives and the dates and times when introduced. The reason for the addition of drilling fluid additives or other modifications shall be documented and reported.
11. Management and disposal of drilling fluids shall be the Contractor's responsibility. Excess drilling fluids shall be contained at the entry and exit points until recycled or removed from the site. All drilling fluids shall be disposed of in a manner acceptable to the appropriate local, state and federal regulations. The Contractor's work will be immediately suspended by GDOT whenever drilling fluids seep to the surface other than in the boring entrance or exit pit, or when a paved surface is displaced.
12. Surfaces damaged by the work shall be restored to their preconstruction conditions at no additional cost to GDOT or Utility Owner, and with no increase in contract time.
13. The following items shall be as shown on the Plans, unless otherwise approved in writing by GDOT:
    a. Entry / exit points
    b. Drill entry / exit angles
    c. Pilot bore path
        1) Radius of Curvature
        2) Entry / exit tolerances: Contractor shall be solely responsible for all work necessary to correct excessive deviations from line and grade, including re-drilling, redesigning connections, and acquiring additional easement, at no additional cost to GDOT or Utility Owner and without schedule extension.
14. The pilot bore shall be pre-reamed and reamed using equipment and methods submitted by the Contractor. The Contractor shall completely ream the bore to the final diameter prior to pullback.
15. Pullback: The pipe shall be installed by pulling it into the reamed bore path in a continuous operation, behind a final reaming tool selected by the Contractor. The pipe shall be isolated from excessive torsional and axial stresses by a swivel device with a pre-established breakaway tensile capacity that is lower than the allowable tensile strength of the pipe. The maximum pull (axial tension force) exerted on the pipelines shall be measured continuously and limited to the maximum allowed by the pipe manufacturer with an appropriate factor of safety so that the pipe or joints are not overstressed. The end of the pipe shall be closed during the pull back operation.

16. Pipelines shall be adequately supported during installation so as to prevent overstressing or buckling. The Contractor shall provide adequate support/rollers along the pipe layout area to support the required length of pipe for the bore. The pipe layout area shall be cleared of all large stones, construction debris, or other foreign objects that could damage the pipe during pullback. The Contractor shall monitor and inspect pipe rollers and method for suspending pipe at entry during the pullback operation to avoid damage to the pipe.
17. The end of the pipe shall be closed during the pull back operation.
18. Each length of pipe shall be inspected and cleaned as necessary to be free of debris immediately before joining.
19. The Contractor shall at all times handle the pipe in a manner that does not overstress or otherwise damage the pipe. Vertical and horizontal curves shall be limited so that wall stresses do not exceed 50% of yield stress for flexural bending of the pipe. If the pipe is buckled or otherwise damaged, the damaged section shall be removed and replaced by the Contractor at his expense. The Contractor shall take appropriate steps during pullback to ensure that the pipe and tracer wires will be installed without damage.
20. If necessary, the pipe shall have water added as it enters the bore to achieve neutral buoyancy and reduce pullback loads and to ensure that adequate internal pressure is maintained at all points to counter balance collapse pressures.
21. The Contractor shall cease pullback operations if the pipe is damaged and shall remove the pipe from the bore and repair the pipe using the manufacturer's recommended procedure or replace the damaged pipe before resuming installation.
22. Damage to the pipe resulting from manufacturer defects, installation, or grouting is the responsibility of the Contractor, including costs for replacement and labor and materials. To confirm no damage to the pipe, upon completion of pull back, the Contractor shall pull a sphere or pig through the entire length of the pipeline. The pig shall be one inch less in diameter than the internal diameter of the product pipe, capable of allowing water to pass through it, complete with a pulling cable on either side. If the pig or sphere cannot pass through the pipe, it shall be considered collapsed and damaged.
23. After the carrier pipe is completely pulled through the bore, a sufficient relaxation period as recommended by the pipe manufacturer shall be provided before the final pipe tie-in.
24. The Contractor shall conduct a final hydrostatic test of the installed pipeline. Final test shall be in accordance with these specifications. The Contractor shall repair any defects discovered during this test, and repeat until the pipe passes the test.

D. Excavating Trenches

1. The Contractor shall provide all necessary shoring and bracing materials as required to assure safe working conditions and to protect the excavations. The Contractor shall be required to fully comply with all applicable OSHA Excavation Safety Standards. No separate payment shall be made for any special procedure used in connection with the excavation.
2. Excavate trenches to the proper depth and width as follows:
   a. Trench to Grade: Excavated trench bottoms shall be firm, free from boulders, and conform to the established grade. Limit open trench excavation to a maximum of three 300 feet (90 m) ahead of completed backfill.
   b. Care shall be taken not to over excavate except where necessary to remove unstable material, irregularities, lumps, rock, and projections. Unnecessary over excavation shall be replaced at the Contractor's sole expense and in accordance with Subsection 660.3.05.
   c. Excavation carried below the established grade lines shown or established by the Utility Owner shall be backfilled according to Section 207 and Subsection 660.3.05. Use Class I or Class II Soils (defined in Section 810) and firmly compact the soil.
   d. Where the established grade of a trench is in rock, undercut the bottom of the trench by at least 6 inches (150 mm) beneath the pipe or conduit and the greater of 24 inches (600 mm) wider than the pipe/conduit (12 inches

or 300 mm each side) or 42 inches (1050 mm) wide, then backfill and compact according to Subsection 660.3.05.

e. Open cut excavation in pavement and pavement patching shall be according to GA Standard No. 1401. Remove the pavement according to Section 444, except no separate payment shall be made for sawed joints.

f. Dewatering: Remove all water from excavations and maintain the excavations free of water while construction therein is in progress. Provide dewatering equipment as necessary to conform to this requirement. Dewatering procedures must meet all state and local regulatory requirements.

3. Minimum Trench Depth

a. Excavate trenches to provide at least 48 inches (1.2 m) cover depth directly above the pipe to the finished pavement surface, sidewalk, grass, etc. unless indicated otherwise on the Plans or by GDOT Project Manager and Utility Owner. In order to avoid existing utilities, it may be necessary for the pipe to be laid shallower or deeper than the minimum cover specified. At such time the Contractor shall not be allowed extra compensation for additional excavation necessary for deeper installations.

b. Side slopes of the trenches shall be as nearly vertical as practicable. Trenches in excess of 5 feet (1.5 m) deep shall either have the trench sides laid back to conform to OSHA requirements for trench safety, if such area is available within the limits of excavation, or, alternatively, trenches deeper than 5 feet (1.5 m) shall be excavated via trench box or shored and braced.

4. Trench Width: Excavate trenches to uniform widths, wide enough to allow proper installation of pipe, fittings, and other materials, a minimum of 6 inches (150 mm) and a maximum of 12 inches (300 mm) each side of the pipe or conduit.

5. Trench Bell Holes: Excavate bell holes deeply and widely enough to make joints and to allow the pipe barrel to rest firmly on the trench bottom.

6. Trench bottom: Excavate and shape trench bottoms to provide uniform bearing and support of pipes and conduits. Shape subgrade to provide continuous support of bells, joints, and barrels of pipes and for joints, fittings, and bodies of conduits/pipes. Remove projecting stones, tree roots, debris, and sharp objects along trench subgrade. Abrupt changes in grade of the trench bottom shall be avoided. Unless otherwise indicated in the Plans, trenches for force mains shall be graded to avoid high and low points that necessitate air release valves.

7. Excavations may be excavated and refilled either by hand or by machinery. Hand tool excavation shall be conducted where necessary to protect existing utilities and structures.

8. In the event that unsuitable material is encountered at or below the excavation depth specified or shown on the Plans, GDOT Project Manager shall be notified immediately before proceeding with any additional work. Such material shall be removed and replaced with suitable material in accordance with Section 205.

E. Connecting to Existing Mains

1. Connect to an existing main with the appropriate fittings according to the Plans and GDOT Project Manager. When making connections under pressure, furnish and use a tapping sleeve and valve assembly or line stop fittings as indicated. Coordinate with Utility Owner 72 hours in advance for wastewater service interruptions and temporary shut-offs. Evening or weekend work may be required to complete direct connections and tie-ins. Connect to existing mains as follows:

a. Before opening new pipeline trenches, locate the various points of connection to be made into existing pipelines. If necessary, uncover pipelines for the Utility Owner and GDOT Project Manager to prescribe the connections and fittings needed.

b. Provide temporary line stops, associated fittings, and bypass pumping as indicated on the Plans and as necessary when cutting and plugging existing sewer mains to prevent service interruptions.

F. Laying Sewer Mains and Appurtenances

1. Preparing and Handling Pipes

a. Thoroughly clean the pipe and fittings before laying them. Keep them clean until accepted.

b. Use suitable tools and equipment. Do not damage the pipe, especially the lining inside the pipe.

c. Cut pipe in a manner to avoid damage to pipe or lining, leaving a smooth end at right angles to pipe axis. Smooth and bevel edges of cut pipe for push-on, gasket type joints.

d. Bedding shall be provided as specified by the project plans or pipe manufacturer for the type of conditions encountered. Bedding typically consists of granular soil free of lumps, clods, cobbles, and frozen materials, and shall be graded to a firm-but-yielding surface without abrupt changes in bearing value. Unstable soils and rock ledges shall be undercut from the bedding zone and replaced with suitable material.

e. Bed pipe on coarse granular material in flat bottom trench with entire pipe barrel bearing uniformly on coarse granular material, except for an approximately 18-inch (450 mm) gap at pipe balance point for sling removal. Hand excavate and backfill as required to provide uniform and continuous bearing and support for the pipe. Do not support pipe on hubs or end bells. Consolidate coarse granular material under and around pipe up to pipe centerline by tamping.

f. Join pipe with bells facing direction in which laying operation is progressing. Lay pipe upgrade wherever line grade exceeds 10%.

g. Carefully examine pipe for cracks and other defects and do not lay defective pipe. If pipe or castings appear to be cracked, broken, or defective after laying, remove and replace those sections.

2. Alignment and Gradient

a. Ensure that pipe alignment and gradient are according to the lines and grades on the Plans. Pressure pipe alignment shall be either straight or deflected to closely follow true curves. Deflect pipe lines only where required, within allowable horizontal and vertical deflection angles according to the manufacturer.

b. Sewers shall be laid at least 10 feet (3 m) horizontally from any existing or proposed water main. The distance shall be measured edge-to-edge. When local conditions prevent a horizontal separation of 10 feet (3 m), the sewer may, on a case-by-case basis, be laid closer to a water main provided the water main is in a separate trench or on an undisturbed earth shelf located on one side of the sewer at such an elevation that the bottom of the water main is at least 18 inches (450 mm) above the top of the sewer.

c. Maintain a vertical separation of at least 18 inches (450 mm) between the crown of sanitary sewers and the invert of existing or proposed water mains with the sewer main located below the water main.

d. Where a vertical separation of 18 inches (450 mm) cannot be provided, and the sewer main cannot be relocated to provide adequate clearance, the section of sewer main passing over or under water mains shall be constructed of materials and with joints that are equivalent to water main standards of construction and in accordance with Section 670, or the sewer line shall be encased in a watertight carrier pipe in accordance with Section 670, extending 10 feet (3 m) on both sides of the crossing measured perpendicular to the water main and shall be pressure tested to assure water-tightness to 150 psi prior to backfilling.

3. Special Requirements for Laying Sewer Mains

a. Excavate, clean, lay, joint, and backfill progressively and uniformly according to these requirements:

1) Never leave pipe in the trench overnight without completely jointing and capping.
2) Do not leave completed pipeline exposed in the trench. Backfill and compact the trench as soon as possible after laying, jointing, and testing are complete.
3) At the close of work each day and when laying pipe, close the exposed end of the pipeline in the trench with an approved wood or metal head or barrier.
4) If necessary to cover the end of an incomplete pipeline with backfill, close the end of the pipe with a satisfactory cap or plug.

G. Installing Sewer Mains by Open Cut

1. Use the following flexible joints for connections inside the roadway shoulders or curbs and gutters:

a. Mechanical Joints

1) When using mechanical joints, thoroughly wash bell sockets, spigots, gland, gasket, nuts, and bolts with soapy water before assembly. Keep these parts wet until the jointing operation is complete.

2) Tighten nuts within the torque range recommended by the manufacturer. Check the tightening tolerance with a torque wrench.

3) If effective sealing is not attained at the maximum recommended torque, disassemble, thoroughly clean, and then reassemble the joint.

4) Do not overstress bolts to compensate for improper installation or defective parts.

b. Push-On Type Joints

1) Use push-on joints made according to the manufacturer's recommendations.

2) Install PVC pipe in accordance with AWWA C605.

3) Install ductile iron pipe in accordance with AWWA C600.

2. Restraints for pipe joints and fittings shall be provided as specified and as shown on the Plans. Restraints shall be installed per manufacturer's recommendations.

3. Buried ductile iron pipe and fittings which cross gas mains shall be polyethylene encased as specified and/or as indicated on the Plans. Polyethylene encasement tubing shall be secured with polyethylene tape and installed in accordance with ANSI/AWWA C105/A21.5.

4. Use pipe cutters when cutting pipe or special castings. Do not use a hammer, chisel, or a cutting torch.

5. Backfilling

a. Furnish equipment, labor, and when necessary, suitable material to conform with the MWA Standards for Design and Construction Specifications –Article II, Section 2.10 required for backfilling the pipe line trenches according to Section 207, and as follows:

1) When testing for leaks in open trenches, do not backfill until testing is complete and leaks are eliminated.

2) When retaining pavement adjacent to trenches, replace removed pavement with the same or better material when approved in accordance with the appropriate Section for the pavement type replaced.

3) Place backfill on subgrades free of mud, frost, snow, or ice.

4) Place and compact bedding course on trench bottoms and where indicated. Shape the bedding course to provide continuous support for bells, joints, and barrels of pipes and for joints, fittings, and bodies of conduits/pipes.

5) Backfill shall include Class I or Class II Soils as defined in Section 810 or suitable material that conforms with the MWA Standards for Design and Construction Specifications –Article II, Table2.10-1

6) Backfill shall be placed in two stages: first, side fill to a height of 12 inches (300 mm) above the top of pipe; second, overfill to former surface grade. Side fill shall consist of granular material laid in 6-inch (150 mm) layers each consolidated by mechanical tamping and controlled addition of moisture, to a density of 95% as determined by the Standard Proctor test (AASHTO T-99 Method D) or GDT 67. Overfill shall be layered and consolidated to match the entrenched material in cohesion and compaction. The top 12 inches (300 mm) shall be compacted to 100% of specified density. Consolidation by saturation or ponding shall not be permitted.

7) Soil Moisture Control: Uniformly moisten and aerate subgrade and each subsequent fill or backfill soil layer before compaction to within 2% of optimum moisture content. Remove and replace, or scarify and air dry, otherwise satisfactory soil material that exceeds optimum moisture content by 2% and is too wet to compact to specified dry unit weight.

8) Initial backfill shall be carefully compacted under pipe haunches and evenly up on both sides and along the full length of piping or conduit to avoid damage or displacement of piping or conduit. Place and compact fill

and backfill of satisfactory soil to final subgrade elevation. Backfill voids with satisfactory soil while removing shoring and bracing and/or trench boxes.

9) After backfilling, maintain temporary surface restoration per GA Standard No. 1401 until permanent repaving is complete. No separate payment shall be made for replaced pavement.

H. Installation of Manholes

1. Each manhole location within the trench shall be over excavated to receive a minimum of 8 inches (200 mm) of No. 57 stone to establish a firm foundation for the manhole. Where the excavation reveals an unsuitable foundation, whether rock or muck, the Contractor shall remove unsuitable material and install No. 57 stone in 6-inch (150 mm) lifts to a maximum of 2 feet (0.6 m) as a foundation for the structure.
2. All manholes shall be installed plumb.
3. Horizontal joint sealant protruding into the manhole shall be cut smooth against the interior wall. Interior joints shall not be grouted unless otherwise directed.
4. Exterior wrap shall be installed centered over joints between manhole sections. Exterior manhole wall shall be clean prior to installing wrap.
5. Backfill adjacent to manholes shall be mechanically compacted in 12-inch (300 mm) lifts symmetrically around the perimeter of the manhole up to the frame and cover, and in accordance with Subsection 660.3.05.
6. Manholes shall be set flush with finished pavement grades where located beneath roadways, sidewalks, or other paved surfaces.
7. All lifting holes or equipment mounting holes shall be filled in completely and made watertight per manufacturer's recommendations.
8. Apply protective liner as described in 660.2.01G.

I. Connections to Existing Manholes

1. Whenever new sewers are connected to existing manholes, pipe openings shall be core drilled with approved equipment to accommodate new pipe. Such connections to existing manholes shall be installed in accordance with manufacturer's recommendations for neoprene boot, link seal or equal. All cuts shall be coated with an appropriate protective coating.
2. The bottom of the manhole shall be reworked and shaped to accommodate the new connections.
3. Apply protective liner as described in 660.2.01G.

J. Laying Sewer Laterals and Appurtenances

1. Except as modified in this Section, construct and install sewer laterals according to the Plans and the requirements for laying sewer mains. Install service lines at locations shown on the Plans or where designated by the Utility Owner and GDOT Project Coordinators.
2. Trench depth and backfill cover may be adjusted at the discretion of the Utility Owner and GDOT Project Coordinators to provide at least 18 inches (450 mm) of cover.
3. Install wyes or tees in the locations shown on the Plans for connection of existing or future service lines. Install laterals with proper grade and alignment to the property line shown on the Plans.
4. New laterals shall extend from the sewer main to the edge of the right-of-way (no more than 5 feet (1.5 m) from the edge of the right-of-way line) where they shall be plugged using a stopper of appropriate size. Sewer laterals shall be tapped into sewer trunk lines using the appropriate tapping machine.
5. Laterals shall be bedded and backfilled in accordance with bedding requirements shown on the Plans and specified herein.
6. Lateral connections shall not be made by knocking a hole in the main or manhole, inserting the lateral pipe, and sealing with grout.

7. Unless otherwise indicated in the Plans, sewer laterals shall be a minimum of 4 inches in diameter for residential services. Commercial, industrial, institutional, and other non-residential services shall match the existing size and shall extend from the main and terminate with a clean-out constructed at the edge of right-of-way.

K. Cutting and Capping Existing Sewer Mains

1. Disconnect by sawing or cutting and removing a segment of existing pipe where cutting and capping or plugging is shown on the Plans or directed by the Authority or GDOT Project Coordinators. Provide a watertight pipe cap or plug and restraint mechanism to seal off existing mains indicated to remain in service. If sewer main is to be abandoned or removed and not specified to be grout filled, seal ends with a pipe cap or plug or with a masonry plug and minimum 6-inch (150 mm) cover of concrete on all sides around the end of the pipe or wherever sewer pipe is severed either accidentally, or intentionally for construction purposes to avoid a conflict with other construction items.
2. The Contractor shall be responsible for uncovering and verifying the size and material of the existing main to be capped or plugged.
3. Sewer mains larger than 6 inches (150 mm) shall be removed or filled with flowable fill per Section 600 at the locations indicated on the Plans.
4. Sewer mains shall be cleaned prior to placement of flowable fill. Use concrete or grout pumps capable of continuous delivery at planned placement rate with sufficient pressure to overcome friction and fill the sewer main.

L. Abandon Existing Manhole

1. The manhole shall be cleaned and grout filled with to an elevation 18 inches above the crown of the highest entry pipe. The remained shall be filled with #57 or select backfill material as approved by the engineer. All pipes entering the manhole shall be plugged or grout filled. The top portion of the manhole structure shall be removed in order to establish a minimum of 4 feet cover from subgrade or finished grade when not under the pavement.

M. Relocating, Adjusting, and Removing

1. Lift Stations
   a. Demolish and install new lift station (if required) as indicated on the Plans. Refer to Special Provision 610.
2. Manholes
   a. Frames and covers shall be removed and manhole shall be adjusted to grade. Adjustment shall be made by adding or removing brickwork, concrete, riser rings, or other materials in accordance with the Plans.
   b. Within roadways, manholes shall be brought to final grade prior to paving. A minimum area of 12 inches (300 mm) wide (from edge of manhole ring) and a minimum of 12 inches deep shall be excavated around the adjusted frame and cover prior to final paving. The excavated area shall be brought to the grade of the roadway base material with a minimum of 3,000 psi concrete in preparation of final paving.
   c. Apply protective liner as described in 660.2.01G.
3. Remove Manholes
   a. Manholes which must be removed to avoid conflict with other construction shall be demolished, either in whole or in part. Portions of the manhole which remains in place shall be abandoned as defined in the paragraph for Abandon Existing Manhole.
4. Utility related items identified on the Plans to be salvaged are the property of the Utility Owner. Contractor shall coordinate with Utility Owner on delivery of salvaged materials. Should the Utility Owner choose to not accept these materials they shall be removed from the project site as soon as practical.
5. Remove Sanitary Sewer Pipe
   a. Completely remove contents of the sanitary sewer pipe as required by the State Department of Health and local authorities.

b. Remove and dispose of sanitary sewer pipe off-site. Backfill trenches and other excavations dug for removing sanitary sewer pipe in accordance with Section 610 Sub-Section 610.3.05 G. Backfilling.

N. Bypass Pumping

1. The Contractor shall provide for continuous transmission of all flows in the sewer system by providing for temporary bypass pumping where necessary to accommodate construction activities.
2. All flow shall be pumped around segments or structures during the installation and testing of the new sewer, sewer connections/reconnections, and the replacement of manholes.
3. The bypassed flow shall be discharged into a manhole, on the downstream side of the construction area, thus bypassing the sewer segment(s) under construction.
4. The Contractor's requirements for providing temporary bypass pumping shall include, as a minimum:
   a. Sizing and installing the piping, pumps, valves, and control system.
   b. If applicable, site preparation for placement of bypass pumping equipment.
   c. Providing and installing temporary suction and discharge piping and fittings.
   d. The Utility Owner has available information regarding actual pump run times for all system pump stations. It is the Contractor's responsibility to develop anticipated flow rates related to where temporary pump systems may be required for bypass pumping for sewers. The Contractor shall coordinate with the Utility Owner and obtain approval for the Contractor's proposed bypassing plan for any sewers. The Contractor shall have the capability to disconnect any bypass system and allow the existing conveyance system to accept flows at any time, particularly during wet-weather events.
   e. The Contractor shall ensure that an adequately sized back-up pump be available in the case of lead pump failure. The back-up pump shall be placed where if the primary pump fails, then back-up pumps can be put into use immediately. Back-up pumps shall provide automatic redundancy without requiring personnel starting or switchover.
   f. Providing power and/or fuel required to operate the system, including facilities to prevent spills. No power will be available from the Owner. Separate fuel tanks shall be used for the primary and back-up pumps.
   g. Personnel or automatic controls to adjust the flow rate of the pump system to match the influent flows.
   h. Connection to the Macon Water Authority SCADA system during the life of the temporary bypass pumping system.
   i. Removing all temporary pumping facilities when the work is completed.
5. The release of raw wastewater onto the ground or into a receiving stream is prohibited. The Contractor is responsible for paying all fines imposed for overflows or spills during construction.
6. The Contractor will be responsible for acquiring any necessary environmental, federal, state, local, and any other permits necessary for bypass pumping.
7. Bypass pumps shall be located in areas that do not disturb roadway traffic, nearby residences, places of work, or adjacent construction activities being performed by others. The Contractor is responsible for coordinating with the Utility Owner and GDOT Project Manager for the bypass pump location and operating hours.
8. Bypass pumps shall be sound attenuated with a maximum noise level of 72 dBA at nine meters. Bypass pumps shall be located a minimum of 50 feet from any residential structure.

O. **Abandon Sewer Mains**

1. Sewer mains larger than 6 inches (150 mm) shall be filled with flowable fill per Section 600 at the locations indicated on the Plans.

2. Use concrete or grout pumps capable of continuous delivery at planned placement rate with sufficient pressure to overcome friction and fill the sewer main. Clean sewer lines and video with closed circuit television to identify connections, locate obstructions, and assess condition of pipe. Locate previously unidentified connections, which have not been redirected and reconnected as part of this project, and report them to the MWA and the GDOT Project Manager. During placement of fill, compensate for irregularities in sewer pipe, such as obstructions, open joints, or broken pipe to

ensure no voids remain unfilled. Perform sanitary sewer demolition work prior to starting fill placement. Clean placement areas of sewers and manholes of debris that may hinder fill placement. Remove excessive amounts of sludge and other substances that may degrade performance of fill. Do not leave sludge or other debris in place. Remove free water prior to starting fill placement.

660.3.06 Quality Acceptance

O. Materials Certification

For certain products, assemblies and materials, in lieu of normal sampling and testing procedures by the Contractor, the GDOT, and Utility Owner may accept from the Contractor the manufacturer's certification with respect to the product involved under the conditions set forth in the following paragraphs:

1. Material certifications shall be provided to GDOT Project Manager, who shall distribute to the Utility Owner. Material certifications shall be approved by GDOT and the Utility Owner prior to construction. The certification shall state/specify that the named product conforms to these specifications and requirements of the Utility Owner and GDOT, and representative samples thereof have been sampled and tested as specified.
2. The certification shall either:
    a. Be accompanied by a certified copy of the test results, or on GDOT QPL list, or
    b. Certify such test results are on file with the manufacturer and will be furnished to the GDOT Project Manager and Utility Owner upon demand.
3. The certification shall state/specify the name and address of the manufacturer and the testing agency and the date of tests; and sets forth the means of identification which shall permit field determination of the product delivered to the project as being the product covered by the certification.
4. Submit certification with two copies of the covered product to the GDOT Project Manager, and Utility Owner.
5. GDOT or the Utility Owner will not be responsible for any costs of certification or for any costs of the sampling and testing of products in connection therewith.
6. GDOT and the Utility Owner reserve the right to require samples and test products for compliance with pertinent requirements irrespective of prior certification of the products by the manufacturer. Any materials that fail to meet specification requirements will be rejected.
7. In accordance with the BUY AMERICA requirements of the Federal regulations (23 U.S.C. 313 and 23 CFR 635.410) all manufacturing processes for steel and iron products or predominantly of steel or iron (at least 90% steel or iron content) furnished for permanent incorporation into the work on this project shall occur in the United States. The only exception to this requirement is the production of pig iron and the processing, pelletizing and reduction of iron ore, which may occur in another country. Other than these exceptions, all melting, rolling, extruding, machining, bending, grinding, drilling, coating, etc. must occur in the United States.
    a. Products of steel include, but are not limited to, such products as structural steel piles, reinforcing steel, structural plate, steel culverts, guardrail steel supports for signs, signals and luminaires, and cable wire/strand. Products of iron include, but are not limited to, such products as cast iron frames and grates and ductile iron pipe. Coatings include, but are not limited to, the applications of epoxy, galvanizing and paint. The coating material is not limited to this clause, only the application process.
    b. Records to be provided by the Contractor for this certification shall include a signed mill test report and a signed certification by each supplier, distributor, fabricator, and manufacturer that has handled the steel or iron product affirming that every process, including the application of a coating, performed on the steel or iron product has been carried out in the United States of America, except as allowed by this Section. The lack of these certifications will be justification for rejection of the steel and/or iron product or nonpayment of the work.
    c. The requirements of said law and regulations do not prevent the use of miscellaneous steel or iron components, subcomponents and hardware necessary to encase, assemble and construct the above products, manufactured products that are not predominantly steel or iron or a minimal use of foreign steel and iron materials if the cost

of such materials used does not exceed one-tenth of one percent (0.1%) of the total contract price or $2,500.00, whichever is greater.

P. Alignment Testing

1. Straight alignment of gravity sewers shall be checked by either using a laser beam or lamping. Each segment between manholes shall show at least 90% of the full pipe circle visible when looking from manhole to manhole.

Q. CCTV Inspection

1. All new gravity sewers shall be inspected via closed-circuit televising (CCTV) in accordance with the MWA Standards for Design and Construction Specifications –Article II, Section 2.22.
2. The Contractor shall thoroughly clean the entire sewer system by jetting or applicable methods prior to the TV inspection. If conditions indicate repairs are necessary, re-televising may be required. The initial inspection shall be scheduled with the Utility Owner and GDOT Project Manager when the Contractor advises that all sewer lines are ready for testing.
3. All TV inspections shall be performed by persons and/or firms qualified in such work. The Contractor shall provide the TV inspection deliverables according to the format indicated in the MWA Standards for Design and Construction Specifications –Article II Section 2.22.

R. Manhole Vacuum Testing

1. A vacuum test shall be performed on each manhole to assure water-tightness in accordance with ASTM C1244. The manholes shall be tested separately from sewer lines.
2. If the manhole fails the initial test, necessary repairs shall be made at the Contractor's expense and the manhole retested until a satisfactory test is obtained.

S. Deflection Testing

1. Utility Owner may require deflection tests utilizing a mandrel to be performed on flexible gravity sewer pipes. Deflection tests shall be conducted after the final backfill has been in place to permit stabilization of the soil-pipe system and follow the requirements of the MWA Standards for Design and Construction Specifications –Article II Section 2.22 B.
2. No mechanical pulling devices shall be used. All pipes not passing this mandrel shall be re-laid or replaced by the Contractor at no additional cost to GDOT or Utility Owner.

T. Leakage Testing

1. The Contractor shall conduct tests to determine the water-tightness of gravity sewers when completed. The Utility Owner shall observe the tests with the Contractor furnishing all required labor, equipment, and materials.
2. Sewers shall be tested in sections with each section extending between two adjacent manholes or from the end of the sewer to the nearest manhole. The Contractor shall utilize an infiltration test, an exfiltration test, or a low pressure air test at the direction of the Utility Owner and in accordance with the MWA Standards for Design and Construction Specifications –Article II Section 2.22 A(1)b.
   a. Infiltration: Each section shall be covered with no less than two feet (0.6 m) of water above the top of the pipe at the highest point. The infiltration will be measured by means of a weir located in the downstream manhole. The pressure head of 2 feet (0.6 m) shall be maintained for a period of not less than 24 hours before the weir measurements are made.
   b. Exfiltration: The sewer at the upstream side of the lower manhole and the upstream side of upper manhole in each section shall be closed with a watertight bulkhead and the sewer filled with water until the water elevation in the upstream manhole is not less than two feet (0.6 m) above the top of the sewer pipe or two feet (0.6 m) above ground water elevation in the trench, whichever is higher. The exfiltration will be determined by measuring the amount of water required to maintain the above stated water elevation for a period of one hour

from the start of the test. The entire length of section to be tested shall be filled and maintained full of water for a period of approximately 24 hours prior to the start of the test.

c. The amount of exfiltration or infiltration shall not exceed 50 gallons per inch of pipe diameter per 24 hours per mile of sewer in each and every section tested in accordance with the above.

d. In the event the allowable leakage rates are not met, the Contractor shall determine the location(s) where excess water is entering or leaving the sewer. The sewer and/or the manholes shall be repaired and retested until the leakage in the sewer is within the allowable limits.

3. Air test: Low pressure air testing shall be completed to detect leaks in sewers where hydrostatic testing is not practical. The Contractor shall perform the low pressure air test as specified in ASTM C924 for concrete and Uni-Bell UNI-B-6-98 for plastic pipe.

660.3.07 Contractor Warranty and Maintenance

General Provisions 101 through 150.

660.4 Measurement

Incidentals including excavation, rock removal, backfilling, flushing, testing, temporary water connections, pavement removal, pavement replacement, and other incidentals required for the installation of water distribution items are not measured for separate payment and shall be included in the applicable Pay Items below. Gravity sewer mains, manholes, force mains, and laterals, and associated items of work in this Specification, complete, in place, and accepted, are measured for payment as follows:

A. Sewer Main

Sewer mains shall be measured in linear feet (meters) for each size and thickness installed. Measurement shall be horizontally above the centerline of the pipe.

B. Manholes

Manholes shall be measured on an individual basis on the depth and type of manhole acceptably installed in accordance to Section 668.

C. Drop Manholes

Manholes shall be measured on an individual basis on the depth and type of manhole acceptably installed in accordance to Section 668.

D. Connection to Existing Manholes

Connection to existing manholes will not be measured separately. Connections to existing manholes shall be included in the Contract price for sewer main.

E. Steel Casing

Steel casing pipe of the wall thickness and diameter specified shall be measured by the linear foot for each size and thickness of steel casing pipe installed in accordance to Section 660 acceptably installed. Measurement shall be horizontally above the centerline of the casing.

F. Abandon Manhole

Abandon manhole shall be measured on an individual basis on the number of each acceptably abandoned in accordance with this Special Provision.

G. Removal of Manholes

Removal of existing manholes shall be measured on an individual basis on the number of each manhole removed in accordance to Section 660.3.05.M5. A and B.

H. Adjustment of Manholes

Adjustment of existing manholes adjusted to grade in their original locations shall be measured on an individual basis on the number of each manhole acceptably adjusted in accordance to Section 611.

I. Cut and Plug Sewer Main

Cutting and plugging of sewer mains will not be measured separately. Cutting and plugging sewer mains shall be included in the contract price for Flowable Fill.

J. Removal of Sewer Mains

Removal of sewer mains shall be measured in linear feet for each size actually removed in accordance to Section 610 and SP 660.3.05 M.5. Measurement shall be above the centerline of the pipe removed and shall include the length of valves, fittings, and cleanouts.

K. Flowable Fill

Flowable fill shall be measured as indicted in Section 600 per cubic yard of flowable fill acceptably installed. When flowable fill is not shown as a pay item, include the cost of the work in the bid price for the appropriate item.

L. Bypass Pumping

Bypass pumping will not be measured separately. Bypass pumping shall be included in the contract price for Sewer Main.

M. Closed Circuit Television (CCTV) Inspection

CCTV inspection will not be measured separately.

N. Abandon Sewer Mains will not be measured separately. Abandon sewer mains shall be included in the contract price for Flowable Fill.

O. Jack and Bore will not be measured separately. Jack and bore shall be included in the contract price for casing.

P. Directional Bore will not be measured separately. Directional bore shall be included in the contract price for casing.

Q. Spacers, straps, blocking, seals and all related appurtenances required to install sewer main in steel casing will not be measured separately. These items shall be included in the contract price for casing.

660.4.01 Limits

General Provisions 101 through 150.

660.5 Payment

The Contract Unit Price for each Item, complete and accepted, shall include all costs incidental to the construction of the item according to the Plans and as specified in this Section. The unit prices bid shall include due allowance for the salvage value of all materials removed from existing or temporary lines and not installed in the completed work. All such surplus items shall become the property of the Contractor unless such surplus items are specified to be salvaged. Payment for any item listed below is full compensation for the Item or Items complete in place.

A. PVC Gravity Main

PVC sewer mains shall be paid for at the unit price per linear foot for each diameter and thickness pipe installed and shall cover the cost for all materials, transportation, labor, equipment, excavation, sheeting and shoring, temporary bypass pumping, installation of pipe, joints and jointing materials, tracer wire, warning tape, protection of existing utilities, connections to existing mains, connection to existing manholes, cleanouts, adjustment of cleanouts, flushing, backfilling, backfill materials, disposal of unsuitable backfill material, clean backfill, tamping, testing, densities, utility crossings, dewatering, trench stabilization, clean-up, restoration, CCTV inspection, and all work and materials necessary to place the pipe into service.

B. Manholes

Sanitary sewer manholes shall be paid for at the unit price in accordance to Section 668 ,according to the depth and type of each manhole installed and shall cover the cost for all materials, transportation, labor, equipment, excavation, sheeting and shoring, installation of manholes including ring and covers, inverts, coatings, protection of existing utilities, backfill material, disposal of unsuitable backfill materials, clean fill, tamping, testing, densities, utility crossings, dewatering, trench stabilization, clean-up, restoration, and all work and materials necessary to install the manhole and place into service. Apply protective liner as described in 660.2.01G.

C. Drop Manholes

Sanitary sewer drop manholes shall be paid for at the unit price per each manhole installed in accordance to Section 668 and shall cover the cost for all materials, transportation, labor, equipment, excavation, sheeting and shoring, installation of manholes including ring and covers, inverts, coatings, outside drop piping and fittings, concrete encasement, protection of existing utilities, backfill material, disposal of unsuitable backfill materials, clean fill, tamping, testing, densities, utility crossings, dewatering, trench stabilization, clean-up, restoration, and all work and materials necessary to install the manhole and place into service. Apply protective liner as described in 660.2.01G.

D. Connections to Existing Manholes

Connections to existing manholes will not be paid for separately. Connections to existing manholes shall be paid for in the Contract Price for sewer main and shall cover the cost for all material, transportation, labor, equipment, excavation, sheeting and shoring, installation of manhole connection, rework of inverts, grout, coatings, protection of existing utilities, backfill material, disposal of unsuitable backfill materials, clean fill, tamping, testing, densities, utility crossings, dewatering, trench stabilization, clean-up, bypass pumping (as required), restoration, and all work and materials necessary to acceptably install the manhole connection. Apply protective liner as described in 660.2.01G.

E. Steel Casing

Steel casing pipe shall be paid for at the unit price per linear foot according to the diameter and thickness of the steel casing installed and shall cover the cost for all materials, transportation, labor, equipment, excavation, sheeting and shoring, protection of existing utilities, steel casing pipe, skid, steel straps, coatings, casing spacers, end seals, boring and jacking pits, backfilling, backfill materials, disposal of unsuitable backfill material, clean fill, tamping, testing, densities, dewatering, trench stabilization, clean-up, restoration, and all work and materials necessary to install the steel casing except where such items are shown to be paid for under a separate Item. The carrier pipe shall be paid for as a separate Pay Item.

F. Abandon Manhole

Abandonment of manholes shall be paid for at the unit price per each manhole abandoned and shall cover the cost for all materials, transportation, labor, equipment, excavation, sheet and shoring, protection of existing utilities, breaking up the foundation, placing filler material, backfilling, backfill material, disposal of unsuitable backfill materials, clean fill, tamping, testing, densities, dewatering, trench stabilization, clean-up, bypass pumping (as required), restoration, and all work necessary to abandon manholes in place.

G. Removal of Manhole

Removal of manholes shall be paid for in accordance with Section 610, at the unit price per each manhole removed and shall cover the cost for all materials, transportation, labor, equipment, excavation, sheet and shoring, protection of existing utilities, backfilling, backfill material, disposal of unsuitable backfill materials, clean fill, tamping, testing, densities, dewatering, trench stabilization, clean-up, bypass pumping (as required), restoration, and all work necessary to remove and dispose of manholes including ring and covers.

H. Adjustment of Existing Manhole

Manhole tops to be raised or lowered 2 feet (0.6 m) or less are considered adjustment of existing manholes, which shall be paid for in accordance with Section 611, at the unit price per each manhole adjusted to final grade and shall cover the cost of all materials, including new ring and covers for sanitary manholes, transportation, labor, equipment, plugs, riser sections, brick and mortar, adjustment rings, excavation, sheeting and shoring, backfilling, backfill material, disposal of unsuitable backfill materials, clean fill, tamping, testing, densities, dewatering, trench stabilization, clean-up, bypass pumping (as required), restoration, and all work and materials necessary to install the new ring and cover and adjust to final grade. Apply protective liner as described in 660.2.01G.

I. Cut and Plug Existing Sewer Main

Cutting and plugging of existing sewer mains will not be paid for separately. Cutting and plugging existing sewer main shall be included in the contract price for Flowable Fill and shall cover all materials, transportation, labor, equipment, excavation, sheeting and shoring, protection of existing utilities, backfilling, backfill material, disposal of unsuitable backfill materials, clean fill, tamping, testing, densities, dewatering, trench stabilization, clean-up, restoration, and all work and materials necessary to cut and plug existing sewer mains.

J. Removal of Sewer Mains

Removal of sewer mains shall be paid for in linear feet for each size actually removed in accordance to Section 610 and SP 660.3.05 M.5. and shall cover the cost for all materials, transportation, labor, equipment, excavation, sheeting and shoring, protection of existing utilities, backfilling, backfill material, disposal of unsuitable backfill materials, clean fill, tamping, testing, densities, dewatering, trench stabilization, clean-up, bypass pumping (as required), restoration, and all work and materials necessary to locate, remove and dispose of the pipe and associated appurtenances. Unless indicated for removal as a separate Pay Item, appurtenances to be removed shall include but not be limited to fittings, isolation valves, air release valves, valve boxes, steel casings, casing spacers, service laterals, thrust blocks, and concrete. All such surplus items shall become the property of the Contractor unless specified to be salvaged by the Utility Owner.

K. Flowable Fill

Flowable fill shall be paid for at the unit price per cubic yard of flowable fill installed as indicated in Section 600 and shall cover the cost for all materials, transportation, labor, equipment, excavation, sheeting and shoring, flushing, plugging air release valves and service connections, cutting and plugging abandoned mains and manholes, installation of flowable fill, protection of existing utilities, backfilling, backfill material, disposal of unsuitable backfill materials, clean fill, tamping, testing, densities, dewatering, trench stabilization, clean-up, restoration, and all work and materials necessary to complete the installation. When flowable fill is not shown as a pay item for the sewer items, include the cost of the work in the bid price for the appropriate item.

L. Bypass Pumping

Bypass pumping will not be paid for separately. Bypass pumping shall be included in the Contract price for sewer main. Work shall include determining system capacity requirements, temporary plugs, provisions for temporary reservoir storage, primary pump and backup pump, control system, connection to Macon Water Authority SCADA system, and all incidental costs.

M. Closed Circuit Television (CCTV) Inspection

CCTV will not be paid for separately. CCTV inspection shall be included in the Contract price for sewer main. Inspection acceptably performed shall cover the costs for all materials, transportation, labor, equipment, excavation, sheeting, shoring, bypass pumping, protection of existing utilities, CCTV inspection, CDs / DVDs, inspection reports, clean-up, restoration, and all work and materials necessary to perform the CCTV inspection.

N. Abandon Sewer Mains will not be paid for separately. Abandon sewer mains shall be included in the contract price for Flowable Fill.

O. Jack and Bore will not be paid for separately. Jack and bore shall be included in the contract price for casing.

P. Directional Bore will not be measured separately. Directional bore shall be included in the contract price for casing.

Q. Spacers, straps, blocking, seals and all related appurtenances required to install sewer main in steel casing will not be measured separately for payment but shall be included in the contract price for casing.

Payment will be made under:

Item No. 600	Flowable Fill	Per cubic yard
Item No. 610	Removable Sanitary Sewer Pipe, _____ In.	Per linear foot
Item No. 610	Remove Manhole	Per each
Item No. 611	Adjust Sanitary Sewer Manhole to Grade	Per each
Item No. 660	Sanitary Sewer Pipe, _____ in.	Per linear foot
Item No. 660	Steel Casing, _____ in., _____ WT	Per linear foot
Item No. 660	Abandon Manhole	Per each
Item No. 668	Sanitary Sewer Manhole, TP __	Per each
Item No. 668	Sanitary Sewer Manhole, TP __, Additional Depth, Class __	Per linear foot

660.5.01 Adjustments

General Provisions 101 through 150.

August 15, 2013
Revised May 16, 2014
Revised July 29, 2015
Revised May 9, 2016
Revised July 29, 2016
Revised August 22, 2016
April 12, 2017

DEPARTMENT OF TRANSPORTATION

STATE OF GEORGIA

SPECIAL PROVISION

PROJECT NO: BRMLB-3223-00(006) & STP00-3223-00(002), Bibb County

PI NO: 342080/351095

Section 670—Water Distribution System

Delete Section 670 and substitute the following:

670.1 General Description

This work consists of furnishing materials, labor, tools, equipment, and other items necessary for installing, removing, abandoning, relocating, and adjusting water distribution systems according to the Plans and Specifications.

670.1.01 Definitions

A. General Provisions 101 through 150

B. Whenever the terms "MWA" or "Authority," are used in this Special Provision and its related documents, it shall be understood to mean Macon Water Authority its subsidiaries, successors and/or assigns, hereafter referred to as Utility Owner.

C. The term "Project Manager" shall mean the authorized individual having the authority to give instructions pertaining to the work and to approve or reject the work. The "Project Manager" shall not however be authorized to revoke, alter, enlarge, relax, or release any requirements of the Contract, Plans, and Specifications, nor shall they act as an agent for the Contractor. All Contract items pertaining to the Utility Owner shall be coordinated with the Georgia Department of Transportation's (GDOT) Project Manager and the Utility Owner.

670.1.02 Related References

A. Standard Specifications

Section 104—Scope of Work

Section 107—Legal Regulations and Responsibility to the Public

Section 108—Prosecution and Progress

Section 205—Roadway Excavation

Section 207—Excavation and Backfill for Minor Structures

Section 210—Grading Complete

Section 400—Hot Mix Asphaltic Concrete Construction

Section 444—Sawed Joints in Existing Pavements

Section 500—Concrete Structures

Section 600—Controlled Low Strength Flowable Fill

Section 611—Relaying, Reconstructing or Adjusting to Grade of Miscellaneous Roadway Structures

Section 615—Jacking or Boring Pipe

Section 810—Roadway Materials

B. Related Documents

1. General Provisions 101 through 150.
2. All products supplied and all work performed shall be in accordance the MWA Standards For Design and Construction Specifications, applicable standards from American Society for Testing and Material (ASTM), American Water Works Association (AWWA), American National Standards Institute (ANSI), GDOT Utility Accommodation Policy and Standards, and the Georgia Environmental Protection Division (EPD) Minimum Standards for Public Water Systems. Latest revisions of all standards shall apply.

670.1.03 Submittals

A. General Provisions 101 through 150.

B. Refer to the MWA Standards for Design and Construction Specifications – Article I, current published edition, for water utility submittal requirements. Copies of all submittals and documentation shall be submitted to GDOT, who shall distribute to the Utility Owner. Submittals will be approved by Macon Water Authority and/or the Authority's Engineer.

C. Shop Drawings / Product Data

1. Submit [4] copies of the following submittals to the GDOT Project Manager:
   a. Product data, including size, dimension, capacity, pressure rating, accessories, and special features, installation instructions, and operating characteristics for all proposed materials to show compliance with the requirements of this Special Provision.
   b. Test reports specified in the Quality Acceptance section of this Special Provision.
   c. Pipe manufacturer certification of compliance with specifications.
   d. Operation and maintenance literature, warranties, and other specified information.

D. Construction Record Documentation (Macon Water Authority Specification 01720)

1. SCOPE
   a. The work under this Section includes, but is not necessarily limited to, the compiling, maintaining, recording and submitting of project record documents as herein specified.
   b. Record documents include, but are not limited to:
      i. Drawings;
      ii. Specifications;
      iii. Change orders and other modifications to the Contract;
      iv. Engineer field orders or written instructions, including Requests for Information (RFI) and Clarification Memorandums;

v. Reviewed shop drawings, product data and samples;

vi. Test records.

c. The Contractor shall maintain on the Project site throughout the Contract Time an up to date set of Record Drawings.

2. MAINTENANCE OF DOCUMENTS AND SAMPLES

a. Storage

i. Store documents and samples in the Contractor's field office, apart from documents used for construction.

ii. Provide files and racks for storage of documents.

iii. Provide locked cabinet or secure storage space for storage of samples.

b. File documents and samples in accordance with format of this Special Provision.

c. Maintenance

i. Maintain documents in a clean, dry, legible condition and in good order.

ii. Do not use record documents for construction purposes.

iii. Maintain at the site for the MWA one copy of all record documents.

d. Make documents and samples available at all times for inspection by MWA Engineer.

e. Failure to maintain the Record Documents in a satisfactory manner may be cause for withholding of a certificate for payment.

3. QUALITY ASSURANCE

a. Unless noted otherwise, Record Drawings shall provide dimensions, distances and coordinates to the nearest 0.1 foot.

b. Unless noted otherwise, Record Drawings shall provide elevations to the nearest 0.01 foot for all pertinent items constructed by the Contractor.

c. The Contractor shall employ a currently registered professional engineer to prepare the Record Drawings from a post-construction, field run survey. The Record Drawings shall provide elevations to the nearest 0.01 foot for all valve depths, valve box covers, meter boxes, fire hydrants and other pertinent items constructed by the Contractor. The Record Drawings shall show water main size, material, fitting location and angle, fire hydrants (with manufacturer and date labeled on drawing), valve boxes, valve size (with valve type and turn direction labeled on drawing), water services and size and meter boxes. The Record Drawings shall provide dimensions, distances, and state plane coordinates to the nearest 0.01 foot and horizontal angles to the nearest 10 seconds.

4. RECORDING

a. Label each document "PROJECT RECORD" in neat, large printed letters.

b. Recording

i. Record information concurrently with construction progress.

ii. Do not conceal any work until required information is recorded.

5. RECORD DRAWINGS

a. Record Drawings shall be reproducible, shall have a title block indicating that the drawings are Record Drawings, the name of the company preparing the Record Drawings, and the date the Record Drawings were prepared. The Contractor will provide drawings submitted in either the (.dxf) or the (.dwg) version R13 or later on a non-rewritable (Read Only) CD, along with two (2) sets of plans in the same format as shown on the disk. The Record Drawings shall be submitted on a (24” x 36”) sheet.

b. Legibly mark drawings to record actual construction, including:

i. All Construction

1. Changes of dimension and detail.
2. Changes made by Requests for Information (RFI), field order, clarification memorandums or by change order
3. Details not on original Drawings

ii. Site Improvements, Including Underground Utilities

1. Horizontal and vertical locations of all exposed and underground utilities and appurtenances, both new facilities constructed and those utilities encountered, referenced to permanent surface improvements.
2. Location of and dimensions of roadways and parking areas, providing dimensions to back of curb when present.
3. The locations shall be referenced to at least two easily identifiable, permanent landmarks (e.g., power poles, valve markers, etc.) or benchmarks.
4. The Record Drawings shall include the horizontal angle and distance between manhole covers.

iii. Structures

1. Depths of various elements of foundation in relation to finish first floor datum or top of wall.
2. Location of internal and buried utilities and appurtenances concealed in the construction, referenced to visible and accessible features of the structure.

6. SPECIFICATIONS
   a. Legibly mark each section to record:
      i. Manufacturer, trade name, catalog number, and supplier of each product and item of equipment actually installed.
      ii. Changes made by Requests for Information (RFI), field order, clarification memorandums, or by change order.
7. SUBMITTAL
   a. Within two (2) weeks of all contract utility components entering service, deliver two (2) sets of Record Documents to the MWA Engineer.
   b. Within two (2) weeks of all contract utility components entering service, deliver one (1) set of Record Documents to the DOT Project Manager.
   c. Accompany submittal with transmittal letter, in duplicate, containing:
      i. Date
      ii. Project title and number
      iii. Contractor's name and address
      iv. Title and number of each record document
      v. Signature of Contractor or Contractor's authorized representative
      vi. Name and address of firm preparing record document
      vii. Stamp by a professional engineer

670.1.04 Quality Assurance

A. The Contractor shall comply with applicable codes, ordinances, rules, regulations and laws of local, municipal, state or federal authorities having jurisdiction over the Project.

B. Furnish manufactured items, pipe, fittings, valves, service components, and appurtenances from manufacturers having regularly produced such items as specified herein which have proven satisfactory in actual service, over at least a 2-year period, or as approved by the Utility Owner and GDOT.

C. Regardless of tolerances permitted by industry standards specified herein, the Utility Owner or the GDOT Project Manager may reject pipe or appurtenances at the manufacturing plant or project site which have cracks, chips, blisters,

rough interior or exterior surface, evidence of structural weakness, joint defects, or other imperfections that might in the opinion of the Project Manager contribute to reduced functional capability, accelerated deterioration or reduced structural strength.

D. The Utility Owner and the Utility Owner's consultant shall have the right to visit and inspect the work at any time. The Utility Owner may also have an Inspector assigned to the project authorized to inspect portions or all of the utility work done and the preparation, fabrication, or manufacture of the materials to be used. The Utility Owner shall be able to advise GDOT Project Manager of any observed discrepancies or potential problems. The cost of these inspections shall be the responsibility of the Utility Owner.

E. GDOT shall notify the Utility Owner before authorizing any changes or deviations which might affect the Utility Owner's facilities. Contractor shall notify GDOT and Utility Owner a minimum of 24 hours prior to beginning work on utilities.

F. The Utility Owner shall be notified by GDOT Project Manager when all utility work is complete and ready for final inspection. The Utility Owner shall be invited to attend the final inspection and may provide a corrections list to GDOT Project Manager prior to the final inspection.

G. The Contractor shall verify the actual location and depth of all utilities prior to construction. All utilities and structures shall be protected during construction. Any damaged facilities shall be repaired or replaced at the Contractor's expense.

670.2 Materials

All materials provided shall be in conformance with the requirements and standards set forth in the MWA Standards for Design and Construction Specifications – Article I, Section 1.04, current published edition. All pipeline and appurtenance materials in contact with potable water shall be National Sanitation Foundation (NSF) 61 Certified and part of GDOT QPL list.

Pipes and appurtenances shall comply with Section 1417(a)(1) of the Safe Water Drinking Act as amended in 2011 which prohibits the use of any pipe, any pipe or plumbing fitting or fixture, and solder, or any flux, after June 1986, in the installation or repair of (i) any public water system; or (ii) any plumbing in a residential or non-residential facility providing water for human consumption, that is not lead free as defined in Section 1417(d).

670.2.01 Water Piping systems and Appurtenances

Ductile Iron Pipe and Fittings

1. Ductile iron pipe shall meet the latest edition of ANSI/AWWA C150/A21.50 and C151/A21.51 for the class and joint specified with a nominal laying length of 18 (5.5 m) to 20 feet (6 m). Joints for buried ductile iron pipe shall be mechanical or push-on joints. Unless specified otherwise in the MWA Standards for Design and Construction Specifications – Article I, Section 1.04 A, ductile iron pipe diameters 12 inch (300 mm) or less shall be minimum Pressure Class 350, while pipe diameters greater than 12 inch (300 mm) shall be minimum Pressure Class 350.
2. Ductile iron pipe for the interior of structures and above ground installations shall be flanged. Flanges shall be ductile iron and shall be threaded-on flanges conforming to ANSI/AWWA C115/A21.15 or cast-on flanges conforming to ANSI/AWWA C110/A21.10. The minimum class thickness for ductile iron flanged pipe to be threaded is Class 53.
3. Interior surfaces of ductile iron pipe and fittings shall be cement mortar lined in accordance with AWWA C104.
4. Ductile iron shall have an exterior coating as specified in AWWA C151 for ductile iron pipe and AWWA C153/C110 for ductile iron fittings.
5. Buried ductile iron pipe and fittings shall be polyethylene encased at locations indicated on the Plans or as conditions warrant wherever the ductile iron pipe crosses a gas main. Polyethylene encasement tubing shall be in accordance with ANSI/AWWA C105/A21.5 and ASTM A674 and shall have a minimum thickness of 8 mils. Polyethylene encasement tubing shall be blue in color to designate potable water.

6. Fittings: Ductile iron fittings shall be epoxy coated and meet the requirements of ANSI/AWWA C153/A21.53 or ANSI/AWWA C110 A21.10 with a minimum pressure rating of 250 psi. Ends shall be restrained mechanical joint. All ductile iron fittings shall bear the NSF approval seal for potable water pipe.
7. Mechanical Joint Fittings: Mechanical joints consisting of bell, socket, gland, gasket, bolts, and nuts shall conform to ANSI/AWWA C111/A21.11.
8. Push-On Joints: Push-on joints shall be designed in accordance with ANSI/AWWA C111/A21.11. Joint lubrication shall be as furnished by the manufacturer.
9. Rubber gasket joints for push-on or mechanical joints shall conform to the requirements of ANSI/AWWA C111/A21.11.
10. Restrained Joints: Restrained joints shall be provided as shown on the Plans and where required for thrust restraint. Restrained joints shall not require field welding or grooves cut into the pipe barrel for restraint. The restraining joints for mechanical joint fittings shall conform to the requirements of ANSI/AWWA C111/A21.11 with assembly in conformance with AWWA C600 and manufacturer's recommendations. Restrained joints for pipe shall be mechanical joints with ductile iron retainer or push-on type joints and shall have a minimum rated working pressure of 250 psi.
11. Mechanical joint retainer glands may be used to restrain mechanical joint pipe and fittings to the plain end of ductile iron pipe and fittings. Restrainer glands shall be manufactured of ductile iron per ASTM A536.
12. Corrosion-resistant bolts used with ductile iron joints shall be high-strength, low-alloy steel as specified in ANSI/AWWA C111/A21.11.
13. Welded Outlets: Welded outlets in ductile iron pipe shall be provided where specified and indicated on the Plans. Outlets shall be fabricated by welding sections of ductile iron pipe manufactured in accordance with ANSI/AWWA C151/A21.51. Welded outlet pipe shall be fabricated only by the pipe manufacturer. The minimum ductile iron pipe thickness for fabrication of welded outlet pipe shall be Thickness Class 53 for 4-inch to 54-inch (100 to 1350 mm) diameter pipe. All joints on welded-on branch outlets shall be provided in accordance with the latest revision of ANSI/AWWA C111/A21.11 and/or ANSI/AWWA C115/A21.15, as applicable. After the outlets are welded together and prior to finishing, the assembly shall be subjected to a 15 psi air test for leakage. The maximum size and laying length of the welded-on branch outlet shall be recommended by the pipe manufacturer and acceptable to the Utility Owner for the field conditions and connecting pipe or valve.

A. Steel Casing Pipe

1. All materials, design, fabrication, handling, and testing of steel casing pipe shall conform to the requirements of ASTM A139, AWWA C200 and AWWA Manual M11 "Steel Pipe – A Guide for Design and Installation."
2. Steel casing pipe shall be new, smooth-wall, carbon steel pipe conforming to ASTM Specification A139, Grade B with a minimum yield strength of 35,000 psi. Steel casings shall be used with the size, minimum thickness, length, and coating specified on the Plans or the MWA Standards for Design and Construction Specifications – Article I, Section 1.15 B(1).
3. Additional anti-corrosion measures, as specified by the manufacturer or indicated on the Plans, shall be provided at connectors, couplings, rollers, restraints, etc.
4. Unless specified otherwise in the Plans or the MWA Standards for Design and Construction Specifications – Article I, Section 1.15 C (1) casing pipe end seals shall consist of ⅛-inch (6 mm) thick flexible synthetic rubber boot with adjustable stainless steel banding straps. The annular space of the casing shall not be filled with concrete or grout.
5. Casing spacers shall consist of a stainless steel shell, PVC ribbed liner, and non-conducting separators to keep the carrier pipe from touching the casing pipe. Spacers shall be provided at a maximum of 10-foot intervals and within 2 feet (0.6 m) of the end of the casing pipe.

B. Warning Tape

1. Water mains shall be installed with polyethylene film warning tape manufactured for marking and identifying underground water utilities. Tape shall be a minimum of 2 inches (50 mm) wide and 4 mils thick, blue in color, with continuously printed letters reading "CAUTION BURIED WATER LINE BELOW".

C. Gate Valves

1. Gate valves 3 inches (80 mm) and larger shall be of the resilient seat type meeting the requirements of AWWA C509 or C515. Valves shall be iron body, bronze trimmed, with non-rising stems, and shall be fusion-bonded epoxy coated per ANSI/AWWA C550. Valves shall have a minimum design working pressure of 200 psi.
2. Valves shall be manually operated by nut and open counter-clockwise unless specified otherwise in the Plans or the MWA Standards for Design and Construction Specifications – Article I, Section 1.04 B.
3. The resilient seating arrangement shall provide zero leakage at the design working pressure when installed with line flow in either direction. All ferrous surfaces inside and outside shall have a fusion bonded epoxy coating. All valves shall be provided with O-ring seals. The design and machining of valves shall be such as to permit replacing the O-ring seals in the valves while in service without leakage.
4. All gate valves, when fully opened, shall have an unobstructed waterway diameter equal to or larger than the full nominal diameter of the valve.
5. In general, valves shall be designed for vertical installation. Valves installed in the horizontal position shall be provided with bevel gears, extended gear case, rollers, tracks, and scrapers.
6. Exposed or above-ground gate valves shall be outside screw and yoke (OS&Y) flanged joint type with an operating hand wheel. The face-to-face dimensions and drilling shall conform to ANSI B16.10 for Class 125 flanged joint end gate valves.
7. Valves shall include mechanical joints, bolts, glands, gaskets, and all other materials necessary to join to existing work.
8. Provide brass identification tag imprinted with "WATER", valve size, valve type, and direction and number of turns to open. Provide a ¼-inch (8 mm) hole in the brass tag and attach the tag to the end of the locate wire (twist wire around tag). Tag shall be 2-inch (50 mm) diameter and ⅛-inch (6 mm) thick brass with a ¼-inch (8 mm) hole.
9. MWA standard gate valve model is American Flow Control with ductile body, or Engineer-approved equal.

D. Insertion Valves

Provide a water main insertion valve and tapping sleeve assembly in accordance with the following:

1. Resilient seat wedge valve must be rated for a minimum 250 psi for use in water distribution systems meeting AWWA C509 or C515 material specifications and all other applicable AWWA requirements for live installation applications.
2. Stainless steel fasteners must be *AISI Type 304* meeting *AWWA A351–CF8M*.
3. Bolt material must be in accordance with *ASTM B 316* and *ASTM B 253*.
4. Valve stem must be in accordance with *AWWA C-500-80*, non-rising stem.
5. Provide a 2 inch standard square operating valve nut with left turn (counterclockwise) to open.
6. Valve body must be ductile iron with epoxy coating meeting AWWA C550 and NSF 61.
7. Valve Box must be in accordance with the standard specifications.
8. Extension stem/shaft, if necessary, must be *AISI Type 304* or *AISI Type 303* stainless steel with bronze couplings.
9. Flanges must be 150 psi rated in accordance with *AWWA C115*.

E. Valve Boxes

1. All valves shall be equipped with valve boxes. The valve boxes shall be heavy, roadway type boxes. The valve box cover shall be marked "WATER VALVE" or "WATER".
2. Valve box materials shall conform to the requirements and standards set forth in the MWA Standards for Design and Construction Specifications – Article I, Section 1.04 B (3) current published edition.
3. The valve boxes shall be adjustable up or down from the nominal required cover over the pipe. Extensions shall be provided as necessary. A precast concrete ring shall be placed around the valve box opening when outside of paved areas.
4. Valves shall be furnished with extension stems as necessary to bring the operating nut to within 24 inches (600 mm) minimum of the top of the valve box.

F. Service Connection Assemblies

1. Water service connections and plumbing should conform to the standards set forth in the MWA Standards for Design and Construction Specifications – Article I, Section 1.04 B(4-6) and relevant local and/or state plumbing codes or to the Standard Plumbing Code as applicable within the jurisdiction in which the system is located.
2. Service connection assemblies shall be provided for all new service line connections to existing meters. Existing service lines indicated for replacement shall be replaced with new materials from the water main to the existing or new water meter.
3. Service connection assemblies shall include:
   a. Service saddle
   b. Corporation stop
   c. Service line
   d. Fittings
   e. Curb stop
   f. Water meter box
   g. Water meter (separate Pay Item for new service connections)
   h. Backflow preventer (separate Pay Item for new service connections)

G. Service Saddles

1. Service saddles shall have ductile iron or bronze body with stainless steel epoxy coated double tie straps and nuts with pressure rating not less than that of the pipe to which it is to be connected.
2. Saddles shall have a rubber gasket cemented to the body, with compatible threading between the saddle and corporation stop. Saddles shall conform to ANSI/AWWA C800 standards.
3. The service saddle shall provide full support around the circumference of the pipe, providing a bearing area of sufficient width so that pipe will not distort when the saddle is tightened.

H. Water Service Pipe

1. Copper tubing for water service lines shall be seamless and shall conform to ANSI/AWWA C800 and ASTM B88, Type K soft, suitable for potable water use with a working pressure of 150 psi.
2. Water service line fittings shall be as indicated in the International Plumbing Code, 2012 Edition, with current Georgia Amendments.
3. Water service lines larger than 2 inches shall be ductile iron pipe tapped off the main, including an isolation gate valve. DIP and fittings shall be as specified under Section 670.2.01. Gate valves shall be as specified under Section 270.2.01.

I. Corporation and Curb Stops

1. Corporation stops, curb stops, and other appurtenances for plastic or copper service lines shall meet the requirements of ASTM B62 and AWWA C800.

2. Service line taps shall be equipped with corporation stops. Corporation stops in sizes 1-inch (25 mm) through 2-inch (50 mm) shall be manufactured from cast bronze with machined fitting surfaces. The corporation shall be pressure rated to no less than 150 psi.
3. Curb stops shall be ball valve type and made of bronze. Pipe connections shall be suitable for the type of service pipe used and shall be pressure rated for no less than 150 psi.

J. Water Meters

1. Water meters shall be MWA standard models as manufactured by Neptune Technology Group, or Engineer-approved equal.

a. Domestic Service Meters: MWA standard models are listed in the following chart.

5/8" x 3/4" Neptune T-10 Meter
1" Neptune T-10 Meter
1 1/2" Neptune T-10 P/D Meter
1 1/2" Neptune Turbine w/ Strainer
2" Neptune Turbine w/ Strainer Ecoder
2" Neptune T-10 Meter
3" Neptune Turbine w/ Strainer Ecoder
3" Tru-Flo Compound Meter
4" Neptune Turbine w/ Strainer Ecoder
4" Neptune Protectus Fire Flow
4" Tru-Flo Compound Meter
6" Neptune Turbine w/ Strainer Ecoder
6" Tru-Flo Compound Meter
6" Neptune Protectus Fire Flow
8" Neptune Turbine w/ Strainer Ecoder
8" Neptune Protectus Fire Flow

b. Irrigation Service Meters: MWA standard models are listed in the following chart.

5/8" x 3/4" Neptune T-10 Meter
1" Neptune T-10 Meter
1 1/2" Neptune T-10 P/D Meter
1 1/2" Neptune Turbine w/ Strainer

2" Neptune Turbine w/ Strainer Ecoder
2" Neptune T-10 Meter
3" Neptune Turbine w/ Strainer Ecoder
4" Neptune Turbine w/ Strainer Ecoder

2. Water meters shall register flow in units of cubic feet.
3. Water meters 2" and larger shall have two-way communications encoder registers and meter interface units with the ability to make time-synchronized, system-wide readings. The integrated encoder / meter interface unit shall be the Neptune E-Coder R900i, or Engineer-approved equal.

K. Meter Boxes

1. Water meter boxes shall be high density reinforced plastic body with one piece cast iron lid with lettering "WATER METER" on cover unless otherwise indicated on the Plans. Recessed hole shall be included in lid, if required by Utility Owner for electronic reading capability. Provide box of size and height appropriate to installation of meter and accessories required. Meter and curb stop shall be fully encased by the meter box.
2. Water meter box shall be of sufficient size to house curb stop, meter, and any other items shown on Plans.
3. MWA standard meter box is Quazite, or Engineer-approved equal.

L. Concrete Vault

1. Concrete vaults shall conform to the requirements and standards set forth in the MWA Standards for Design and Construction Specifications – Article I, Section 1.04 E and standard details.

M. Fire Hydrant Assembly

1. Fire hydrants shall be the compressive, post style, dry barrel type, and shall conform to the requirements of ANSI/AWWA C502 and local code requirements. The valve opening shall not be less than 5 ¼ inch. All hydrants shall be complete including joint assemblies.
2. Hydrants shall be suitable for working pressure of 250 psi and shall be hydrostatically factory tested to 500 psi.
3. All working parts, including the seat ring, shall be removable through the top without excavating or disturbing the barrel of the hydrant.
4. Hydrants shall be constructed with a lubricant chamber which encloses the operating threads and which provides automatic lubrication of the threads and bearing surfaces each time the hydrant is operated. This assembly shall be comprised of a top O-ring serving as a dirt and moisture barrier and a lower O-ring which will serve as a pressure seal.
5. Hydrants shall include two 2½-inch (65 mm) hose nozzles and one 4½-inch (115 mm) pumper connection with National Standard Fire Hose Threads unless specified otherwise in the Plans or the MWA Standards for Design and Construction Specifications – Article I, Section 1.04 F. Hydrant threads shall comply with the specifications of the local agency providing fire service.
6. Hydrant nozzle shall be constructed to face in any direction at any time by removing the safety flange bolts and revolving the head without digging or shutting off water.
7. Hydrants shall have pentagon operating nut measuring 1½-inch (40 mm) point to flat and shall open by turning counter-clockwise.

8. Hydrant shall have a safety-type vertical barrel with a minimum 3½-foot bury and be designed with safety flange and/or bolts to protect the barrel and stem from damage, eliminate flooding, and allow rapid replacement if hydrant is struck. All risers necessary for deeper bury applications shall be provided by the hydrant manufacturer.
9. Hydrants shall include positive, automatic drain valves which shall be fully closed when the main valve is open.
10. Bottom inlet of hydrant shall be provided with mechanical joint connection complete with accessories as specified and shall be 6-inch (150 mm) nominal diameter.
11. Fire hydrant shall be painted above ground with rust inhibiting enamel paint. Hydrant upper barrels shall be prime coated with epoxy coating. Hydrant top coat shall be a catalyzed two-part polyurethane per ASTM D 3359.
12. MWA standard paint color selection:
    a. Hydrant end caps = Federal Spec Yellow #3186
    b. Hydrant weather cover = Silver #822903
13. Hydrant assemblies shall be restrained from the hydrant to the tee at the main.
14. Hydrant assemblies shall include a 6-inch gate valve attached directly to the tee at the main.
15. Hydrants shall be the American B-84-B (manufactured by American Flow Control), or Engineered-approved equal.

N. Backflow Prevention Devices

1. Backflow prevention devices shall be installed where indicated on the Plans and shall meet all applicable AWWA, State, and local code/ordinance requirements.
2. Backflow preventer materials shall conform to the requirements and standards set forth in the MWA Standards for Design and Construction Specifications – Article I, Section 1.04 C.

O. Thrust Collars and Thrust Blocks

1. Concrete used for thrust collars or thrust blocks shall meet the "Class A" requirements for concrete listed in Section 500.
2. Thrust collars shall include welded-on collars attached by the pipe manufacturer or retainer glands. Concrete shall be poured continuous around the pipe and bear against undisturbed earth.
3. Reinforcing steel shall meet the requirements set forth in the Plans or the MWA Standards for Design and Construction Specifications – Article I, Section 1.22.
4. Mechanical joint restraints may be utilized in lieu of thrust blocks with the approval of Utility Owner.
5. Contractor shall calculate concrete dimensions such that weight of concrete resists the full thrust forces determined by multiplying the cross-sectional pipe area by the pipe pressure rating.

P. Manholes

1. Precast reinforced manholes shall be manufactured in accordance with ASTM C478 and shall have a minimum wall thickness of 5 inches (127 mm). All concrete shall have a minimum compressive strength of 4,000 psi when tested in accordance with ASTM C478.
2. Joints between precast sections shall be sealed by means of rubber O-ring gaskets or flexible butyl rubber sealant.
3. Non-shrinking grout or a flexible seal shall be used to seal the pipe penetrations and prevent water from entering the manhole.
4. Manhole rings and cover shall be per the MWA Standards for Design and Construction Specifications – Article I, Section 1.04 E and standard details.

Q. Tapping Sleeves and Valves (TS&V)

1. Tapping sleeves shall be the split valve, mechanical type joint. Valves shall be gate valves furnished in accordance with the above specifications. The valves shall have flange x mechanical joint ends. Tapping sleeves shall be Mueller No. 615 or approved equal. Tapping crosses shall be Mueller No. 716 or approved equal. Tapping valves shall be Mueller No. 687 or approved equal.

2. As an alternative to the conventional tapping sleeve and valve, a stainless steel tapping sleeve with mechanical joint outlet and a standard MJ gate valve could be installed. The MJ tapping sleeve shall meet or exceed the following material specifications for use with a standard mechanical joint x mechanical joint, resilient wedge gate valves per ANSI (AWWA C509-94). The mechanical joint outlet shall be a one piece casting with a plain end and MJ gland. The tapping sleeve shall have a MJ outlet gasket. The armor plate, lugs, nuts, bolts shall be 203 (18-8) stainless steel, and gaskets shall be virgin nitrile, Buna-N or equal.
3. "All stainless steel tapping sleeves" may be used in lieu of the above and shall conform to the following specifications: Body: 18-8 type 304 s.s. flange CF 8 cast stainless steel equivalent to 18-8 type 304 s.s. with ANSI 150 lb drilling; recessed for tapping valve per MSS-SP-60. Bolts: Type 304 s.s. Branch outlet: Heavy s.s. pipe. Gasket: Full circumferential gasket compound for use with water, salt solutions, mild acids, bases and sewage.

670.2.02 Delivery, Storage, and Handling

A. Handle pipe, fittings, valves, and accessories carefully to prevent damage. Handle pipe by rolling on skids, forklift, or front end loader. Do not use material damaged in handling. Slings, hooks, or pipe tongs shall be padded and used in such a manner as to prevent damage to the exterior coatings or internal lining of the pipe. Do not use chains in handling pipe, fittings, or appurtenances.

B. To unload pipe, carefully lift and lower it into position using approved padded slings, hooks, or clamps. Furnish equipment and facilities for unloading, handling, distributing, and storing pipe, fittings, valves, and accessories. Make equipment available at all times for use in unloading. Do not roll, drop or dump materials. Any materials dropped or dumped shall be subject to rejection without additional justification.

C. Stored materials including salvaged materials shall be kept in suitable areas safe from damage. The interior of all pipe, fittings, and other appurtenances shall be kept free from dirt or foreign matter at all times. Store and support plastic pipe to prevent sagging and bending. Store plastic pipe and gaskets to prevent exposure to direct sunlight. Valves and hydrants shall be stored and protected from damage by freezing.

D. Pipe shall not be stacked higher than the limits recommended by the manufacturer. The bottom tier shall be kept off the ground on timbers, rails, or concrete.

670.2.03 Salvaged Material

A. Salvaged material shall be delivered to the main Macon Water Authority warehouse for inclusion as stock. The location and contact information are below:

Warehouse Address

951 5th Street

Macon, Georgia 31201

Contact

Mr. Paul Cumbuss

Office: 478-464-5664, Cell: 478-447-3736

B. Material to be salvaged is identified below:

a. Fire hydrant assemblies

b. Riser sections

c. Isolation gate valve at each fire hydrant

670.3 Construction Requirements

670.3.01 Personnel

A. General Provisions 101 through 150.

B. Construction and installation of all water utilities shall be performed by a Contractor prequalified/registered with GDOT.

C. All work specified in this section, except for water system service line installation shall be performed by a Contractor with a valid Utility Contractor's license issued by the State of Georgia. Water service line installation shall be performed by either a Utility Contractor licensed in the State of Georgia or by a Master Plumber licensed in the State of Georgia.

670.3.02 Equipment

A. Ensure all equipment used is in conformance with the requirements and standards set forth in the MWA Standards for Design and Construction Specifications, current published edition.

670.3.03 Preparation

General Provisions 101 through 150.

670.3.04 Fabrication

General Provisions 101 through 150.

670.3.05 Construction

A. Finding Existing Underground Utilities and Obstructions

1. In accordance with Georgia Law, the Contractor shall call the Utility Protection Center, 811, to request utilities to be marked for all areas where construction activities are conducted.
2. Comply with Subsection 107.13 and Subsection 107.21.
3. According to the best information available to GDOT, all known water lines, sewer lines, gas lines, telephone conduits, drainage structures, etc. are shown on the Plans. However, to find such installations, use an electronic pipe and cable finder in locating existing installations or obstructions to the work.
4. When unforeseen conflicts require Plan changes, perform the work as altered according to Subsection 104.03 and Subsection 104.04.
5. Follow all Utility Owner customer notification requirements and obtain approval from the Utility Owner and GDOT Project Manager prior to disrupting any existing water services as required to install the water facilities shown on the Plans.

B. Jack and Bore

Comply with Section 615 for water main installations by jack and bore.

C. Directional Drilling

1. Install water mains and services by means of directional drilling at locations shown on the Plans or where approved by GDOT or Utility Owner. Provide submittals and follow all relevant procedures and requirements set forth in the MWA Standards for Design and Construction Specifications – Article I, Section 2.19.
2. The Contractor shall not initiate horizontal directional drilling until all submittals are received, reviewed, and accepted by GDOT and the Utility Owner, and all required permits are obtained.
3. The Contractor shall select drilling additives and fluid mixture proportions to ensure continuous circulation, bore stability, reduce drag on the pipe, and completely fill the annular space between the bore and the pipe to ensure stability and control settlement.
4. The Contractor shall submit contingency plans for remediation of potential problems that may be encountered during the drilling operations. The contingency plans shall address the observations that would lead to the discovery of the problem and the methods that would be used to mitigate the problem. Potential problems that shall be addressed include:

a. Loss of returns/loss of circulation of drilling fluid.
b. Encountering obstruction during pilot bore or reaming/pullback.
c. Drill pipe or product pipe cannot be advanced.
d. Deviations from design line and grade exceed allowable tolerances.
e. Drill pipe or product pipe broken off in borehole.
f. Product pipe collapse or excessive deformation occurs
g. Utility strike.
h. Hydrolock occurs or is suspected.
i. Excessive ground settlement or heave of ground surface or existing utilities.
j. Inadvertent returns / hydrofracture or surface spills resulting in drilling fluids entering water or reaching the surface.

5. Pipe damaged in directional drilling operations shall be removed and replaced at no additional expense to GDOT or the Utility Owner.
6. Voids developed or encountered during the installation operation shall be pressure grouted with a grout mix approved by GDOT.
7. Installation shall include a locatable conduit system, with identification markers on each side of GDOT right-of-way where applicable.Two (2) insulated 8 gauge solid copper tracers wire shall be attached to the leading end of the pipe pulling head and shall extend the full length of the installed pipe.
8. The location and alignment of the pilot drill progress shall be continuously monitored for compliance with the proposed installation alignment and for verification of the depth of the bore. Monitoring shall be accomplished by computer generated bore logs which map the bore path based on x, y, z coordinate information provided by the locating/tracking system. Readings or plots shall be obtained on every drill rod, and shall be provided to the Inspector on a daily basis. Deviations between the recorded and design bore path shall be calculated and reported on the daily log. If the deviations exceed tolerances specified elsewhere, such occurrences shall be reported immediately to GDOT. The Contractor shall undertake all necessary measures to correct deviations and return to design line and grade.
9. Upon completion of the directional drill the Contractor shall furnish GDOT and the Utility Owner an as-built drawing along with a report of the monitoring of the drilling fluids during the pilot hole and back reamed hole.
10. Drilling fluid pressures, flow rates, viscosity, and density shall be monitored and recorded by the Contractor. The pressures shall be monitored at the pump. These measurements shall be included in daily logs submitted to GDOT. The Contractor shall document modifications to the drilling fluids, by noting the types and quantities of drilling fluid additives and the dates and times when introduced. The reason for the addition of drilling fluid additives or other modifications shall be documented and reported.
11. Management and disposal of drilling fluids shall be the Contractor's responsibility. Excess drilling fluids shall be contained at the entry and exit points until recycled or removed from the site. All drilling fluids shall be disposed of in a manner acceptable to the appropriate local, state and federal regulations. The Contractor's work will be immediately suspended by GDOT whenever drilling fluids seep to the surface other than in the boring entrance or exit pit, or when a paved surface is displaced.
12. Surfaces damaged by the work shall be restored to their preconstruction conditions at no additional cost to GDOT or Utility Owner, and with no increase in contract time.
13. The following items shall be as shown on the Plans, unless otherwise approved in writing by GDOT:
    a. Entry / exit points
    b. Drill entry / exit angles
    c. Pilot bore path

1) Radius of Curvature
2) Entry / exit tolerances: Contractor shall be solely responsible for all work necessary to correct excessive deviations from line and grade, including re-drilling, redesigning connections, and acquiring additional easement, at no additional cost to GDOT or Utility Owner and without schedule extension.

14. The pilot bore shall be pre-reamed and reamed using equipment and methods submitted by the Contractor. The Contractor shall completely ream the bore to the final diameter prior to pullback.
15. Pullback: The pipe shall be installed by pulling it into the reamed bore path in a continuous operation, behind a final reaming tool selected by the Contractor. The pipe shall be isolated from excessive torsional and axial stresses by a swivel device with a pre-established breakaway tensile capacity that is lower than the allowable tensile strength of the pipe. The maximum pull (axial tension force) exerted on the pipelines shall be measured continuously and limited to the maximum allowed by the pipe manufacturer with an appropriate factor of safety so that the pipe or joints are not overstressed. The end of the pipe shall be closed during the pull back operation.
16. Pipelines shall be adequately supported during installation so as to prevent overstressing or buckling. The Contractor shall provide adequate support/rollers along the pipe layout area to support the required length of pipe for the bore. The pipe layout area shall be cleared of all large stones, construction debris, or other foreign objects that could damage the pipe during pullback. The Contractor shall monitor and inspect pipe rollers and method for suspending pipe at entry during the pullback operation to avoid damage to the pipe.
17. The end of the pipe shall be closed during the pull back operation.
18. Each length of pipe shall be inspected and cleaned as necessary to be free of debris immediately before joining.
19. The Contractor shall at all times handle the pipe in a manner that does not overstress or otherwise damage the pipe. Vertical and horizontal curves shall be limited so that wall stresses do not exceed 50% of yield stress for flexural bending of the pipe. If the pipe is buckled or otherwise damaged, the damaged section shall be removed and replaced by the Contractor at his expense. The Contractor shall take appropriate steps during pullback to ensure that the pipe and tracer wires will be installed without damage.
20. If necessary, the pipe shall have water added as it enters the bore to achieve neutral buoyancy and reduce pullback loads and to ensure that adequate internal pressure is maintained at all points to counter balance collapse pressures.
21. The Contractor shall cease pullback operations if the pipe is damaged and shall remove the pipe from the bore and repair the pipe using the manufacturer's recommended procedure or replace the damaged pipe before resuming installation.
22. Damage to the pipe resulting from manufacturer defects, installation, or grouting is the responsibility of the Contractor, including costs for replacement and labor and materials. To confirm no damage to the pipe, upon completion of pull back, the Contractor shall pull a sphere or pig through the entire length of the pipeline. The pig shall be one inch less in diameter than the internal diameter of the product pipe, capable of allowing water to pass through it, complete with a pulling cable on either side. If the pig or sphere cannot pass through the pipe, it shall be considered collapsed and damaged.
23. After the carrier pipe is completely pulled through the bore, a sufficient relaxation period as recommended by the pipe manufacturer shall be provided before the final pipe tie-in.
24. The Contractor shall conduct a final hydrostatic test of the installed pipeline. Final test shall be in accordance with these specifications. The Contractor shall repair any defects discovered during this test, and repeat until the pipe passes the test.

D. Excavating Trenches

1. The Contractor shall provide all necessary shoring and bracing materials as required to assure safe working conditions and to protect the excavations. The Contractor shall be required to fully comply with all applicable OSHA Excavation Safety Standards. No separate payment shall be made for any special procedure used in connection with the excavation.

2. Excavate trenches to the proper depth and width as follows:
   a. Trench to Grade: Excavated trench bottoms shall be firm, free from boulders, and conform to the established grade. Limit open trench excavation to a maximum of three 300 feet (90 m) ahead of completed backfill.
   b. Care shall be taken not to over excavate except where necessary to remove unstable material, irregularities, lumps, rock, and projections. Unnecessary over excavation shall be replaced at the Contractor's sole expense and in accordance with Subsection 670.3.05.
   c. Excavation carried below the established grade lines shown or established by the Utility Owner shall be backfilled according to Section 207 and Subsection 670.3.05. Use Class I or Class II Soils (defined in Section 810) and firmly compact the soil.
   d. Where the established grade of a trench is in rock, undercut the bottom of the trench by at least 6 inches (150 mm) beneath the pipe or conduit and the greater of 24 inches (600 mm) wider than the pipe/conduit (12 inches or 300 mm each side) or 42 inches (1050 mm) wide, then backfill and compact according to Subsection 670.3.05.
   e. Excavation in pavement and pavement patching shall be according to GA Standard No. 1401. Remove the pavement according to Section 444, except no separate payment shall be made for sawed joints.
   f. Dewatering: Remove all water from excavations and maintain the excavations free of water while construction therein is in progress. Provide dewatering equipment as necessary to conform to this requirement. Dewatering procedures must meet all state and local regulatory requirements.
3. Minimum Trench Depth
   a. Excavate trenches to provide at least 48 inches (1.2 m) cover depth directly above the pipe to the finished pavement surface, sidewalk, grass, etc. unless indicated otherwise on the Plans or by the Utility Owner and GDOT Project Manager. In order to avoid existing utilities, it may be necessary for the pipe to be laid shallower or deeper than the minimum cover specified. At such time the Contractor shall not be allowed extra compensation for additional excavation necessary for deeper installations.
   b. Side slopes of the trenches shall be as nearly vertical as practicable. Trenches in excess of 5 feet (1.5 m) deep shall either have the trench sides laid back to conform to OSHA requirements for trench safety, if such area is available within the limits of excavation, or, alternatively, trenches deeper than 5 feet (1.5 m) shall be excavated via trench box or shored and braced.
   c. If any part of a water main is to be placed in or under a new embankment, finish the embankment to at least a 2-foot plane above the outermost portion of the pipe barrel before excavating the trench.
4. Trench Width: Excavate trenches to uniform widths wide enough to allow proper installation of pipe, fittings, and other materials, a minimum of 6 inches (150 mm) and a maximum of 12 inches (300 mm) each side of the pipe or conduit.
5. Trench Bell Holes: Excavate bell holes deeply and widely enough to make joints and to allow the pipe barrel to rest firmly on the trench bottom.
6. Trench bottom: Excavate and shape trench bottoms to provide uniform bearing and support of pipes and conduits. Shape subgrade to provide continuous support of bells, joints, and barrels of pipes and for joints, fittings, and bodies of conduits/pipes. Remove projecting stones, tree roots, debris, and sharp objects along trench subgrade. Abrupt changes in grade of the trench bottom shall be avoided. Unless otherwise indicated in the Plans, trenches for water mains shall be graded as much as possible to avoid high and low points that necessitate air release valves.
7. Excavations may be completed and refilled either by hand or by machinery. Hand tool excavation shall be conducted where necessary to protect existing utilities and structures.
8. In the event that unsuitable material is encountered at or below the excavation depth specified or shown on the Plans, the Utility Owner and GDOT Project Manager shall be notified. Such material shall be removed and replaced with suitable material in accordance with Section 205 by the written request of the GDOT Manager.

E. Tapping Sleeve and Valve Assembly

1. When making connections under pressure, (i.e. when normal water service must be maintained), furnish and use a tapping sleeve and valve assembly or line stop fittings as indicated. Coordinate with Utility Owner 72 hours in advance for water service interruptions and temporary shut-offs. Evening or weekend work may be required to complete direct connections and tie-ins. Connect to existing mains as follows:
   a. Before opening new pipeline trenches, locate the various points of connection to be made into existing pipelines. If necessary, uncover pipelines for the Utility Owner and GDOT Project Coordinators to prescribe the connections and fittings needed.
   b. Connect to existing pipelines only to meet operating requirements. Cut existing lines only after obtaining the Utility Owner's permission.

F. Laying Water Mains and Appurtenances

1. Preparing and Handling Pipes
   a. Thoroughly clean the pipe and fittings before laying them. Keep them clean until accepted.
   b. Use suitable tools and equipment. Do not damage the pipe, especially the cement lining inside the pipe.
   c. Cut pipe in a manner to avoid damage to pipe or lining, leaving a smooth end at right angles to pipe axis. Smooth and bevel edges of cut pipe for push-on, gasket type joints.
   d. Bedding shall be provided as specified by the project plans or pipe manufacturer for the type of conditions encountered. Bedding typically consists of granular soil free of lumps, clods, cobbles, and frozen materials, and shall be graded to a firm-but-yielding surface without abrupt changes in bearing value. Unstable soils and rock ledges shall be undercut from the bedding zone and replaced with suitable material.
   e. Bed pipe on coarse granular material in flat bottom trench with entire pipe barrel bearing uniformly on coarse granular material, except for an approximately 18-inch (450 mm) gap at pipe balance point for sling removal. Hand excavate and backfill as required to provide uniform and continuous bearing and support for the pipe. Do not support pipe on hubs or end bells. Consolidate coarse granular material under and around pipe up to pipe centerline by tamping.
   f. Join pipe with bells facing direction in which laying operation is progressing. Lay pipe upgrade wherever line grade exceeds 10%.
   g. Carefully examine pipe for cracks and other defects and do not lay defective pipe. If pipe or castings appear to be cracked, broken, or defective after laying, remove and replace those sections.
2. Alignment and Gradient
   a. Pipe alignment and gradient shall conform to the Plans. Deflect pipe lines only where indicated on the Plans, within allowable horizontal and vertical deflection angles according to the manufacturer.
   b. Water mains shall be laid at least 10 feet (3 m) horizontally from any existing or proposed sanitary sewer, storm sewer or sewer manhole. The distance shall be measured edge-to-edge. When local conditions prevent a horizontal separation of 10 feet (3 m), the water main may, on a case-by-case basis, be laid closer to a sewer provided the water main is laid in a separate trench or on an undisturbed earth shelf located on one side of the sewer at such an elevation that the bottom of the water main is at least 18 inches (450 mm) above the top of the sewer.
   c. Maintain a vertical separation of at least 18 inches (450 mm) between the crown of sanitary sewers and the invert of existing or proposed water mains with the sewer located below the water main. Where a vertical separation of 18 inches (450 mm) cannot be provided, and the water main cannot be relocated to provide adequate clearance, center one full length of water main over the sewer so that both joints of the water main will be as far from the sewer as possible.
3. Special Requirements for Laying Water Mains
   a. Excavate, clean, lay, joint, and backfill progressively and uniformly according to these requirements:

1) Never leave pipe in the trench overnight without completely jointing and capping.
2) Do not leave completed pipeline exposed in the trench. Backfill and compact the trench as soon as possible after laying, jointing, and testing are complete.
3) At the close of work each day and when laying pipe, close the exposed end of the pipeline in the trench with an approved wood or metal head or barrier.
4) If necessary to cover the end of an incomplete pipeline with backfill, close the end of the pipe with a satisfactory cap or plug.

G. Installing Water Mains by Open Cut

1. Use the following flexible joints for connections inside the roadway shoulders or curbs and gutters:
   a. Mechanical Joints:
      1) When using mechanical joints, thoroughly wash bell sockets, spigots, gland, gasket, nuts, and bolts with soapy water before assembly. Keep these parts wet until the jointing operation is complete.
      2) Tighten nuts within the torque range recommended by the manufacturer. Check the tightening tolerance with a torque wrench.
      3) If effective sealing is not attained at the maximum recommended torque, disassemble, thoroughly clean, then reassemble the joint.
      4) Do not overstress bolts to compensate for improper installation or defective parts.
   b. Push-On Type Joints
      1) Use push-on joints made according to the manufacturer's recommendations.
      2) Install ductile iron pipe in accordance with AWWA C600.
2. Restraints for pipe joints and fittings shall be provided as specified and as shown on the Plans. Restraints shall be installed per manufacturer's recommendations.
3. Buried ductile iron pipe and fittings shall be polyethylene encased as specified and as indicated on the Plans. Polyethylene encasement tubing shall be secured with polyethylene tape and installed in accordance with ANSI/AWWA C105/A21.5.
4. Unless otherwise specified by the MWA Standards for Design and Construction Specifications –Article I, Section 2.04 B (1), provide pipe detection wire on all non-metallic pipe systems. Tape the tracer wire to the top center of the pipe at intervals which prevent wire displacement during backfilling operations. Stub tracer wire up 6 inches (150 mm) above finished grade at all valves and fire hydrants. For splices, use direct bury kits. After backfilling is complete, test electrical continuity of each tracer wire segment and provide test results to Utility Owner and GDOT Project Manager.
5. Install continuous underground warning tape during backfilling of trench for underground water distribution piping. Install 12 inches (300 mm) below finished grade, or 6 inches (150 mm) below subgrade under pavements and walkways, and buried directly over piping.
6. Use pipe cutters when cutting pipe or special castings. Do not use a hammer, chisel, or a cutting torch.
7. Locations where water mains do not meet minimum depth of cover requirements shall include a steel casing or concrete encasement installed per the MWA Standards for Design and Construction Specifications –Article I, Section 1.16 C.
8. Isolation Valves on Water Mains: Install and joint gate valves as specified in Subsection 670.2.01in accordance with AWWA C600. Include the valve box and valve marker where required.
11. Pressure reducing/sustaining valves of the size and type indicated shall be installed as shown on the Plans per manufacturer's recommendations and the MWA Standards for Design and Construction Specifications – Article I, Section 1.04 C(3)e.

12. Fire Hydrants: Install and joint hydrants as specified in Subsection 670.2.01 and in accordance with AWWA C600. Include required vertical extension sections. Also, include pipe strap installation, restraints, crushed stone drain, and backfill according to the Plans and this Section. Spacing of fire hydrants shall be as indicated in the MWA Standards for Design and Construction Specifications – Article I, Section 1.04 F.
13. Concrete Thrust Collars and Thrust Blocks: If required, furnish materials and install thrust collars or concrete blocking according to Subsection 670.2.01. Form and pour concrete thrust collars or blocks in accordance with the Plans and the MWA Standards for Design and Construction Specifications – Article I, Section 1.12 C. Blocking shall be poured against undisturbed earth and all forms shall be removed before backfilling.
14. Backfilling
    a. Furnish equipment, labor, and when necessary material required for backfilling the pipe line trenches according to Section 207, and as follows:
        1) When testing for visual leaks in open trenches, do not backfill until testing is complete and leaks are eliminated.
        2) When retaining pavement adjacent to trenches, replace removed pavement with the same or better material when approved in accordance with the appropriate Section for the pavement type replaced.
        3) Place backfill on subgrades free of mud, frost, snow, or ice.
        4) Place and compact bedding course on trench bottoms and where indicated. Shape the bedding course to provide continuous support for bells, joints, and barrels of pipes and for joints, fittings, and bodies of conduits/pipes.
        5) Backfill shall include Class I or Class II Soils as defined in Section 810 or suitable material that conforms to the MWA Standards for Design and Construction Specifications – Article I, Section 1.13.
        6) Backfill shall be placed in two stages: first, side fill to a height of 12 inches (300 mm) above the top of pipe; second, overfill to former surface grade. Side fill shall consist of granular material laid in 6-inch (150 mm) layers each consolidated by mechanical tamping and controlled addition of moisture, to a density of 95% as determined by as determined by the Standard Proctor test (AASHTO T-99 Method D) or GDT 67. Overfill shall be layered and consolidated to match the entrenched material in cohesion and compaction. The top 12 inches (300 mm) shall be compacted to 100% of specified density. Consolidation by saturation or ponding shall not be permitted.
        7) Soil Moisture Control: Uniformly moisten and aerate subgrade and each subsequent fill or backfill soil layer before compaction to within 2% of optimum moisture content. Remove and replace, or scarify and air dry, otherwise satisfactory soil material that exceeds optimum moisture content by 2% and is too wet to compact to specified dry unit weight.
        8) Initial backfill shall be carefully compacted under pipe haunches and evenly up on both sides and along the full length of piping or conduit to avoid damage or displacement of piping or conduit. Place and compact fill and backfill of satisfactory soil to final subgrade elevation. Backfill voids with satisfactory soil while removing shoring and bracing and/or trench boxes.
        9) After backfilling, maintain temporary surface restoration per GA Standard No. 1401 until permanent repaving is complete. No separate payment shall be made for replaced pavement.
15. Disinfection of Water Mains
    a. New and existing pipelines and appurtenances shall be disinfected before placing into service. Disinfection can be conducted in conjunction with the pressure test.
    b. Before the main is chlorinated, it shall be filled to eliminate air pockets and shall be flushed to remove particulates.
    c. During disinfection of the water mains, an appropriate cross-connection control device, consistent with the degree of hazard, shall be provided for backflow protection of the active distribution system.

d. Chlorination: Sterilize using only potable water with calcium hypochlorite (HTH), 1% chlorine solution, or other products acceptable to the Utility Owner and GDOT Project Manager and Department of Public Health. Comply with AWWA C651 including Section 9 procedures on final connections to existing mains.

1) The chlorine solution used for disinfection of water mains shall have a free chlorine residual concentration not less than 25 mg/L or in accordance with the MWA Standards for Design and Construction Specifications – Article I, Section 1.18.

2) Add enough disinfectant to provide a chlorine residual of not less than 10 parts per million (ppm) in 24 hours or as required in accordance with the latest edition of AWWA Standard C651. All valves and hydrants shall be operated to ensure disinfection of the appurtenances.

3) At the end of 24 hours, check the chlorine residual. If it is less than 10 ppm, add additional chlorine and check the line again after 24 hours.

e. After the applicable retention period, the chlorinated water must not be disposed in a manner that will harm the environment. Neutralizing chemicals, such as Sulfur Dioxide, Sodium Bisulfite, Sodium Sulfite or Sodium Thiosulfate can be used to neutralize the chlorine residual remaining in the water to be wasted.

f. After sterilization, flush the line with potable water until the chlorine residual is equal to the existing system.

1) After final flushing and before the water main is placed into service, water samples shall be collected from the main and tested for microbiological quality in accordance with the Georgia Rules for Safe Drinking Water. Samples shall be taken in the presence of the Utility Owner and GDOT Project Manager.

2) When test results are not satisfactory, the pipeline shall be flushed and disinfected again as necessary without additional compensation until satisfactory results are obtained.

H. Laying Service Lines and Appurtenances

1. Except as modified in this Section, construct and install service connection assemblies and lines according to the Plans and the requirements for laying water mains. Install service lines at locations shown on the Plans or where designated by the Utility Owner and GDOT Project Manager.
2. Install new pipe from the water main to the final location of the meter or to points designated by the Utility Owner and GDOT Project Manager to connect with existing or future service lines on abutting property.
3. No water service connections shall be performed until the main is tested and disinfected. Water service lines shall be tested and disinfected prior to connection to the main.
4. If required, install water service line inside casing pipe according to the Plans.
5. At roads, paved drives, retaining walls, and other paved areas, install service tubing or casing pipe by pushing, pulling, or augering techniques. At all other locations, install service tubing by trenching and backfilling unless directed otherwise by GDOT.
6. Service line installation includes all connections using saddles, unions, valves, fittings, corporation stops, curb stops, casing, and any and all appurtenant work required to provide a complete water service connection.
7. Excavate for service lines as specified in Subsection 670.3.05 with the following exceptions:
   a. Ensure that trenches under pavements and across driveways are deep enough to provide at least 48 inches of cover, unless otherwise directed by the Utility Owner and GDOT Project Manager.
   b. At other areas, trench depth and backfill cover may be adjusted at the discretion of the Utility Owner and GDOT Project Manager to provide at least 18 inches of cover.
8. Backfill service lines as specified in Subsection 670.3.05.
9. All service lines, fittings, and appurtenances necessary for the water service connections shall be installed and backfilled in accordance with the manufacturer's recommendations.

10. If any galvanized water service line between the main and the meter, not otherwise accounted for, is discovered during construction, the Contractor shall remove the galvanized line and replace it with a copper line as per the Macon Water Authority standard.

I. Cutting and Capping Existing Water Mains

1. Disconnect by sawing or cutting and removing a segment of existing pipe where cutting and capping or plugging is shown on the Plans or directed by the Utility Owner or GDOT Project Manager. Provide a watertight pipe cap or plug and restraint mechanism to seal off existing mains indicated to remain in service. If water main is to be abandoned or removed and not specified to be grout filled, seal ends with a pipe cap or plug or with a masonry plug and minimum 6-inch cover of concrete on all sides around the end of the pipe.
2. The Contractor shall be responsible for uncovering and verifying the size and material of the existing main to be capped or plugged.
3. Abandoned water mains greater than 6-inch shall be filled with flowable fill per Section 600 at the locations indicated on the Plans. Air release valves and water service connections along the abandoned main shall be plugged prior to grouting. Prior to backfilling, the bottom of the manhole shall be broken up in such a manner that water will readily pass through. The top portion of the manhole structure shall be removed in order to establish a minimum of 3 feet cover from subgrade or finished grade when not under the pavement and filled with sand or suitable backfill.
4. Water mains shall be flushed prior to placement of flowable fill. Use concrete or grout pumps capable of continuous delivery at planned placement rate with sufficient pressure to overcome friction and fill the sewer main.

J. Relocating, Adjusting, Abandonment and Removing

1. Fire Hydrant Assemblies
   a. Remove all fire hydrant assemblies including valve and valve boxes that are disconnected from the active system.
   b. Protect items during removal and relocation.
   c. Disconnect each joint before removing items from the trench.
   d. All removed fire hydrant assemblies, including valves, shall be delivered to the MWA's warehouse.
   e. Consider valve boxes part of the valve assembly and remove them intact with the valve.
2. Water Valves and Boxes
   a. Adjust or remove water valves and valve boxes according to the Plans or as designated by the Utility Owner and GDOT Project Manager.
   b. Protect items during adjustment or removal. Replace lost or damaged Items at no expense to GDOT or the Utility Owner.
   c. Disconnect each joint before removing items from the trench.
   d. Test for leakage, adjust, and retest until no leaks appear.
   e. Backfill as specified in Subsection 670.3.05.
   f. Consider valve boxes part of the valve assembly and remove them intact with the valve.
3. Existing Water Meters and Boxes
   a. Relocate existing water meters and boxes according to the Plans or the Utility Owner and GDOT Project Manager.
   b. To relocate water meters, remove the existing meter, associated backflow preventer, and box and replace with a short section of pipe.
   c. Inspect along with the Utility Owner and GDOT Project Manager each meter and backflow preventer before removal to determine the condition of each.
   d. Unless specified otherwise in the Plans, new water meters and backflow preventers shall be furnished by the Contractor as necessary if these devices are deemed unsuitable for reuse. Contractor shall provide new water meter boxes if deemed unsuitable for reuse. The Contractor shall coordinate delivery of the water meters and backflow preventers to correspond to construction operations to minimize service interruptions.

e. Relocation of water meters and boxes shall include without additional compensation, required pipe, unions and appurtenances, adapter fittings, necessary storage protection, and installation of meter, backflow preventer, meter box, and curb stop in the existing service line.

4. Existing Water Service Lines
   a. Water lines shall be adjusted to grade by excavating the existing lines, lowering or raising the lines, and backfilling according to the Plans or the Utility Owner and GDOT Project Manager.
   b. Furnish new materials or fittings required for the adjustment without additional compensation.
   c. Change connections at the main that result from this work.
   d. Repair leaks and damage caused by the operations at no expense to GDOT.
   e. When retaining a water meter where an existing service line is to be adjusted, adjust the existing meter and box to the proper grade without additional compensation.
5. Other Water Appurtenances
   a. Relocate, adjust to grade, or remove water main appurtenances including but not limited to air release valves, backflow preventers, pressure reducing/sustaining valves according to the Plans or as designated by the Utility Owner and GDOT Project Manager.
6. Utility related items identified on the Plans to be salvaged are the property of the Utility Owner. Contractor shall coordinate with Utility Owner on delivery of salvaged materials. Should the Utility Owner choose to not accept these materials they shall be removed from the project site as soon as practical.
7. Removal of Water Main

   Water mains to be removed and disposed of offsite. Backfill trenches and other excavations dug for removing in accordance with Section 610 - Sub-Section 610.3.05 G. Backfilling.
8. Abandon Water Main

   Water mains to be abandoned in excess of 6 inches in diameter shall be filled in accordance with section 600 – "Flowable Fill".

K. Aerial Crossings

1. Support must be provided for all joints in pipes utilized for aerial crossings. The supports must be installed to prevent frost heave, overturning, and settlement. Precautions against freezing, such as insulation, shall be provided.
2. When the aerial crossing is accomplished by attachment to a bridge or drainage structure, the crossing shall meet all requirements of the agencies that own or have jurisdiction over such structures.
3. Aerial installations shall be installed to avoid or minimize stream blockage during normal high water events.
4. Underground valves shall be provided at both ends of the aerial crossing so that the section can be isolated for testing or repair. The valves shall be restrained, easily accessible, and not subject to flooding.
5. Appropriate guards shall be installed at both ends of the aerial crossing to prevent public access to the pipe.

670.3.06 Quality Acceptance

A. Materials Certification

For certain products, assemblies and materials, not on GDOT QPL List, and in lieu of normal sampling and testing procedures by the Contractor, the Utility Owner, and GDOT may accept from the Contractor the manufacturer's certification with respect to the product involved under the conditions set forth in the following paragraphs:

1. Material certifications shall be provided to GDOT Project Manager, who shall distribute to the Utility Owner. Material certifications shall be approved by GDOT and the Utility Owner prior to construction. The certification shall state/specify that the named product conforms to these specifications and requirements of the Utility Owner and GDOT, and representative samples thereof have been sampled and tested as specified.

2. The certification shall either:
   a. Be accompanied by a certified copy of the test results, or
   b. Certify such test results are on file with the manufacturer and will be furnished to the Utility Owner and GDOT Project Coordinators upon demand.
3. The certification shall state/specify the name and address of the manufacturer and the testing agency and the date of tests; and sets forth the means of identification which shall permit field determination of the product delivered to the project as being the product covered by the certification.
4. Submit certification in triplicate with two copies of the covered product to the GDOT Project Coordinator, and one copy sent to GDOT's State Materials and Research Engineer at 15 Kennedy Drive, Forest Park, Georgia. The certification shall specify the project number and contract ID number. No certificate shall be required for Portland cement when furnished from a manufacturer approved by GDOT.
5. GDOT or the Utility Owner will not be responsible for any costs of certification or for any costs of the sampling and testing of products in connection therewith.
6. GDOT and the Utility Owner reserve the right to require samples and test products for compliance with pertinent requirements irrespective of prior certification of the products by the manufacturer. Any materials that fail to meet specification requirements will be rejected.
7. In accordance with the BUY AMERICA requirements of the Federal regulations (23 U.S.C. 313 and 23 CFR 635.410) all manufacturing processes for steel and iron products or predominantly of steel or iron (at least 90% steel or iron content) furnished for permanent incorporation into the work on this project shall occur in the United States. The only exception to this requirement is the production of pig iron and the processing, pelletizing and reduction of iron ore, which may occur in another country. Other than these exceptions, all melting, rolling, extruding, machining, bending, grinding, drilling, coating, etc. must occur in the United States.
   a. Products of steel include, but are not limited to, such products as structural steel piles, reinforcing steel, structural plate, steel culverts, guardrail steel supports for signs, signals and luminaires, and cable wire/strand. Products of iron include, but are not limited to, such products as cast iron frames and grates and ductile iron pipe. Coatings include, but are not limited to, the applications of epoxy, galvanizing and paint. The coating material is not limited to this clause, only the application process.
   b. Records to be provided by the Contractor for this certification shall include a signed mill test report and a signed certification by each supplier, distributor, fabricator, and manufacturer that has handled the steel or iron product affirming that every process, including the application of a coating, performed on the steel or iron product has been carried out in the United States of America, except as allowed by this Section. The lack of these certifications will be justification for rejection of the steel and/or iron product or nonpayment of the work.
   c. The requirements of said law and regulations do not prevent the use of miscellaneous steel or iron components, subcomponents and hardware necessary to encase, assemble and construct the above products, manufactured products that are not predominantly steel or iron or a minimal use of foreign steel and iron materials if the cost of such materials used does not exceed one-tenth of one percent (0.1%) of the total contract price or $2,500.00, whichever is greater.

B. Flushing

1. Prior to testing, water mains shall be cleaned and flushed to remove all sand and foreign matter. Water used for filling and cleaning shall be from an approved potable water source. Sufficient flushing water shall be introduced into the mains to produce a scouring velocity of not less than 3.5 feet per second to resuspend the solids, and this rate of flow shall be continued until the discharge is clear and no evidence of silt or foreign matter is visible. The Contractor shall dispose of all water used for flushing without causing a nuisance or property damage.

2. In the event that the Contractor cannot obtain the flushing velocity, a poly-pig swab may be used to clean the pipeline. The Contractor shall submit pigging plan to the Utility Owner and GDOT for review. The plan shall include type of pig material, water flow rate, discharge points, poly-pig detector and retrieval options.

C. Hydrostatic Testing of Water Mains

1. When the Utility Owner and GDOT Project Manager approve a section of pipe for testing, the Contractor shall furnish the materials, equipment, and labor to conduct the pressure and leakage tests. Use a test pump, pressure gauge, and a means of measuring the water necessary to maintain the required pressure during the prescribed testing time. All pressure and leakage testing shall be done in the presence of the Utility Owner and GDOT Project Coordinators as a condition precedent to the approval and acceptance of the system. All pipes shall have been thoroughly flushed prior to testing. Simultaneous or separate pressure and leakage tests may be performed.
2. All water for testing and flushing shall be potable water provided by the Contractor, at no cost to the Utility Owner or GDOT, from an approved source. Flow velocity during line filling shall not exceed 2 feet (0.6 m) per second (fps).
3. Testing Requirements
   a. Water mains shall be tested in sections between valves, thereby, testing each valve for secure closure. Testing shall be done immediately after installation and backfilling has been completed.
   b. The mains shall be tested in accordance with the latest revision of AWWA C600 for ductile iron under an average hydrostatic pressure of the greater of 1.5 times the maximum working pressure or 150 psi as measured at the lowest point in the system for a minimum of 2 hours. Pressure shall be maintained until all sections under testing have been checked for evidence of leakage.
   c. While the system is being filled with water, air shall be carefully and completely exhausted. If permanent air vents are not located at all high points, the Contractor shall install corporation stops or fittings and valves at such points at no additional expense to the Utility so the air can be expelled as the pipe system is slowly filled.
   d. Makeup water shall be added, as required, to maintain the pressure within 5 psi of the test pressure. The quantity used shall be measured by pumping from a calibrated container. The maximum amount of makeup water allowed shall be determined by the following formula:

$$L = \frac{SD\ P^{0.5}}{148{,}000}$$

in which,

L = Allowable Leakage in gallons per hour

S = Length of pipe being tested in feet

D = Nominal pipe diameter in inches

P = Average test pressure during the test in psi gauge

   e. Visible leaks shall be corrected regardless of total leakage shown by test. All pipe fittings and other materials found to be defective under test shall be removed and replaced. Lines which fail to meet test requirements shall be repaired and retested as necessary until test requirements are met. No additional compensation shall be made for repairs or retesting.

670.3.07 Contractor Warranty and Maintenance

General Provisions 101 through 150.

670.4 Measurement

Incidentals including excavation, rock removal, backfilling, disinfection, testing, temporary water connections, pavement removal, pavement replacement, and other incidentals required for the installation of water distribution items are not measured for separate payment and shall be included in the applicable Pay Items below. Water mains, service lines, and other associated Items of work in this Specification, complete, in place, and accepted, are measured for payment as follows:

A. Ductile Iron Water Mains

Ductile iron water mains shall be measured in linear feet for each size, thickness class, and type (restrained, non-restrained) installed. Measurement shall be horizontally above the centerline of the pipe and shall include the length of valves and fittings.

B. Ductile Iron Fittings

Ductile iron fittings are considered subsidiary to the water line in which they are used and are not measured for separate payment. This Item includes, but is not limited to, wyes, tees, bends, crosses, sleeves, plugs and caps, and reducers.

C. Restrained Joints

Joint restraints used with the installation of ductile iron pipe are considered subsidiary to the water line in which they are used and are not measured for separate payment.

D. Insertion Valves

Insertion valves shall be measured on an individual basis for each size valve and box assembly acceptably installed.

E. Fire Hydrant Assemblies

Fire hydrant assemblies shall be measured on an individual basis on the number of hydrants acceptably installed.

F. Concrete Thrust Blocks

Concrete thrust blocking installed shall not be measured separately. Include the cost of the work in the bid price for the appropriate item. The concrete thrust block applies to all bend angles, tees, and other fittings in order to provide required thrust restraint.

G. Water Service Lines

Service lines shall be measured in linear feet (meters) for each size of service pipe installed. Measurements are made from end to end and from center of lines to ends of branches and include tapping saddle, sleeve, valves, service connection assemblies, sleeves, adapters, and fittings.

H. Steel Casing

Steel casing pipe of the wall thickness and diameter specified shall be measured by the linear foot for each size and thickness of steel casing pipe installed. Measurement shall be horizontally above the centerline of the casing.

I. Cutting and Capping Water Main

Cutting and capping of water mains shall not be measured separately. Cut and Cap Water Main shall be included in the contract price for Flowable Fill

J. Removal of Water Mains

Removal of Water Main shall be measured per linear foot for each size pipe actually removed in accordance to Section 610. Measurement shall be horizontally above the centerline of the pipe removed and shall include the length of valves and fittings.

K. Flowable Fill

Flowable fill shall be measured as indicted in Section 600 per cubic yard of flowable fill acceptably installed.

L. Abandon Water Main

Abandon Water Main will not be measured separately. Abandon Water Main shall be included in the contract price for Flowable Fill

M. Polyethylene Encasement

Polyethylene Encasement will not be measured separately. Polyethylene Encasement shall be included in the contract price for Ductile Iron Water Main

N. Bridge Hangers

Hangers, brackets, rollers, fasteners and other miscellaneous appurtenances required for installing water mains on bridges will be considered incidental to the water main installation and will not be measured separately for payment.

O. Adjustment of Valve Boxes

Existing valve boxes adjusted to grade in their original locations shall be measured on an individual basis on the number of each valve box acceptably adjusted in accordance to Section 611.

P. Relocation of Existing Water Meter and Box

Relocation of existing water meter and box shall be measured on an individual basis on the number of each acceptably relocated water meter and box including final adjustment of boxes.

670.4.01 Limits

General Provisions 101 through 150.

670.5 Payment

The Contract Unit Price for each Item, complete and accepted, shall include all costs incidental to the construction of the Item according to the Plans and as specified in this Section. The unit prices bid shall include due allowance for the salvage value of all materials removed from existing or temporary lines and not installed in the completed work. All such surplus items shall become the property of the Contractor unless such surplus items are specified to be salvaged. Payment for any Item listed below is full compensation for the Item or Items complete in place.

A. Ductile Iron Water Mains

Ductile iron mains shall be paid for at the unit price per linear foot for each diameter pipe installed and shall cover the cost for all materials, transportation, labor, equipment, excavation, sheeting and shoring, installation of pipe, joints and jointing materials, anchoring, warning tape, polyethylene encasement, protection of existing utilities, connections to existing water mains, sampling taps, temporary blow-offs, flushing, cleaning, pigging, chlorine for disinfection, disinfection, backfilling, backfill materials, disposal of unsuitable backfill material, tamping, testing, densities, utility crossings, dewatering, trench stabilization, clean-up, restoration and all work and materials necessary to place the pipe into service.

B. Ductile Iron Fittings

Ductile iron fittings are considered subsidiary to the water line in which they are used and are not measured for separate payment as outlined in the manufacturers' catalogues and shall cover the cost for all materials, transportation, labor, equipment, excavation, sheeting and shoring, installation of fittings, joints and jointing materials, anchoring, warning tape, polyethylene encasement, protection of existing utilities, flushing, chlorine for disinfection, disinfection, backfilling, backfill materials, disposal of unsuitable backfill material, tamping, testing, densities, utility crossings, dewatering, trench stabilization, clean-up, restoration, all other related and necessary materials, work and equipment required to install a complete and operable pipeline fitting. This Item includes, but is not limited to, wyes, tees, bends, crosses, sleeves, plugs and caps, couplings, and reducers.

C. Restrained Joints

Restrained joints are considered subsidiary to the water line in which they are used and are not measured for separate payment as outlined in the manufacturers' catalogues and shall cover the cost for all materials, transportation, labor, equipment, excavation, sheeting, shoring, installation of the restraint device, polyethylene encasement, protection of existing utilities, backfilling, backfill material, disposal of unsuitable backfill materials, tamping, testing, densities, utility crossings, dewatering, trench stabilization, clean-up, restoration, and all work and materials necessary to install the restrained joint.

D. Fire Hydrant Assembly

Fire hydrant assemblies shall be paid for at the unit price per each hydrant installed and shall cover the cost for all materials, transportation, labor, equipment, excavation, sheeting and shoring, installation of the fire hydrant assemblies (all configurations), vertical extensions, tapping sleeve, valve, gate valve w/box, hydrant lead piping, joint connections, fittings, tees, restraints, crushed stone drain, polyethylene encasement, protection of existing utilities, valve box, concrete pad or collar, valve identification disc, valve marker, valve tag, chlorine for disinfection, disinfection, backfilling, backfill material, disposal of unsuitable backfill materials, tamping, testing, densities, utility crossings, dewatering, trench stabilization, clean-up, restoration, and all work and materials necessary to install the fire hydrant assembly and place it in service.

E. Concrete Thrust Blocks

Concrete thrust blocks are considered subsidiary to the water line in which they are used and are not measured for separate payment and shall cover the cost of all materials, transportation, labor, equipment, excavation, sheeting and shoring, concrete, forming, reinforcement, protection of existing utilities, backfilling, backfill material, disposal of unsuitable backfill materials, tamping, testing, densities, dewatering, trench stabilization, clean-up, restoration, and all work and materials necessary to install a complete thrust block.

F. Water Service Lines

Water service lines shall be paid for at the unit price per linear feet (meters) of the size service line installed and shall cover the cost for all materials, transportation, labor, equipment, excavation, sheeting and shoring, installation of water service line, tracer wire, connection to tapping saddle, sleeve, corporation stops, fittings, curb stops, casing pipe, plugging abandoned water service connection, removal of abandoned water service line, protection of existing utilities, locating and connection to existing or new water main, chlorine for disinfection, disinfection, sampling points, backfilling, backfill materials, disposal of unsuitable backfill material, tamping, testing, densities, utility crossings, dewatering, trench stabilization, clean-up, restoration, and all work and materials necessary to place the water service line into service. Water meter and box shall be paid for under a separate Pay Item.

G. Steel Casing

Steel casing pipe shall be paid for at the unit price per linear foot according to the diameter and thickness of the steel casing installed and shall cover the cost for all materials, transportation, labor, equipment, excavation, sheeting and shoring, protection of existing utilities, steel casing pipe, skid, steel straps, coatings, casing spacers, end seals, boring and jacking pits, backfilling, backfill materials, disposal of unsuitable backfill material, tamping, testing, densities, dewatering, trench stabilization, clean-up, restoration, and all work and materials necessary to install the steel casing except where such items are shown to be paid for under a separate Item. The carrier pipe shall be paid from other applicable Pay Item.

H. Cutting and Capping Existing Water Main

Cutting and capping of existing water mains are considered subsidiary to the water mains which are abandoned and shall be included in the unit price for flowable fill and shall cover all materials, transportation, labor, equipment, excavation, sheeting and shoring, protection of existing utilities, backfilling, backfill material, disposal of unsuitable backfill materials, tamping, testing, densities, dewatering, trench stabilization, clean-up, restoration, and all work and materials

necessary to cut and plug existing water mains, except where such items are shown to be paid for under a separate Pay Item.

I. Removal of Water Main

Removal of water mains in conflict with the proposed construction items shall be paid for at the unit price per linear foot for each identified line size removed shall cover the cost for all materials, transportation, labor, equipment, excavation, sheeting and shoring, protection of existing utilities, backfilling, backfill material, disposal of unsuitable backfill materials, tamping, testing, densities, dewatering, trench stabilization, clean-up, bypass piping (as required), restoration, and all work and materials necessary to locate, remove and dispose of the pipe and associated appurtenances. Items to be removed due to conflict with proposed construction items may include fittings, isolation valves, valve boxes, steel casings, casing spacers, water service lines, water meter boxes, thrust blocks, concrete, and other items whether shown on the plans or not.

J. Flowable Fill

Flowable fill shall be measured as indicted in Section 600 per cubic yard of flowable fill acceptably installed.

K. Abandon Water Main

Abandon Water Main will not be measured separately for payment. Abandon Water Main shall be included in the contract price for Flowable Fill

L. Polyethylene Encasement

Polyethylene Encasement will not be measured separately. Polyethylene Encasement shall be included in the contract price for Ductile Iron Water Main

M. Adjustment of Valve Boxes

Existing valve boxes adjusted to grade in their original locations shall be paid for at the unit price per each and shall cover the cost for all materials, transportation, labor, equipment, saw cutting, excavation, concrete pad or collar, protection of existing utilities, leak detection, tamping, testing, densities, dewatering, clean-up, restoration, and all work and materials necessary to adjust the valve box to grade in its original location.

N. Relocation of Water Meter and Box

Relocation of existing water meter and boxes shall be paid for at the unit price of each water meter and box relocated and shall cover the cost of all materials, transportation, labor, equipment, excavation, sheeting and shoring, removal of existing water meter and box, installation at another location, adjustment to final grade, protection of existing utilities, chlorine for disinfection, disinfection, backfilling, backfill material, disposal of unsuitable backfill materials, tamping, testing, densities, utility crossings, dewatering, trench stabilization, clean-up, restoration, and all work and materials necessary to relocate the water meter and box except where such items are shown to be paid for under a separate Item. The Contractor may furnish a new water meter box at no additional cost to the Utility Owner or GDOT. The Contractor shall replace any water meter box broken during construction at no additional cost to the Utility Owner or GDOT. The new service line from the main to the relocated meter shall be paid for under a separate Pay Item.

Payment will be made under:

Item No. 600	Flowable Fill	Per cubic yard
Item No. 610	Remove Water Main_____ in	Per linear foot
Item No. 611	Adjust Water Meter Box to Grade	Per each
Item No. 611	Adjust Water Valve Box to Grade	Per each

Item No. 670	Water Main_____ in	Per linear foot
Item No. 670	Water Service Line_____ in	Per linear foot
Item No. 670	Insertion Valve_____ in	Per each
Item No. 670	Fire Hydrant Assembly - Complete	Per each
Item No. 670	Steel casing_____ in	Per linear foot
Item No. 670	Relocate Existing Water Meter Including Box	Per each

670.5.01 Adjustments

General Provisions 101 through 150.

August 15, 2013
Revised May 16, 2014
Revised July 29, 2015
Revised May 9, 2016
Revised July 29, 2016
Revised August 22, 2016
April 12, 2017

DEPARTMENT OF TRANSPORTATION

STATE OF GEORGIA

SPECIAL PROVISION

PROJECT NO: STP00-3223-00(004), Bibb County

PI NO: 351090

Section 670—Water Distribution System

Delete Section 670 and substitute the following:

670.1 General Description

This work consists of furnishing materials, labor, tools, equipment, and other items necessary for installing, removing, abandoning, relocating, and adjusting water distribution systems according to the Plans and Specifications.

670.1.01 Definitions

A. General Provisions 101 through 150

B. Whenever the terms "MWA" or "Authority," are used in this Special Provision and its related documents, it shall be understood to mean Macon Water Authority its subsidiaries, successors and/or assigns, hereafter referred to as Utility Owner.

C. The term "Project Manager" shall mean the authorized individual having the authority to give instructions pertaining to the work and to approve or reject the work. The "Project Manager" shall not however be authorized to revoke, alter, enlarge, relax, or release any requirements of the Contract, Plans, and Specifications, nor shall they act as an agent for the Contractor. All Contract items pertaining to the Utility Owner shall be coordinated with the Georgia Department of Transportation's (GDOT) Project Manager and the Utility Owner.

670.1.02 Related References

A. Standard Specifications

Section 104—Scope of Work

Section 107—Legal Regulations and Responsibility to the Public

Section 108—Prosecution and Progress

Section 205—Roadway Excavation

Section 207—Excavation and Backfill for Minor Structures

Section 210—Grading Complete

Section 400—Hot Mix Asphaltic Concrete Construction

Section 444—Sawed Joints in Existing Pavements

Section 500—Concrete Structures

Section 600—Controlled Low Strength Flowable Fill

Section 611—Relaying, Reconstructing or Adjusting to Grade of Miscellaneous Roadway Structures

Section 615—Jacking or Boring Pipe

Section 810—Roadway Materials

B. Related Documents

1. General Provisions 101 through 150.
2. All products supplied and all work performed shall be in accordance the MWA Standards For Design and Construction Specifications, applicable standards from American Society for Testing and Material (ASTM), American Water Works Association (AWWA), American National Standards Institute (ANSI), GDOT Utility Accommodation Policy and Standards, and the Georgia Environmental Protection Division (EPD) Minimum Standards for Public Water Systems. Latest revisions of all standards shall apply.

670.1.03 Submittals

A. General Provisions 101 through 150.

B. Refer to the MWA Standards for Design and Construction Specifications – Article I, current published edition, for water utility submittal requirements. Copies of all submittals and documentation shall be submitted to GDOT, who shall distribute to the Utility Owner. Submittals will be approved by Macon Water Authority and/or the Authority's Engineer.

C. Shop Drawings / Product Data

1. Submit [4] copies of the following submittals to the GDOT Project Manager:
   a. Product data, including size, dimension, capacity, pressure rating, accessories, and special features, installation instructions, and operating characteristics for all proposed materials to show compliance with the requirements of this Special Provision.
   b. Test reports specified in the Quality Acceptance section of this Special Provision.
   c. Pipe manufacturer certification of compliance with specifications.
   d. Operation and maintenance literature, warranties, and other specified information.

D. Construction Record Documentation (Macon Water Authority Specification 01720)

1. SCOPE
   a. The work under this Section includes, but is not necessarily limited to, the compiling, maintaining, recording and submitting of project record documents as herein specified.
   b. Record documents include, but are not limited to:
      i. Drawings;
      ii. Specifications;
      iii. Change orders and other modifications to the Contract;
      iv. Engineer field orders or written instructions, including Requests for Information (RFI) and Clarification Memorandums;

v. Reviewed shop drawings, product data and samples;

vi. Test records.

c. The Contractor shall maintain on the Project site throughout the Contract Time an up to date set of Record Drawings.

2. MAINTENANCE OF DOCUMENTS AND SAMPLES

a. Storage

i. Store documents and samples in the Contractor's field office, apart from documents used for construction.

ii. Provide files and racks for storage of documents.

iii. Provide locked cabinet or secure storage space for storage of samples.

b. File documents and samples in accordance with format of this Special Provision.

c. Maintenance

i. Maintain documents in a clean, dry, legible condition and in good order.

ii. Do not use record documents for construction purposes.

iii. Maintain at the site for the MWA one copy of all record documents.

d. Make documents and samples available at all times for inspection by MWA Engineer.

e. Failure to maintain the Record Documents in a satisfactory manner may be cause for withholding of a certificate for payment.

3. QUALITY ASSURANCE

a. Unless noted otherwise, Record Drawings shall provide dimensions, distances and coordinates to the nearest 0.1 foot.

b. Unless noted otherwise, Record Drawings shall provide elevations to the nearest 0.01 foot for all pertinent items constructed by the Contractor.

c. The Contractor shall employ a currently registered professional engineer to prepare the Record Drawings from a post-construction, field run survey. The Record Drawings shall provide elevations to the nearest 0.01 foot for all valve depths, valve box covers, meter boxes, fire hydrants and other pertinent items constructed by the Contractor. The Record Drawings shall show water main size, material, fitting location and angle, fire hydrants (with manufacturer and date labeled on drawing), valve boxes, valve size (with valve type and turn direction labeled on drawing), water services and size and meter boxes. The Record Drawings shall provide dimensions, distances, and state plane coordinates to the nearest 0.01 foot and horizontal angles to the nearest 10 seconds.

4. RECORDING

a. Label each document "PROJECT RECORD" in neat, large printed letters.

b. Recording

i. Record information concurrently with construction progress.

ii. Do not conceal any work until required information is recorded.

5. RECORD DRAWINGS

a. Record Drawings shall be reproducible, shall have a title block indicating that the drawings are Record Drawings, the name of the company preparing the Record Drawings, and the date the Record Drawings were prepared. The Contractor will provide drawings submitted in either the (.dxf) or the (.dwg) version R13 or later on a non-rewritable (Read Only) CD, along with two (2) sets of plans in the same format as shown on the disk. The Record Drawings shall be submitted on a (24" x 36") sheet.

b. Legibly mark drawings to record actual construction, including:

i. All Construction

1. Changes of dimension and detail.
2. Changes made by Requests for Information (RFI), field order, clarification memorandums or by change order
3. Details not on original Drawings

ii. Site Improvements, Including Underground Utilities

1. Horizontal and vertical locations of all exposed and underground utilities and appurtenances, both new facilities constructed and those utilities encountered, referenced to permanent surface improvements.
2. Location of and dimensions of roadways and parking areas, providing dimensions to back of curb when present.
3. The locations shall be referenced to at least two easily identifiable, permanent landmarks (e.g., power poles, valve markers, etc.) or benchmarks.
4. The Record Drawings shall include the horizontal angle and distance between manhole covers.

iii. Structures

1. Depths of various elements of foundation in relation to finish first floor datum or top of wall.
2. Location of internal and buried utilities and appurtenances concealed in the construction, referenced to visible and accessible features of the structure.

6. SPECIFICATIONS
   a. Legibly mark each section to record:
      i. Manufacturer, trade name, catalog number, and supplier of each product and item of equipment actually installed.
      ii. Changes made by Requests for Information (RFI), field order, clarification memorandums, or by change order.
7. SUBMITTAL
   a. Within two (2) weeks of all contract utility components entering service, deliver two (2) sets of Record Documents to the MWA Engineer.
   b. Within two (2) weeks of all contract utility components entering service, deliver one (1) set of Record Documents to the DOT Project Manager.
   c. Accompany submittal with transmittal letter, in duplicate, containing:
      i. Date
      ii. Project title and number
      iii. Contractor's name and address
      iv. Title and number of each record document
      v. Signature of Contractor or Contractor's authorized representative
      vi. Name and address of firm preparing record document
      vii. Stamp by a professional engineer

670.1.04 Quality Assurance

A. The Contractor shall comply with applicable codes, ordinances, rules, regulations and laws of local, municipal, state or federal authorities having jurisdiction over the Project.

B. Furnish manufactured items, pipe, fittings, valves, service components, and appurtenances from manufacturers having regularly produced such items as specified herein which have proven satisfactory in actual service, over at least a 2-year period, or as approved by the Utility Owner and GDOT.

C. Regardless of tolerances permitted by industry standards specified herein, the Utility Owner or the GDOT Project Manager may reject pipe or appurtenances at the manufacturing plant or project site which have cracks, chips, blisters,

rough interior or exterior surface, evidence of structural weakness, joint defects, or other imperfections that might in the opinion of the Project Manager contribute to reduced functional capability, accelerated deterioration or reduced structural strength.

D. The Utility Owner and the Utility Owner's consultant shall have the right to visit and inspect the work at any time. The Utility Owner may also have an Inspector assigned to the project authorized to inspect portions or all of the utility work done and the preparation, fabrication, or manufacture of the materials to be used. The Utility Owner shall be able to advise GDOT Project Manager of any observed discrepancies or potential problems. The cost of these inspections shall be the responsibility of the Utility Owner.

E. GDOT shall notify the Utility Owner before authorizing any changes or deviations which might affect the Utility Owner's facilities. Contractor shall notify GDOT and Utility Owner a minimum of 24 hours prior to beginning work on utilities.

F. The Utility Owner shall be notified by GDOT Project Manager when all utility work is complete and ready for final inspection. The Utility Owner shall be invited to attend the final inspection and may provide a corrections list to GDOT Project Manager prior to the final inspection.

G. The Contractor shall verify the actual location and depth of all utilities prior to construction. All utilities and structures shall be protected during construction. Any damaged facilities shall be repaired or replaced at the Contractor's expense.

670.2 Materials

All materials provided shall be in conformance with the requirements and standards set forth in the MWA Standards for Design and Construction Specifications – Article I, Section 1.04, current published edition. All pipeline and appurtenance materials in contact with potable water shall be National Sanitation Foundation (NSF) 61 Certified and part of GDOT QPL list.

Pipes and appurtenances shall comply with Section 1417(a)(1) of the Safe Water Drinking Act as amended in 2011 which prohibits the use of any pipe, any pipe or plumbing fitting or fixture, and solder, or any flux, after June 1986, in the installation or repair of (i) any public water system; or (ii) any plumbing in a residential or non-residential facility providing water for human consumption, that is not lead free as defined in Section 1417(d).

670.2.01 Water Piping systems and Appurtenances

Ductile Iron Pipe and Fittings

1. Ductile iron pipe shall meet the latest edition of ANSI/AWWA C150/A21.50 and C151/A21.51 for the class and joint specified with a nominal laying length of 18 (5.5 m) to 20 feet (6 m). Joints for buried ductile iron pipe shall be mechanical or push-on joints. Unless specified otherwise in the MWA Standards for Design and Construction Specifications – Article I, Section 1.04 A, ductile iron pipe diameters 12 inch (300 mm) or less shall be minimum Pressure Class 350, while pipe diameters greater than 12 inch (300 mm) shall be minimum Pressure Class 350.
2. Ductile iron pipe for the interior of structures and above ground installations shall be flanged. Flanges shall be ductile iron and shall be threaded-on flanges conforming to ANSI/AWWA C115/A21.15 or cast-on flanges conforming to ANSI/AWWA C110/A21.10. The minimum class thickness for ductile iron flanged pipe to be threaded is Class 53.
3. Interior surfaces of ductile iron pipe and fittings shall be cement mortar lined in accordance with AWWA C104.
4. Ductile iron shall have an exterior coating as specified in AWWA C151 for ductile iron pipe and AWWA C153/C110 for ductile iron fittings.
5. Buried ductile iron pipe and fittings shall be polyethylene encased at locations indicated on the Plans or as conditions warrant wherever the ductile iron pipe crosses a gas main. Polyethylene encasement tubing shall be in accordance with ANSI/AWWA C105/A21.5 and ASTM A674 and shall have a minimum thickness of 8 mils. Polyethylene encasement tubing shall be blue in color to designate potable water.

6. Fittings: Ductile iron fittings shall be epoxy coated and meet the requirements of ANSI/AWWA C153/A21.53 or ANSI/AWWA C110 A21.10 with a minimum pressure rating of 250 psi. Ends shall be restrained mechanical joint. All ductile iron fittings shall bear the NSF approval seal for potable water pipe.
7. Mechanical Joint Fittings: Mechanical joints consisting of bell, socket, gland, gasket, bolts, and nuts shall conform to ANSI/AWWA C111/A21.11.
8. Push-On Joints: Push-on joints shall be designed in accordance with ANSI/AWWA C111/A21.11. Joint lubrication shall be as furnished by the manufacturer.
9. Rubber gasket joints for push-on or mechanical joints shall conform to the requirements of ANSI/AWWA C111/A21.11.
10. Restrained Joints: Restrained joints shall be provided as shown on the Plans and where required for thrust restraint. Restrained joints shall not require field welding or grooves cut into the pipe barrel for restraint. The restraining joints for mechanical joint fittings shall conform to the requirements of ANSI/AWWA C111/A21.11 with assembly in conformance with AWWA C600 and manufacturer's recommendations. Restrained joints for pipe shall be mechanical joints with ductile iron retainer or push-on type joints and shall have a minimum rated working pressure of 250 psi.
11. Mechanical joint retainer glands may be used to restrain mechanical joint pipe and fittings to the plain end of ductile iron pipe and fittings. Restrainer glands shall be manufactured of ductile iron per ASTM A536.
12. Corrosion-resistant bolts used with ductile iron joints shall be high-strength, low-alloy steel as specified in ANSI/AWWA C111/A21.11.
13. Welded Outlets: Welded outlets in ductile iron pipe shall be provided where specified and indicated on the Plans. Outlets shall be fabricated by welding sections of ductile iron pipe manufactured in accordance with ANSI/AWWA C151/A21.51. Welded outlet pipe shall be fabricated only by the pipe manufacturer. The minimum ductile iron pipe thickness for fabrication of welded outlet pipe shall be Thickness Class 53 for 4-inch to 54-inch (100 to 1350 mm) diameter pipe. All joints on welded-on branch outlets shall be provided in accordance with the latest revision of ANSI/AWWA C111/A21.11 and/or ANSI/AWWA C115/A21.15, as applicable. After the outlets are welded together and prior to finishing, the assembly shall be subjected to a 15 psi air test for leakage. The maximum size and laying length of the welded-on branch outlet shall be recommended by the pipe manufacturer and acceptable to the Utility Owner for the field conditions and connecting pipe or valve.

A. Steel Casing Pipe

1. All materials, design, fabrication, handling, and testing of steel casing pipe shall conform to the requirements of ASTM A139, AWWA C200 and AWWA Manual M11 "Steel Pipe – A Guide for Design and Installation."
2. Steel casing pipe shall be new, smooth-wall, carbon steel pipe conforming to ASTM Specification A139, Grade B with a minimum yield strength of 35,000 psi. Steel casings shall be used with the size, minimum thickness, length, and coating specified on the Plans or the MWA Standards for Design and Construction Specifications – Article I, Section 1.15 B(1).
3. Additional anti-corrosion measures, as specified by the manufacturer or indicated on the Plans, shall be provided at connectors, couplings, rollers, restraints, etc.
4. Unless specified otherwise in the Plans or the MWA Standards for Design and Construction Specifications – Article I, Section 1.15 C (1) casing pipe end seals shall consist of ⅛-inch (6 mm) thick flexible synthetic rubber boot with adjustable stainless steel banding straps. The annular space of the casing shall not be filled with concrete or grout.
5. Casing spacers shall consist of a stainless steel shell, PVC ribbed liner, and non-conducting separators to keep the carrier pipe from touching the casing pipe. Spacers shall be provided at a maximum of 10-foot intervals and within 2 feet (0.6 m) of the end of the casing pipe.

B. Warning Tape

1. Water mains shall be installed with polyethylene film warning tape manufactured for marking and identifying underground water utilities. Tape shall be a minimum of 2 inches (50 mm) wide and 4 mils thick, blue in color, with continuously printed letters reading "CAUTION BURIED WATER LINE BELOW".

C. Gate Valves

1. Gate valves 3 inches (80 mm) and larger shall be of the resilient seat type meeting the requirements of AWWA C509 or C515. Valves shall be iron body, bronze trimmed, with non-rising stems, and shall be fusion-bonded epoxy coated per ANSI/AWWA C550. Valves shall have a minimum design working pressure of 200 psi.
2. Valves shall be manually operated by nut and open counter-clockwise unless specified otherwise in the Plans or the MWA Standards for Design and Construction Specifications – Article I, Section 1.04 B.
3. The resilient seating arrangement shall provide zero leakage at the design working pressure when installed with line flow in either direction. All ferrous surfaces inside and outside shall have a fusion bonded epoxy coating. All valves shall be provided with O-ring seals. The design and machining of valves shall be such as to permit replacing the O-ring seals in the valves while in service without leakage.
4. All gate valves, when fully opened, shall have an unobstructed waterway diameter equal to or larger than the full nominal diameter of the valve.
5. In general, valves shall be designed for vertical installation. Valves installed in the horizontal position shall be provided with bevel gears, extended gear case, rollers, tracks, and scrapers.
6. Exposed or above-ground gate valves shall be outside screw and yoke (OS&Y) flanged joint type with an operating hand wheel. The face-to-face dimensions and drilling shall conform to ANSI B16.10 for Class 125 flanged joint end gate valves.
7. Valves shall include mechanical joints, bolts, glands, gaskets, and all other materials necessary to join to existing work.
8. Provide brass identification tag imprinted with "WATER", valve size, valve type, and direction and number of turns to open. Provide a ¼-inch (8 mm) hole in the brass tag and attach the tag to the end of the locate wire (twist wire around tag). Tag shall be 2-inch (50 mm) diameter and ⅛-inch (6 mm) thick brass with a ¼-inch (8 mm) hole.
9. MWA standard gate valve model is American Flow Control with ductile body, or Engineer-approved equal.

D. Insertion Valves

Provide a water main insertion valve and tapping sleeve assembly in accordance with the following:

1. Resilient seat wedge valve must be rated for a minimum 250 psi for use in water distribution systems meeting AWWA C509 or C515 material specifications and all other applicable AWWA requirements for live installation applications.
2. Stainless steel fasteners must be *AISI Type 304* meeting *AWWA A351–CF8M*.
3. Bolt material must be in accordance with *ASTM B 316* and *ASTM B 253*.
4. Valve stem must be in accordance with *AWWA C-500-80*, non-rising stem.
5. Provide a 2 inch standard square operating valve nut with left turn (counterclockwise) to open.
6. Valve body must be ductile iron with epoxy coating meeting AWWA C550 and NSF 61.
7. Valve Box must be in accordance with the standard specifications.
8. Extension stem/shaft, if necessary, must be *AISI Type 304* or *AISI Type 303* stainless steel with bronze couplings.
9. Flanges must be 150 psi rated in accordance with *AWWA C115*.

E. Valve Boxes

1. All valves shall be equipped with valve boxes. The valve boxes shall be heavy, roadway type boxes. The valve box cover shall be marked "WATER VALVE" or "WATER".
2. Valve box materials shall conform to the requirements and standards set forth in the MWA Standards for Design and Construction Specifications – Article I, Section 1.04 B (3) current published edition.
3. The valve boxes shall be adjustable up or down from the nominal required cover over the pipe. Extensions shall be provided as necessary. A precast concrete ring shall be placed around the valve box opening when outside of paved areas.
4. Valves shall be furnished with extension stems as necessary to bring the operating nut to within 24 inches (600 mm) minimum of the top of the valve box.

F. Service Connection Assemblies

1. Water service connections and plumbing should conform to the standards set forth in the MWA Standards for Design and Construction Specifications – Article I, Section 1.04 B(4-6) and relevant local and/or state plumbing codes or to the Standard Plumbing Code as applicable within the jurisdiction in which the system is located.
2. Service connection assemblies shall be provided for all new service line connections to existing meters. Existing service lines indicated for replacement shall be replaced with new materials from the water main to the existing or new water meter.
3. Service connection assemblies shall include:
   a. Service saddle
   b. Corporation stop
   c. Service line
   d. Fittings
   e. Curb stop
   f. Water meter box
   g. Water meter (separate Pay Item for new service connections)
   h. Backflow preventer (separate Pay Item for new service connections)

G. Service Saddles

1. Service saddles shall have ductile iron or bronze body with stainless steel epoxy coated double tie straps and nuts with pressure rating not less than that of the pipe to which it is to be connected.
2. Saddles shall have a rubber gasket cemented to the body, with compatible threading between the saddle and corporation stop. Saddles shall conform to ANSI/AWWA C800 standards.
3. The service saddle shall provide full support around the circumference of the pipe, providing a bearing area of sufficient width so that pipe will not distort when the saddle is tightened.

H. Water Service Pipe

1. Copper tubing for water service lines shall be seamless and shall conform to ANSI/AWWA C800 and ASTM B88, Type K soft, suitable for potable water use with a working pressure of 150 psi.
2. Water service line fittings shall be as indicated in the International Plumbing Code, 2012 Edition, with current Georgia Amendments.
3. Water service lines larger than 2 inches shall be ductile iron pipe tapped off the main, including an isolation gate valve. DIP and fittings shall be as specified under Section 670.2.01. Gate valves shall be as specified under Section 270.2.01.

I. Corporation and Curb Stops

1. Corporation stops, curb stops, and other appurtenances for plastic or copper service lines shall meet the requirements of ASTM B62 and AWWA C800.

2. Service line taps shall be equipped with corporation stops. Corporation stops in sizes 1-inch (25 mm) through 2-inch (50 mm) shall be manufactured from cast bronze with machined fitting surfaces. The corporation shall be pressure rated to no less than 150 psi.
3. Curb stops shall be ball valve type and made of bronze. Pipe connections shall be suitable for the type of service pipe used and shall be pressure rated for no less than 150 psi.

J. Water Meters

1. Water meters shall be MWA standard models as manufactured by Neptune Technology Group, or Engineer-approved equal.

a. Domestic Service Meters: MWA standard models are listed in the following chart.

5/8" x 3/4" Neptune T-10 Meter
1" Neptune T-10 Meter
1 1/2" Neptune T-10 P/D Meter
1 1/2" Neptune Turbine w/ Strainer
2" Neptune Turbine w/ Strainer Ecoder
2" Neptune T-10 Meter
3" Neptune Turbine w/ Strainer Ecoder
3" Tru-Flo Compound Meter
4" Neptune Turbine w/ Strainer Ecoder
4" Neptune Protectus Fire Flow
4" Tru-Flo Compound Meter
6" Neptune Turbine w/ Strainer Ecoder
6" Tru-Flo Compound Meter
6" Neptune Protectus Fire Flow
8" Neptune Turbine w/ Strainer Ecoder
8" Neptune Protectus Fire Flow

b. Irrigation Service Meters: MWA standard models are listed in the following chart.

5/8" x 3/4" Neptune T-10 Meter
1" Neptune T-10 Meter
1 1/2" Neptune T-10 P/D Meter
1 1/2" Neptune Turbine w/ Strainer

2" Neptune Turbine w/ Strainer Ecoder
2" Neptune T-10 Meter
3" Neptune Turbine w/ Strainer Ecoder
4" Neptune Turbine w/ Strainer Ecoder

2. Water meters shall register flow in units of cubic feet.
3. Water meters 2" and larger shall have two-way communications encoder registers and meter interface units with the ability to make time-synchronized, system-wide readings. The integrated encoder / meter interface unit shall be the Neptune E-Coder R900i, or Engineer-approved equal.

K. Meter Boxes

1. Water meter boxes shall be high density reinforced plastic body with one piece cast iron lid with lettering "WATER METER" on cover unless otherwise indicated on the Plans. Recessed hole shall be included in lid, if required by Utility Owner for electronic reading capability. Provide box of size and height appropriate to installation of meter and accessories required. Meter and curb stop shall be fully encased by the meter box.
2. Water meter box shall be of sufficient size to house curb stop, meter, and any other items shown on Plans.
3. MWA standard meter box is Quazite, or Engineer-approved equal.

L. Concrete Vault

1. Concrete vaults shall conform to the requirements and standards set forth in the MWA Standards for Design and Construction Specifications – Article I, Section 1.04 E and standard details.

M. Fire Hydrant Assembly

1. Fire hydrants shall be the compressive, post style, dry barrel type, and shall conform to the requirements of ANSI/AWWA C502 and local code requirements. The valve opening shall not be less than 5 ¼ inch. All hydrants shall be complete including joint assemblies.
2. Hydrants shall be suitable for working pressure of 250 psi and shall be hydrostatically factory tested to 500 psi.
3. All working parts, including the seat ring, shall be removable through the top without excavating or disturbing the barrel of the hydrant.
4. Hydrants shall be constructed with a lubricant chamber which encloses the operating threads and which provides automatic lubrication of the threads and bearing surfaces each time the hydrant is operated. This assembly shall be comprised of a top O-ring serving as a dirt and moisture barrier and a lower O-ring which will serve as a pressure seal.
5. Hydrants shall include two 2½-inch (65 mm) hose nozzles and one 4½-inch (115 mm) pumper connection with National Standard Fire Hose Threads unless specified otherwise in the Plans or the MWA Standards for Design and Construction Specifications – Article I, Section 1.04 F. Hydrant threads shall comply with the specifications of the local agency providing fire service.
6. Hydrant nozzle shall be constructed to face in any direction at any time by removing the safety flange bolts and revolving the head without digging or shutting off water.
7. Hydrants shall have pentagon operating nut measuring 1½-inch (40 mm) point to flat and shall open by turning counter-clockwise.

8. Hydrant shall have a safety-type vertical barrel with a minimum 3½-foot bury and be designed with safety flange and/or bolts to protect the barrel and stem from damage, eliminate flooding, and allow rapid replacement if hydrant is struck. All risers necessary for deeper bury applications shall be provided by the hydrant manufacturer.
9. Hydrants shall include positive, automatic drain valves which shall be fully closed when the main valve is open.
10. Bottom inlet of hydrant shall be provided with mechanical joint connection complete with accessories as specified and shall be 6-inch (150 mm) nominal diameter.
11. Fire hydrant shall be painted above ground with rust inhibiting enamel paint. Hydrant upper barrels shall be prime coated with epoxy coating. Hydrant top coat shall be a catalyzed two-part polyurethane per ASTM D 3359.
12. MWA standard paint color selection:
    a. Hydrant end caps = Federal Spec Yellow #3186
    b. Hydrant weather cover = Silver #822903
13. Hydrant assemblies shall be restrained from the hydrant to the tee at the main.
14. Hydrant assemblies shall include a 6-inch gate valve attached directly to the tee at the main.
15. Hydrants shall be the American B-84-B (manufactured by American Flow Control), or Engineered-approved equal.

N. Backflow Prevention Devices

1. Backflow prevention devices shall be installed where indicated on the Plans and shall meet all applicable AWWA, State, and local code/ordinance requirements.
2. Backflow preventer materials shall conform to the requirements and standards set forth in the MWA Standards for Design and Construction Specifications – Article I, Section 1.04 C.

O. Thrust Collars and Thrust Blocks

1. Concrete used for thrust collars or thrust blocks shall meet the "Class A" requirements for concrete listed in Section 500.
2. Thrust collars shall include welded-on collars attached by the pipe manufacturer or retainer glands. Concrete shall be poured continuous around the pipe and bear against undisturbed earth.
3. Reinforcing steel shall meet the requirements set forth in the Plans or the MWA Standards for Design and Construction Specifications – Article I, Section 1.22.
4. Mechanical joint restraints may be utilized in lieu of thrust blocks with the approval of Utility Owner.
5. Contractor shall calculate concrete dimensions such that weight of concrete resists the full thrust forces determined by multiplying the cross-sectional pipe area by the pipe pressure rating.

P. Manholes

1. Precast reinforced manholes shall be manufactured in accordance with ASTM C478 and shall have a minimum wall thickness of 5 inches (127 mm). All concrete shall have a minimum compressive strength of 4,000 psi when tested in accordance with ASTM C478.
2. Joints between precast sections shall be sealed by means of rubber O-ring gaskets or flexible butyl rubber sealant.
3. Non-shrinking grout or a flexible seal shall be used to seal the pipe penetrations and prevent water from entering the manhole.
4. Manhole rings and cover shall be per the MWA Standards for Design and Construction Specifications – Article I, Section 1.04 E and standard details.

Q. Tapping Sleeves and Valves (TS&V)

1. Tapping sleeves shall be the split valve, mechanical type joint. Valves shall be gate valves furnished in accordance with the above specifications. The valves shall have flange x mechanical joint ends. Tapping sleeves shall be Mueller No. 615 or approved equal. Tapping crosses shall be Mueller No. 716 or approved equal. Tapping valves shall be Mueller No. 687 or approved equal.

2. As an alternative to the conventional tapping sleeve and valve, a stainless steel tapping sleeve with mechanical joint outlet and a standard MJ gate valve could be installed. The MJ tapping sleeve shall meet or exceed the following material specifications for use with a standard mechanical joint x mechanical joint, resilient wedge gate valves per ANSI (AWWA C509-94). The mechanical joint outlet shall be a one piece casting with a plain end and MJ gland. The tapping sleeve shall have a MJ outlet gasket. The armor plate, lugs, nuts, bolts shall be 203 (18-8) stainless steel, and gaskets shall be virgin nitrile, Buna-N or equal.
3. "All stainless steel tapping sleeves" may be used in lieu of the above and shall conform to the following specifications: Body: 18-8 type 304 s.s. flange CF 8 cast stainless steel equivalent to 18-8 type 304 s.s. with ANSI 150 lb drilling; recessed for tapping valve per MSS-SP-60. Bolts: Type 304 s.s. Branch outlet: Heavy s.s. pipe. Gasket: Full circumferential gasket compound for use with water, salt solutions, mild acids, bases and sewage.

670.2.02 Delivery, Storage, and Handling

A. Handle pipe, fittings, valves, and accessories carefully to prevent damage. Handle pipe by rolling on skids, forklift, or front end loader. Do not use material damaged in handling. Slings, hooks, or pipe tongs shall be padded and used in such a manner as to prevent damage to the exterior coatings or internal lining of the pipe. Do not use chains in handling pipe, fittings, or appurtenances.

B. To unload pipe, carefully lift and lower it into position using approved padded slings, hooks, or clamps. Furnish equipment and facilities for unloading, handling, distributing, and storing pipe, fittings, valves, and accessories. Make equipment available at all times for use in unloading. Do not roll, drop or dump materials. Any materials dropped or dumped shall be subject to rejection without additional justification.

C. Stored materials including salvaged materials shall be kept in suitable areas safe from damage. The interior of all pipe, fittings, and other appurtenances shall be kept free from dirt or foreign matter at all times. Store and support plastic pipe to prevent sagging and bending. Store plastic pipe and gaskets to prevent exposure to direct sunlight. Valves and hydrants shall be stored and protected from damage by freezing.

D. Pipe shall not be stacked higher than the limits recommended by the manufacturer. The bottom tier shall be kept off the ground on timbers, rails, or concrete.

670.2.03 Salvaged Material

A. Salvaged material shall be delivered to the main Macon Water Authority warehouse for inclusion as stock. The location and contact information are below:

Warehouse Address

951 5th Street

Macon, Georgia 31201

Contact

Mr. Paul Cumbuss

Office: 478-464-5664, Cell: 478-447-3736

B. Material to be salvaged is identified below:

a. Fire hydrant assemblies

b. Riser sections

c. Isolation gate valve at each fire hydrant

670.3 Construction Requirements

670.3.01 Personnel

A. General Provisions 101 through 150.

B. Construction and installation of all water utilities shall be performed by a Contractor prequalified/registered with GDOT.

C. All work specified in this section, except for water system service line installation shall be performed by a Contractor with a valid Utility Contractor's license issued by the State of Georgia. Water service line installation shall be performed by either a Utility Contractor licensed in the State of Georgia or by a Master Plumber licensed in the State of Georgia.

670.3.02 Equipment

A. Ensure all equipment used is in conformance with the requirements and standards set forth in the MWA Standards for Design and Construction Specifications, current published edition.

670.3.03 Preparation

General Provisions 101 through 150.

670.3.04 Fabrication

General Provisions 101 through 150.

670.3.05 Construction

A. Finding Existing Underground Utilities and Obstructions

1. In accordance with Georgia Law, the Contractor shall call the Utility Protection Center, 811, to request utilities to be marked for all areas where construction activities are conducted.
2. Comply with Subsection 107.13 and Subsection 107.21.
3. According to the best information available to GDOT, all known water lines, sewer lines, gas lines, telephone conduits, drainage structures, etc. are shown on the Plans. However, to find such installations, use an electronic pipe and cable finder in locating existing installations or obstructions to the work.
4. When unforeseen conflicts require Plan changes, perform the work as altered according to Subsection 104.03 and Subsection 104.04.
5. Follow all Utility Owner customer notification requirements and obtain approval from the Utility Owner and GDOT Project Manager prior to disrupting any existing water services as required to install the water facilities shown on the Plans.

B. Jack and Bore

Comply with Section 615 for water main installations by jack and bore.

C. Directional Drilling

1. Install water mains and services by means of directional drilling at locations shown on the Plans or where approved by GDOT or Utility Owner. Provide submittals and follow all relevant procedures and requirements set forth in the MWA Standards for Design and Construction Specifications – Article I, Section 2.19.
2. The Contractor shall not initiate horizontal directional drilling until all submittals are received, reviewed, and accepted by GDOT and the Utility Owner, and all required permits are obtained.
3. The Contractor shall select drilling additives and fluid mixture proportions to ensure continuous circulation, bore stability, reduce drag on the pipe, and completely fill the annular space between the bore and the pipe to ensure stability and control settlement.
4. The Contractor shall submit contingency plans for remediation of potential problems that may be encountered during the drilling operations. The contingency plans shall address the observations that would lead to the discovery of the problem and the methods that would be used to mitigate the problem. Potential problems that shall be addressed include:

a. Loss of returns/loss of circulation of drilling fluid.
b. Encountering obstruction during pilot bore or reaming/pullback.
c. Drill pipe or product pipe cannot be advanced.
d. Deviations from design line and grade exceed allowable tolerances.
e. Drill pipe or product pipe broken off in borehole.
f. Product pipe collapse or excessive deformation occurs
g. Utility strike.
h. Hydrolock occurs or is suspected.
i. Excessive ground settlement or heave of ground surface or existing utilities.
j. Inadvertent returns / hydrofracture or surface spills resulting in drilling fluids entering water or reaching the surface.

5. Pipe damaged in directional drilling operations shall be removed and replaced at no additional expense to GDOT or the Utility Owner.
6. Voids developed or encountered during the installation operation shall be pressure grouted with a grout mix approved by GDOT.
7. Installation shall include a locatable conduit system, with identification markers on each side of GDOT right-of-way where applicable.Two (2) insulated 8 gauge solid copper tracers wire shall be attached to the leading end of the pipe pulling head and shall extend the full length of the installed pipe.
8. The location and alignment of the pilot drill progress shall be continuously monitored for compliance with the proposed installation alignment and for verification of the depth of the bore. Monitoring shall be accomplished by computer generated bore logs which map the bore path based on x, y, z coordinate information provided by the locating/tracking system. Readings or plots shall be obtained on every drill rod, and shall be provided to the Inspector on a daily basis. Deviations between the recorded and design bore path shall be calculated and reported on the daily log. If the deviations exceed tolerances specified elsewhere, such occurrences shall be reported immediately to GDOT. The Contractor shall undertake all necessary measures to correct deviations and return to design line and grade.
9. Upon completion of the directional drill the Contractor shall furnish GDOT and the Utility Owner an as-built drawing along with a report of the monitoring of the drilling fluids during the pilot hole and back reamed hole.
10. Drilling fluid pressures, flow rates, viscosity, and density shall be monitored and recorded by the Contractor. The pressures shall be monitored at the pump. These measurements shall be included in daily logs submitted to GDOT. The Contractor shall document modifications to the drilling fluids, by noting the types and quantities of drilling fluid additives and the dates and times when introduced. The reason for the addition of drilling fluid additives or other modifications shall be documented and reported.
11. Management and disposal of drilling fluids shall be the Contractor's responsibility. Excess drilling fluids shall be contained at the entry and exit points until recycled or removed from the site. All drilling fluids shall be disposed of in a manner acceptable to the appropriate local, state and federal regulations. The Contractor's work will be immediately suspended by GDOT whenever drilling fluids seep to the surface other than in the boring entrance or exit pit, or when a paved surface is displaced.
12. Surfaces damaged by the work shall be restored to their preconstruction conditions at no additional cost to GDOT or Utility Owner, and with no increase in contract time.
13. The following items shall be as shown on the Plans, unless otherwise approved in writing by GDOT:
    a. Entry / exit points
    b. Drill entry / exit angles
    c. Pilot bore path

1) Radius of Curvature
2) Entry / exit tolerances: Contractor shall be solely responsible for all work necessary to correct excessive deviations from line and grade, including re-drilling, redesigning connections, and acquiring additional easement, at no additional cost to GDOT or Utility Owner and without schedule extension.

14. The pilot bore shall be pre-reamed and reamed using equipment and methods submitted by the Contractor. The Contractor shall completely ream the bore to the final diameter prior to pullback.
15. Pullback: The pipe shall be installed by pulling it into the reamed bore path in a continuous operation, behind a final reaming tool selected by the Contractor. The pipe shall be isolated from excessive torsional and axial stresses by a swivel device with a pre-established breakaway tensile capacity that is lower than the allowable tensile strength of the pipe. The maximum pull (axial tension force) exerted on the pipelines shall be measured continuously and limited to the maximum allowed by the pipe manufacturer with an appropriate factor of safety so that the pipe or joints are not overstressed. The end of the pipe shall be closed during the pull back operation.
16. Pipelines shall be adequately supported during installation so as to prevent overstressing or buckling. The Contractor shall provide adequate support/rollers along the pipe layout area to support the required length of pipe for the bore. The pipe layout area shall be cleared of all large stones, construction debris, or other foreign objects that could damage the pipe during pullback. The Contractor shall monitor and inspect pipe rollers and method for suspending pipe at entry during the pullback operation to avoid damage to the pipe.
17. The end of the pipe shall be closed during the pull back operation.
18. Each length of pipe shall be inspected and cleaned as necessary to be free of debris immediately before joining.
19. The Contractor shall at all times handle the pipe in a manner that does not overstress or otherwise damage the pipe. Vertical and horizontal curves shall be limited so that wall stresses do not exceed 50% of yield stress for flexural bending of the pipe. If the pipe is buckled or otherwise damaged, the damaged section shall be removed and replaced by the Contractor at his expense. The Contractor shall take appropriate steps during pullback to ensure that the pipe and tracer wires will be installed without damage.
20. If necessary, the pipe shall have water added as it enters the bore to achieve neutral buoyancy and reduce pullback loads and to ensure that adequate internal pressure is maintained at all points to counter balance collapse pressures.
21. The Contractor shall cease pullback operations if the pipe is damaged and shall remove the pipe from the bore and repair the pipe using the manufacturer's recommended procedure or replace the damaged pipe before resuming installation.
22. Damage to the pipe resulting from manufacturer defects, installation, or grouting is the responsibility of the Contractor, including costs for replacement and labor and materials. To confirm no damage to the pipe, upon completion of pull back, the Contractor shall pull a sphere or pig through the entire length of the pipeline. The pig shall be one inch less in diameter than the internal diameter of the product pipe, capable of allowing water to pass through it, complete with a pulling cable on either side. If the pig or sphere cannot pass through the pipe, it shall be considered collapsed and damaged.
23. After the carrier pipe is completely pulled through the bore, a sufficient relaxation period as recommended by the pipe manufacturer shall be provided before the final pipe tie-in.
24. The Contractor shall conduct a final hydrostatic test of the installed pipeline. Final test shall be in accordance with these specifications. The Contractor shall repair any defects discovered during this test, and repeat until the pipe passes the test.

D. Excavating Trenches

1. The Contractor shall provide all necessary shoring and bracing materials as required to assure safe working conditions and to protect the excavations. The Contractor shall be required to fully comply with all applicable OSHA Excavation Safety Standards. No separate payment shall be made for any special procedure used in connection with the excavation.

2. Excavate trenches to the proper depth and width as follows:
   a. Trench to Grade: Excavated trench bottoms shall be firm, free from boulders, and conform to the established grade. Limit open trench excavation to a maximum of three 300 feet (90 m) ahead of completed backfill.
   b. Care shall be taken not to over excavate except where necessary to remove unstable material, irregularities, lumps, rock, and projections. Unnecessary over excavation shall be replaced at the Contractor's sole expense and in accordance with Subsection 670.3.05.
   c. Excavation carried below the established grade lines shown or established by the Utility Owner shall be backfilled according to Section 207 and Subsection 670.3.05. Use Class I or Class II Soils (defined in Section 810) and firmly compact the soil.
   d. Where the established grade of a trench is in rock, undercut the bottom of the trench by at least 6 inches (150 mm) beneath the pipe or conduit and the greater of 24 inches (600 mm) wider than the pipe/conduit (12 inches or 300 mm each side) or 42 inches (1050 mm) wide, then backfill and compact according to Subsection 670.3.05.
   e. Excavation in pavement and pavement patching shall be according to GA Standard No. 1401. Remove the pavement according to Section 444, except no separate payment shall be made for sawed joints.
   f. Dewatering: Remove all water from excavations and maintain the excavations free of water while construction therein is in progress. Provide dewatering equipment as necessary to conform to this requirement. Dewatering procedures must meet all state and local regulatory requirements.
3. Minimum Trench Depth
   a. Excavate trenches to provide at least 48 inches (1.2 m) cover depth directly above the pipe to the finished pavement surface, sidewalk, grass, etc. unless indicated otherwise on the Plans or by the Utility Owner and GDOT Project Manager. In order to avoid existing utilities, it may be necessary for the pipe to be laid shallower or deeper than the minimum cover specified. At such time the Contractor shall not be allowed extra compensation for additional excavation necessary for deeper installations.
   b. Side slopes of the trenches shall be as nearly vertical as practicable. Trenches in excess of 5 feet (1.5 m) deep shall either have the trench sides laid back to conform to OSHA requirements for trench safety, if such area is available within the limits of excavation, or, alternatively, trenches deeper than 5 feet (1.5 m) shall be excavated via trench box or shored and braced.
   c. If any part of a water main is to be placed in or under a new embankment, finish the embankment to at least a 2-foot plane above the outermost portion of the pipe barrel before excavating the trench.
4. Trench Width: Excavate trenches to uniform widths wide enough to allow proper installation of pipe, fittings, and other materials, a minimum of 6 inches (150 mm) and a maximum of 12 inches (300 mm) each side of the pipe or conduit.
5. Trench Bell Holes: Excavate bell holes deeply and widely enough to make joints and to allow the pipe barrel to rest firmly on the trench bottom.
6. Trench bottom: Excavate and shape trench bottoms to provide uniform bearing and support of pipes and conduits. Shape subgrade to provide continuous support of bells, joints, and barrels of pipes and for joints, fittings, and bodies of conduits/pipes. Remove projecting stones, tree roots, debris, and sharp objects along trench subgrade. Abrupt changes in grade of the trench bottom shall be avoided. Unless otherwise indicated in the Plans, trenches for water mains shall be graded as much as possible to avoid high and low points that necessitate air release valves.
7. Excavations may be completed and refilled either by hand or by machinery. Hand tool excavation shall be conducted where necessary to protect existing utilities and structures.
8. In the event that unsuitable material is encountered at or below the excavation depth specified or shown on the Plans, the Utility Owner and GDOT Project Manager shall be notified. Such material shall be removed and replaced with suitable material in accordance with Section 205 by the written request of the GDOT Manager.

E. Tapping Sleeve and Valve Assembly

1. When making connections under pressure, (i.e. when normal water service must be maintained), furnish and use a tapping sleeve and valve assembly or line stop fittings as indicated. Coordinate with Utility Owner 72 hours in advance for water service interruptions and temporary shut-offs. Evening or weekend work may be required to complete direct connections and tie-ins. Connect to existing mains as follows:
   a. Before opening new pipeline trenches, locate the various points of connection to be made into existing pipelines. If necessary, uncover pipelines for the Utility Owner and GDOT Project Coordinators to prescribe the connections and fittings needed.
   b. Connect to existing pipelines only to meet operating requirements. Cut existing lines only after obtaining the Utility Owner's permission.

F. Laying Water Mains and Appurtenances

1. Preparing and Handling Pipes
   a. Thoroughly clean the pipe and fittings before laying them. Keep them clean until accepted.
   b. Use suitable tools and equipment. Do not damage the pipe, especially the cement lining inside the pipe.
   c. Cut pipe in a manner to avoid damage to pipe or lining, leaving a smooth end at right angles to pipe axis. Smooth and bevel edges of cut pipe for push-on, gasket type joints.
   d. Bedding shall be provided as specified by the project plans or pipe manufacturer for the type of conditions encountered. Bedding typically consists of granular soil free of lumps, clods, cobbles, and frozen materials, and shall be graded to a firm-but-yielding surface without abrupt changes in bearing value. Unstable soils and rock ledges shall be undercut from the bedding zone and replaced with suitable material.
   e. Bed pipe on coarse granular material in flat bottom trench with entire pipe barrel bearing uniformly on coarse granular material, except for an approximately 18-inch (450 mm) gap at pipe balance point for sling removal. Hand excavate and backfill as required to provide uniform and continuous bearing and support for the pipe. Do not support pipe on hubs or end bells. Consolidate coarse granular material under and around pipe up to pipe centerline by tamping.
   f. Join pipe with bells facing direction in which laying operation is progressing. Lay pipe upgrade wherever line grade exceeds 10%.
   g. Carefully examine pipe for cracks and other defects and do not lay defective pipe. If pipe or castings appear to be cracked, broken, or defective after laying, remove and replace those sections.
2. Alignment and Gradient
   a. Pipe alignment and gradient shall conform to the Plans. Deflect pipe lines only where indicated on the Plans, within allowable horizontal and vertical deflection angles according to the manufacturer.
   b. Water mains shall be laid at least 10 feet (3 m) horizontally from any existing or proposed sanitary sewer, storm sewer or sewer manhole. The distance shall be measured edge-to-edge. When local conditions prevent a horizontal separation of 10 feet (3 m), the water main may, on a case-by-case basis, be laid closer to a sewer provided the water main is laid in a separate trench or on an undisturbed earth shelf located on one side of the sewer at such an elevation that the bottom of the water main is at least 18 inches (450 mm) above the top of the sewer.
   c. Maintain a vertical separation of at least 18 inches (450 mm) between the crown of sanitary sewers and the invert of existing or proposed water mains with the sewer located below the water main. Where a vertical separation of 18 inches (450 mm) cannot be provided, and the water main cannot be relocated to provide adequate clearance, center one full length of water main over the sewer so that both joints of the water main will be as far from the sewer as possible.
3. Special Requirements for Laying Water Mains
   a. Excavate, clean, lay, joint, and backfill progressively and uniformly according to these requirements:

1) Never leave pipe in the trench overnight without completely jointing and capping.
2) Do not leave completed pipeline exposed in the trench. Backfill and compact the trench as soon as possible after laying, jointing, and testing are complete.
3) At the close of work each day and when laying pipe, close the exposed end of the pipeline in the trench with an approved wood or metal head or barrier.
4) If necessary to cover the end of an incomplete pipeline with backfill, close the end of the pipe with a satisfactory cap or plug.

G. Installing Water Mains by Open Cut

1. Use the following flexible joints for connections inside the roadway shoulders or curbs and gutters:
   a. Mechanical Joints:
      1) When using mechanical joints, thoroughly wash bell sockets, spigots, gland, gasket, nuts, and bolts with soapy water before assembly. Keep these parts wet until the jointing operation is complete.
      2) Tighten nuts within the torque range recommended by the manufacturer. Check the tightening tolerance with a torque wrench.
      3) If effective sealing is not attained at the maximum recommended torque, disassemble, thoroughly clean, then reassemble the joint.
      4) Do not overstress bolts to compensate for improper installation or defective parts.
   b. Push-On Type Joints
      1) Use push-on joints made according to the manufacturer's recommendations.
      2) Install ductile iron pipe in accordance with AWWA C600.
2. Restraints for pipe joints and fittings shall be provided as specified and as shown on the Plans. Restraints shall be installed per manufacturer's recommendations.
3. Buried ductile iron pipe and fittings shall be polyethylene encased as specified and as indicated on the Plans. Polyethylene encasement tubing shall be secured with polyethylene tape and installed in accordance with ANSI/AWWA C105/A21.5.
4. Unless otherwise specified by the MWA Standards for Design and Construction Specifications –Article I, Section 2.04 B (1), provide pipe detection wire on all non-metallic pipe systems. Tape the tracer wire to the top center of the pipe at intervals which prevent wire displacement during backfilling operations. Stub tracer wire up 6 inches (150 mm) above finished grade at all valves and fire hydrants. For splices, use direct bury kits. After backfilling is complete, test electrical continuity of each tracer wire segment and provide test results to Utility Owner and GDOT Project Manager.
5. Install continuous underground warning tape during backfilling of trench for underground water distribution piping. Install 12 inches (300 mm) below finished grade, or 6 inches (150 mm) below subgrade under pavements and walkways, and buried directly over piping.
6. Use pipe cutters when cutting pipe or special castings. Do not use a hammer, chisel, or a cutting torch.
7. Locations where water mains do not meet minimum depth of cover requirements shall include a steel casing or concrete encasement installed per the MWA Standards for Design and Construction Specifications –Article I, Section 1.16 C.
8. Isolation Valves on Water Mains: Install and joint gate valves as specified in Subsection 670.2.01in accordance with AWWA C600. Include the valve box and valve marker where required.
11. Pressure reducing/sustaining valves of the size and type indicated shall be installed as shown on the Plans per manufacturer's recommendations and the MWA Standards for Design and Construction Specifications – Article I, Section 1.04 C(3)e.

12. Fire Hydrants: Install and joint hydrants as specified in Subsection 670.2.01 and in accordance with AWWA C600. Include required vertical extension sections. Also, include pipe strap installation, restraints, crushed stone drain, and backfill according to the Plans and this Section. Spacing of fire hydrants shall be as indicated in the MWA Standards for Design and Construction Specifications – Article I, Section 1.04 F.
13. Concrete Thrust Collars and Thrust Blocks: If required, furnish materials and install thrust collars or concrete blocking according to Subsection 670.2.01. Form and pour concrete thrust collars or blocks in accordance with the Plans and the MWA Standards for Design and Construction Specifications – Article I, Section 1.12 C. Blocking shall be poured against undisturbed earth and all forms shall be removed before backfilling.
14. Backfilling
    a. Furnish equipment, labor, and when necessary material required for backfilling the pipe line trenches according to Section 207, and as follows:
        1) When testing for visual leaks in open trenches, do not backfill until testing is complete and leaks are eliminated.
        2) When retaining pavement adjacent to trenches, replace removed pavement with the same or better material when approved in accordance with the appropriate Section for the pavement type replaced.
        3) Place backfill on subgrades free of mud, frost, snow, or ice.
        4) Place and compact bedding course on trench bottoms and where indicated. Shape the bedding course to provide continuous support for bells, joints, and barrels of pipes and for joints, fittings, and bodies of conduits/pipes.
        5) Backfill shall include Class I or Class II Soils as defined in Section 810 or suitable material that conforms to the MWA Standards for Design and Construction Specifications – Article I, Section 1.13.
        6) Backfill shall be placed in two stages: first, side fill to a height of 12 inches (300 mm) above the top of pipe; second, overfill to former surface grade. Side fill shall consist of granular material laid in 6-inch (150 mm) layers each consolidated by mechanical tamping and controlled addition of moisture, to a density of 95% as determined by as determined by the Standard Proctor test (AASHTO T-99 Method D) or GDT 67. Overfill shall be layered and consolidated to match the entrenched material in cohesion and compaction. The top 12 inches (300 mm) shall be compacted to 100% of specified density. Consolidation by saturation or ponding shall not be permitted.
        7) Soil Moisture Control: Uniformly moisten and aerate subgrade and each subsequent fill or backfill soil layer before compaction to within 2% of optimum moisture content. Remove and replace, or scarify and air dry, otherwise satisfactory soil material that exceeds optimum moisture content by 2% and is too wet to compact to specified dry unit weight.
        8) Initial backfill shall be carefully compacted under pipe haunches and evenly up on both sides and along the full length of piping or conduit to avoid damage or displacement of piping or conduit. Place and compact fill and backfill of satisfactory soil to final subgrade elevation. Backfill voids with satisfactory soil while removing shoring and bracing and/or trench boxes.
        9) After backfilling, maintain temporary surface restoration per GA Standard No. 1401 until permanent repaving is complete. No separate payment shall be made for replaced pavement.
15. Disinfection of Water Mains
    a. New and existing pipelines and appurtenances shall be disinfected before placing into service. Disinfection can be conducted in conjunction with the pressure test.
    b. Before the main is chlorinated, it shall be filled to eliminate air pockets and shall be flushed to remove particulates.
    c. During disinfection of the water mains, an appropriate cross-connection control device, consistent with the degree of hazard, shall be provided for backflow protection of the active distribution system.

d. Chlorination: Sterilize using only potable water with calcium hypochlorite (HTH), 1% chlorine solution, or other products acceptable to the Utility Owner and GDOT Project Manager and Department of Public Health. Comply with AWWA C651 including Section 9 procedures on final connections to existing mains.

1) The chlorine solution used for disinfection of water mains shall have a free chlorine residual concentration not less than 25 mg/L or in accordance with the MWA Standards for Design and Construction Specifications – Article I, Section 1.18.

2) Add enough disinfectant to provide a chlorine residual of not less than 10 parts per million (ppm) in 24 hours or as required in accordance with the latest edition of AWWA Standard C651. All valves and hydrants shall be operated to ensure disinfection of the appurtenances.

3) At the end of 24 hours, check the chlorine residual. If it is less than 10 ppm, add additional chlorine and check the line again after 24 hours.

e. After the applicable retention period, the chlorinated water must not be disposed in a manner that will harm the environment. Neutralizing chemicals, such as Sulfur Dioxide, Sodium Bisulfite, Sodium Sulfite or Sodium Thiosulfate can be used to neutralize the chlorine residual remaining in the water to be wasted.

f. After sterilization, flush the line with potable water until the chlorine residual is equal to the existing system.

1) After final flushing and before the water main is placed into service, water samples shall be collected from the main and tested for microbiological quality in accordance with the Georgia Rules for Safe Drinking Water. Samples shall be taken in the presence of the Utility Owner and GDOT Project Manager.

2) When test results are not satisfactory, the pipeline shall be flushed and disinfected again as necessary without additional compensation until satisfactory results are obtained.

H. Laying Service Lines and Appurtenances

1. Except as modified in this Section, construct and install service connection assemblies and lines according to the Plans and the requirements for laying water mains. Install service lines at locations shown on the Plans or where designated by the Utility Owner and GDOT Project Manager.
2. Install new pipe from the water main to the final location of the meter or to points designated by the Utility Owner and GDOT Project Manager to connect with existing or future service lines on abutting property.
3. No water service connections shall be performed until the main is tested and disinfected. Water service lines shall be tested and disinfected prior to connection to the main.
4. If required, install water service line inside casing pipe according to the Plans.
5. At roads, paved drives, retaining walls, and other paved areas, install service tubing or casing pipe by pushing, pulling, or augering techniques. At all other locations, install service tubing by trenching and backfilling unless directed otherwise by GDOT.
6. Service line installation includes all connections using saddles, unions, valves, fittings, corporation stops, curb stops, casing, and any and all appurtenant work required to provide a complete water service connection.
7. Excavate for service lines as specified in Subsection 670.3.05 with the following exceptions:
   a. Ensure that trenches under pavements and across driveways are deep enough to provide at least 48 inches of cover, unless otherwise directed by the Utility Owner and GDOT Project Manager.
   b. At other areas, trench depth and backfill cover may be adjusted at the discretion of the Utility Owner and GDOT Project Manager to provide at least 18 inches of cover.
8. Backfill service lines as specified in Subsection 670.3.05.
9. All service lines, fittings, and appurtenances necessary for the water service connections shall be installed and backfilled in accordance with the manufacturer's recommendations.

10. If any galvanized water service line between the main and the meter, not otherwise accounted for, is discovered during construction, the Contractor shall remove the galvanized line and replace it with a copper line as per the Macon Water Authority standard.

I. Cutting and Capping Existing Water Mains

1. Disconnect by sawing or cutting and removing a segment of existing pipe where cutting and capping or plugging is shown on the Plans or directed by the Utility Owner or GDOT Project Manager. Provide a watertight pipe cap or plug and restraint mechanism to seal off existing mains indicated to remain in service. If water main is to be abandoned or removed and not specified to be grout filled, seal ends with a pipe cap or plug or with a masonry plug and minimum 6-inch cover of concrete on all sides around the end of the pipe.
2. The Contractor shall be responsible for uncovering and verifying the size and material of the existing main to be capped or plugged.
3. Abandoned water mains greater than 6-inch shall be filled with flowable fill per Section 600 at the locations indicated on the Plans. Air release valves and water service connections along the abandoned main shall be plugged prior to grouting. Prior to backfilling, the bottom of the manhole shall be broken up in such a manner that water will readily pass through. The top portion of the manhole structure shall be removed in order to establish a minimum of 3 feet cover from subgrade or finished grade when not under the pavement and filled with sand or suitable backfill.
4. Water mains shall be flushed prior to placement of flowable fill. Use concrete or grout pumps capable of continuous delivery at planned placement rate with sufficient pressure to overcome friction and fill the sewer main.

J. Relocating, Adjusting, Abandonment and Removing

1. Fire Hydrant Assemblies
   a. Remove all fire hydrant assemblies including valve and valve boxes that are disconnected from the active system.
   b. Protect items during removal and relocation.
   c. Disconnect each joint before removing items from the trench.
   d. All removed fire hydrant assemblies, including valves, shall be delivered to the MWA's warehouse.
   e. Consider valve boxes part of the valve assembly and remove them intact with the valve.
2. Water Valves and Boxes
   a. Adjust or remove water valves and valve boxes according to the Plans or as designated by the Utility Owner and GDOT Project Manager.
   b. Protect items during adjustment or removal. Replace lost or damaged Items at no expense to GDOT or the Utility Owner.
   c. Disconnect each joint before removing items from the trench.
   d. Test for leakage, adjust, and retest until no leaks appear.
   e. Backfill as specified in Subsection 670.3.05.
   f. Consider valve boxes part of the valve assembly and remove them intact with the valve.
3. Existing Water Meters and Boxes
   a. Relocate existing water meters and boxes according to the Plans or the Utility Owner and GDOT Project Manager.
   b. To relocate water meters, remove the existing meter, associated backflow preventer, and box and replace with a short section of pipe.
   c. Inspect along with the Utility Owner and GDOT Project Manager each meter and backflow preventer before removal to determine the condition of each.
   d. Unless specified otherwise in the Plans, new water meters and backflow preventers shall be furnished by the Contractor as necessary if these devices are deemed unsuitable for reuse. Contractor shall provide new water meter boxes if deemed unsuitable for reuse. The Contractor shall coordinate delivery of the water meters and backflow preventers to correspond to construction operations to minimize service interruptions.

e. Relocation of water meters and boxes shall include without additional compensation, required pipe, unions and appurtenances, adapter fittings, necessary storage protection, and installation of meter, backflow preventer, meter box, and curb stop in the existing service line.

4. Existing Water Service Lines
   a. Water lines shall be adjusted to grade by excavating the existing lines, lowering or raising the lines, and backfilling according to the Plans or the Utility Owner and GDOT Project Manager.
   b. Furnish new materials or fittings required for the adjustment without additional compensation.
   c. Change connections at the main that result from this work.
   d. Repair leaks and damage caused by the operations at no expense to GDOT.
   e. When retaining a water meter where an existing service line is to be adjusted, adjust the existing meter and box to the proper grade without additional compensation.
5. Other Water Appurtenances
   a. Relocate, adjust to grade, or remove water main appurtenances including but not limited to air release valves, backflow preventers, pressure reducing/sustaining valves according to the Plans or as designated by the Utility Owner and GDOT Project Manager.
6. Utility related items identified on the Plans to be salvaged are the property of the Utility Owner. Contractor shall coordinate with Utility Owner on delivery of salvaged materials. Should the Utility Owner choose to not accept these materials they shall be removed from the project site as soon as practical.
7. Removal of Water Main

   Water mains to be removed and disposed of offsite. Backfill trenches and other excavations dug for removing in accordance with Section 610 - Sub-Section 610.3.05 G. Backfilling.
8. Abandon Water Main

   Water mains to be abandoned in excess of 6 inches in diameter shall be filled in accordance with section 600 – "Flowable Fill".

K. Aerial Crossings

1. Support must be provided for all joints in pipes utilized for aerial crossings. The supports must be installed to prevent frost heave, overturning, and settlement. Precautions against freezing, such as insulation, shall be provided.
2. When the aerial crossing is accomplished by attachment to a bridge or drainage structure, the crossing shall meet all requirements of the agencies that own or have jurisdiction over such structures.
3. Aerial installations shall be installed to avoid or minimize stream blockage during normal high water events.
4. Underground valves shall be provided at both ends of the aerial crossing so that the section can be isolated for testing or repair. The valves shall be restrained, easily accessible, and not subject to flooding.
5. Appropriate guards shall be installed at both ends of the aerial crossing to prevent public access to the pipe.

670.3.06 Quality Acceptance

A. Materials Certification

For certain products, assemblies and materials, not on GDOT QPL List, and in lieu of normal sampling and testing procedures by the Contractor, the Utility Owner, and GDOT may accept from the Contractor the manufacturer's certification with respect to the product involved under the conditions set forth in the following paragraphs:

1. Material certifications shall be provided to GDOT Project Manager, who shall distribute to the Utility Owner. Material certifications shall be approved by GDOT and the Utility Owner prior to construction. The certification shall state/specify that the named product conforms to these specifications and requirements of the Utility Owner and GDOT, and representative samples thereof have been sampled and tested as specified.

2. The certification shall either:
   a. Be accompanied by a certified copy of the test results, or
   b. Certify such test results are on file with the manufacturer and will be furnished to the Utility Owner and GDOT Project Coordinators upon demand.
3. The certification shall state/specify the name and address of the manufacturer and the testing agency and the date of tests; and sets forth the means of identification which shall permit field determination of the product delivered to the project as being the product covered by the certification.
4. Submit certification in triplicate with two copies of the covered product to the GDOT Project Coordinator, and one copy sent to GDOT's State Materials and Research Engineer at 15 Kennedy Drive, Forest Park, Georgia. The certification shall specify the project number and contract ID number. No certificate shall be required for Portland cement when furnished from a manufacturer approved by GDOT.
5. GDOT or the Utility Owner will not be responsible for any costs of certification or for any costs of the sampling and testing of products in connection therewith.
6. GDOT and the Utility Owner reserve the right to require samples and test products for compliance with pertinent requirements irrespective of prior certification of the products by the manufacturer. Any materials that fail to meet specification requirements will be rejected.
7. In accordance with the BUY AMERICA requirements of the Federal regulations (23 U.S.C. 313 and 23 CFR 635.410) all manufacturing processes for steel and iron products or predominantly of steel or iron (at least 90% steel or iron content) furnished for permanent incorporation into the work on this project shall occur in the United States. The only exception to this requirement is the production of pig iron and the processing, pelletizing and reduction of iron ore, which may occur in another country. Other than these exceptions, all melting, rolling, extruding, machining, bending, grinding, drilling, coating, etc. must occur in the United States.
   a. Products of steel include, but are not limited to, such products as structural steel piles, reinforcing steel, structural plate, steel culverts, guardrail steel supports for signs, signals and luminaires, and cable wire/strand. Products of iron include, but are not limited to, such products as cast iron frames and grates and ductile iron pipe. Coatings include, but are not limited to, the applications of epoxy, galvanizing and paint. The coating material is not limited to this clause, only the application process.
   b. Records to be provided by the Contractor for this certification shall include a signed mill test report and a signed certification by each supplier, distributor, fabricator, and manufacturer that has handled the steel or iron product affirming that every process, including the application of a coating, performed on the steel or iron product has been carried out in the United States of America, except as allowed by this Section. The lack of these certifications will be justification for rejection of the steel and/or iron product or nonpayment of the work.
   c. The requirements of said law and regulations do not prevent the use of miscellaneous steel or iron components, subcomponents and hardware necessary to encase, assemble and construct the above products, manufactured products that are not predominantly steel or iron or a minimal use of foreign steel and iron materials if the cost of such materials used does not exceed one-tenth of one percent (0.1%) of the total contract price or $2,500.00, whichever is greater.

B. Flushing

1. Prior to testing, water mains shall be cleaned and flushed to remove all sand and foreign matter. Water used for filling and cleaning shall be from an approved potable water source. Sufficient flushing water shall be introduced into the mains to produce a scouring velocity of not less than 3.5 feet per second to resuspend the solids, and this rate of flow shall be continued until the discharge is clear and no evidence of silt or foreign matter is visible. The Contractor shall dispose of all water used for flushing without causing a nuisance or property damage.

2. In the event that the Contractor cannot obtain the flushing velocity, a poly-pig swab may be used to clean the pipeline. The Contractor shall submit pigging plan to the Utility Owner and GDOT for review. The plan shall include type of pig material, water flow rate, discharge points, poly-pig detector and retrieval options.

C. Hydrostatic Testing of Water Mains

1. When the Utility Owner and GDOT Project Manager approve a section of pipe for testing, the Contractor shall furnish the materials, equipment, and labor to conduct the pressure and leakage tests. Use a test pump, pressure gauge, and a means of measuring the water necessary to maintain the required pressure during the prescribed testing time. All pressure and leakage testing shall be done in the presence of the Utility Owner and GDOT Project Coordinators as a condition precedent to the approval and acceptance of the system. All pipes shall have been thoroughly flushed prior to testing. Simultaneous or separate pressure and leakage tests may be performed.
2. All water for testing and flushing shall be potable water provided by the Contractor, at no cost to the Utility Owner or GDOT, from an approved source. Flow velocity during line filling shall not exceed 2 feet (0.6 m) per second (fps).
3. Testing Requirements
   a. Water mains shall be tested in sections between valves, thereby, testing each valve for secure closure. Testing shall be done immediately after installation and backfilling has been completed.
   b. The mains shall be tested in accordance with the latest revision of AWWA C600 for ductile iron under an average hydrostatic pressure of the greater of 1.5 times the maximum working pressure or 150 psi as measured at the lowest point in the system for a minimum of 2 hours. Pressure shall be maintained until all sections under testing have been checked for evidence of leakage.
   c. While the system is being filled with water, air shall be carefully and completely exhausted. If permanent air vents are not located at all high points, the Contractor shall install corporation stops or fittings and valves at such points at no additional expense to the Utility so the air can be expelled as the pipe system is slowly filled.
   d. Makeup water shall be added, as required, to maintain the pressure within 5 psi of the test pressure. The quantity used shall be measured by pumping from a calibrated container. The maximum amount of makeup water allowed shall be determined by the following formula:

$$L = \frac{SD\ P^{0.5}}{148{,}000}$$

in which,

L = Allowable Leakage in gallons per hour

S = Length of pipe being tested in feet

D = Nominal pipe diameter in inches

P = Average test pressure during the test in psi gauge

   e. Visible leaks shall be corrected regardless of total leakage shown by test. All pipe fittings and other materials found to be defective under test shall be removed and replaced. Lines which fail to meet test requirements shall be repaired and retested as necessary until test requirements are met. No additional compensation shall be made for repairs or retesting.

670.3.07 Contractor Warranty and Maintenance

General Provisions 101 through 150.

670.4 Measurement

Incidentals including excavation, rock removal, backfilling, disinfection, testing, temporary water connections, pavement removal, pavement replacement, and other incidentals required for the installation of water distribution items are not measured for separate payment and shall be included in the applicable Pay Items below. Water mains, service lines, and other associated Items of work in this Specification, complete, in place, and accepted, are measured for payment as follows:

A. Ductile Iron Water Mains

Ductile iron water mains shall be measured in linear feet for each size, thickness class, and type (restrained, non-restrained) installed. Measurement shall be horizontally above the centerline of the pipe and shall include the length of valves and fittings.

B. Ductile Iron Fittings

Ductile iron fittings are considered subsidiary to the water line in which they are used and are not measured for separate payment. This Item includes, but is not limited to, wyes, tees, bends, crosses, sleeves, plugs and caps, and reducers.

C. Restrained Joints

Joint restraints used with the installation of ductile iron pipe are considered subsidiary to the water line in which they are used and are not measured for separate payment.

D. Insertion Valves

Insertion valves shall be measured on an individual basis for each size valve and box assembly acceptably installed.

E. Fire Hydrant Assemblies

Fire hydrant assemblies shall be measured on an individual basis on the number of hydrants acceptably installed.

F. Concrete Thrust Blocks

Concrete thrust blocking installed shall not be measured separately. Include the cost of the work in the bid price for the appropriate item. The concrete thrust block applies to all bend angles, tees, and other fittings in order to provide required thrust restraint.

G. Water Service Lines

Service lines shall be measured in linear feet (meters) for each size of service pipe installed. Measurements are made from end to end and from center of lines to ends of branches and include tapping saddle, sleeve, valves, service connection assemblies, sleeves, adapters, and fittings.

H. Steel Casing

Steel casing pipe of the wall thickness and diameter specified shall be measured by the linear foot for each size and thickness of steel casing pipe installed. Measurement shall be horizontally above the centerline of the casing.

I. Cutting and Capping Water Main

Cutting and capping of water mains shall not be measured separately. Cut and Cap Water Main shall be included in the contract price for Flowable Fill

J. Removal of Water Mains

Removal of Water Main shall be measured per linear foot for each size pipe actually removed in accordance to Section 610. Measurement shall be horizontally above the centerline of the pipe removed and shall include the length of valves and fittings.

K. Flowable Fill

Flowable fill shall be measured as indicted in Section 600 per cubic yard of flowable fill acceptably installed.

L. Abandon Water Main

Abandon Water Main will not be measured separately. Abandon Water Main shall be included in the contract price for Flowable Fill

M. Polyethylene Encasement

Polyethylene Encasement will not be measured separately. Polyethylene Encasement shall be included in the contract price for Ductile Iron Water Main

N. Bridge Hangers

Hangers, brackets, rollers, fasteners and other miscellaneous appurtenances required for installing water mains on bridges will be considered incidental to the water main installation and will not be measured separately for payment.

O. Adjustment of Valve Boxes

Existing valve boxes adjusted to grade in their original locations shall be measured on an individual basis on the number of each valve box acceptably adjusted in accordance to Section 611.

P. Relocation of Existing Water Meter and Box

Relocation of existing water meter and box shall be measured on an individual basis on the number of each acceptably relocated water meter and box including final adjustment of boxes.

670.4.01 Limits

General Provisions 101 through 150.

670.5 Payment

The Contract Unit Price for each Item, complete and accepted, shall include all costs incidental to the construction of the Item according to the Plans and as specified in this Section. The unit prices bid shall include due allowance for the salvage value of all materials removed from existing or temporary lines and not installed in the completed work. All such surplus items shall become the property of the Contractor unless such surplus items are specified to be salvaged. Payment for any Item listed below is full compensation for the Item or Items complete in place.

A. Ductile Iron Water Mains

Ductile iron mains shall be paid for at the unit price per linear foot for each diameter pipe installed and shall cover the cost for all materials, transportation, labor, equipment, excavation, sheeting and shoring, installation of pipe, joints and jointing materials, anchoring, warning tape, polyethylene encasement, protection of existing utilities, connections to existing water mains, sampling taps, temporary blow-offs, flushing, cleaning, pigging, chlorine for disinfection, disinfection, backfilling, backfill materials, disposal of unsuitable backfill material, tamping, testing, densities, utility crossings, dewatering, trench stabilization, clean-up, restoration and all work and materials necessary to place the pipe into service.

B. Ductile Iron Fittings

Ductile iron fittings are considered subsidiary to the water line in which they are used and are not measured for separate payment as outlined in the manufacturers' catalogues and shall cover the cost for all materials, transportation, labor, equipment, excavation, sheeting and shoring, installation of fittings, joints and jointing materials, anchoring, warning tape, polyethylene encasement, protection of existing utilities, flushing, chlorine for disinfection, disinfection, backfilling, backfill materials, disposal of unsuitable backfill material, tamping, testing, densities, utility crossings, dewatering, trench stabilization, clean-up, restoration, all other related and necessary materials, work and equipment required to install a complete and operable pipeline fitting. This Item includes, but is not limited to, wyes, tees, bends, crosses, sleeves, plugs and caps, couplings, and reducers.

C. Restrained Joints

Restrained joints are considered subsidiary to the water line in which they are used and are not measured for separate payment as outlined in the manufacturers' catalogues and shall cover the cost for all materials, transportation, labor, equipment, excavation, sheeting, shoring, installation of the restraint device, polyethylene encasement, protection of existing utilities, backfilling, backfill material, disposal of unsuitable backfill materials, tamping, testing, densities, utility crossings, dewatering, trench stabilization, clean-up, restoration, and all work and materials necessary to install the restrained joint.

D. Fire Hydrant Assembly

Fire hydrant assemblies shall be paid for at the unit price per each hydrant installed and shall cover the cost for all materials, transportation, labor, equipment, excavation, sheeting and shoring, installation of the fire hydrant assemblies (all configurations), vertical extensions, tapping sleeve, valve, gate valve w/box, hydrant lead piping, joint connections, fittings, tees, restraints, crushed stone drain, polyethylene encasement, protection of existing utilities, valve box, concrete pad or collar, valve identification disc, valve marker, valve tag, chlorine for disinfection, disinfection, backfilling, backfill material, disposal of unsuitable backfill materials, tamping, testing, densities, utility crossings, dewatering, trench stabilization, clean-up, restoration, and all work and materials necessary to install the fire hydrant assembly and place it in service.

E. Concrete Thrust Blocks

Concrete thrust blocks are considered subsidiary to the water line in which they are used and are not measured for separate payment and shall cover the cost of all materials, transportation, labor, equipment, excavation, sheeting and shoring, concrete, forming, reinforcement, protection of existing utilities, backfilling, backfill material, disposal of unsuitable backfill materials, tamping, testing, densities, dewatering, trench stabilization, clean-up, restoration, and all work and materials necessary to install a complete thrust block.

F. Water Service Lines

Water service lines shall be paid for at the unit price per linear feet (meters) of the size service line installed and shall cover the cost for all materials, transportation, labor, equipment, excavation, sheeting and shoring, installation of water service line, tracer wire, connection to tapping saddle, sleeve, corporation stops, fittings, curb stops, casing pipe, plugging abandoned water service connection, removal of abandoned water service line, protection of existing utilities, locating and connection to existing or new water main, chlorine for disinfection, disinfection, sampling points, backfilling, backfill materials, disposal of unsuitable backfill material, tamping, testing, densities, utility crossings, dewatering, trench stabilization, clean-up, restoration, and all work and materials necessary to place the water service line into service. Water meter and box shall be paid for under a separate Pay Item.

G. Steel Casing

Steel casing pipe shall be paid for at the unit price per linear foot according to the diameter and thickness of the steel casing installed and shall cover the cost for all materials, transportation, labor, equipment, excavation, sheeting and shoring, protection of existing utilities, steel casing pipe, skid, steel straps, coatings, casing spacers, end seals, boring and jacking pits, backfilling, backfill materials, disposal of unsuitable backfill material, tamping, testing, densities, dewatering, trench stabilization, clean-up, restoration, and all work and materials necessary to install the steel casing except where such items are shown to be paid for under a separate Item. The carrier pipe shall be paid from other applicable Pay Item.

H. Cutting and Capping Existing Water Main

Cutting and capping of existing water mains are considered subsidiary to the water mains which are abandoned and shall be included in the unit price for flowable fill and shall cover all materials, transportation, labor, equipment, excavation, sheeting and shoring, protection of existing utilities, backfilling, backfill material, disposal of unsuitable backfill materials, tamping, testing, densities, dewatering, trench stabilization, clean-up, restoration, and all work and materials

necessary to cut and plug existing water mains, except where such items are shown to be paid for under a separate Pay Item.

I. Removal of Water Main

Removal of water mains in conflict with the proposed construction items shall be paid for at the unit price per linear foot for each identified line size removed shall cover the cost for all materials, transportation, labor, equipment, excavation, sheeting and shoring, protection of existing utilities, backfilling, backfill material, disposal of unsuitable backfill materials, tamping, testing, densities, dewatering, trench stabilization, clean-up, bypass piping (as required), restoration, and all work and materials necessary to locate, remove and dispose of the pipe and associated appurtenances. Items to be removed due to conflict with proposed construction items may include fittings, isolation valves, valve boxes, steel casings, casing spacers, water service lines, water meter boxes, thrust blocks, concrete, and other items whether shown on the plans or not.

J. Flowable Fill

Flowable fill shall be measured as indicted in Section 600 per cubic yard of flowable fill acceptably installed.

K. Abandon Water Main

Abandon Water Main will not be measured separately for payment. Abandon Water Main shall be included in the contract price for Flowable Fill

L. Polyethylene Encasement

Polyethylene Encasement will not be measured separately. Polyethylene Encasement shall be included in the contract price for Ductile Iron Water Main

M. Adjustment of Valve Boxes

Existing valve boxes adjusted to grade in their original locations shall be paid for at the unit price per each and shall cover the cost for all materials, transportation, labor, equipment, saw cutting, excavation, concrete pad or collar, protection of existing utilities, leak detection, tamping, testing, densities, dewatering, clean-up, restoration, and all work and materials necessary to adjust the valve box to grade in its original location.

N. Relocation of Water Meter and Box

Relocation of existing water meter and boxes shall be paid for at the unit price of each water meter and box relocated and shall cover the cost of all materials, transportation, labor, equipment, excavation, sheeting and shoring, removal of existing water meter and box, installation at another location, adjustment to final grade, protection of existing utilities, chlorine for disinfection, disinfection, backfilling, backfill material, disposal of unsuitable backfill materials, tamping, testing, densities, utility crossings, dewatering, trench stabilization, clean-up, restoration, and all work and materials necessary to relocate the water meter and box except where such items are shown to be paid for under a separate Item. The Contractor may furnish a new water meter box at no additional cost to the Utility Owner or GDOT. The Contractor shall replace any water meter box broken during construction at no additional cost to the Utility Owner or GDOT. The new service line from the main to the relocated meter shall be paid for under a separate Pay Item.

Payment will be made under:

Item No. 600	Flowable Fill	Per cubic yard
Item No. 610	Remove Water Main_____ in	Per linear foot
Item No. 611	Adjust Water Meter Box to Grade	Per each
Item No. 611	Adjust Water Valve Box to Grade	Per each

Item No. 670	Water Main_____ in	Per linear foot
Item No. 670	Water Service Line_____ in	Per linear foot
Item No. 670	Insertion Valve_____ in	Per each
Item No. 670	Fire Hydrant Assembly - Complete	Per each
Item No. 670	Steel casing_____ in	Per linear foot
Item No. 670	Relocate Existing Water Meter Including Box	Per each

670.5.01 Adjustments

General Provisions 101 through 150.

Georgia Department of Transportation

State of Georgia

Special Provision

STP00-3223-00 (002), STP00-3223-00 (004), BRMLB-3223-00 (006),
P.I. NUMBERS 342080, 351090, & 351095
Widening & Bridge Replacement – Jeffersonville Rd from Walnut Creek to Recreation Rd & Millerfield Rd to Bristol Dr;
Widening/Reconstruction – Jeffersonville Rd from SR 19/Emery Hwy to Walnut Creek
Jeffersonville Rd @Walnut Creek
MACON-BIBB COUNTY

SUPPLEMENTAL SPECIFICATION

Section 687 - Traffic Signal Timing

Add the following:

687.1 General Description

Develop and implement, by a prequalified Contractor/Consultant, a traffic signal operating plan that provides safe and efficient operation of the Intersections defined in Table 687-4. As a MINIMUM, this work will include:

- Coordinate with local GDOT District and/or local government(s) to gather agency preferred timing parameters and expectations, and to facilitate a smooth transition from existing signal timing plans to new signal timing plans.
- Evaluation of existing traffic operations, system equipment functionality, and inventory of assets.
- Collect two-hour turning movement counts (TMC's) for the AM, mid-day, and PM peak periods at each Intersection. For contractor timing projects (if approved by the Engineer AND the signals reside in a rural area), one-hour TMC's may be collected in lieu of two-hour TMC's.
- Collect directional (tube) counts (7-day/24-hour) per control section, as appropriate or as recommended by the Engineer. A minimum of one (1) directional count is required and additional directional counts are needed if the number of intersections exceeds seven (7) or if there are significant changes in traffic volumes along the corridor.
- Develop, implement and fine-tune a minimum of four (4) signal timing plans per control section, unless otherwise specified by the Engineer. In most cases, more than the minimum required will be needed to successfully complete the project.
- Develop additional timing plans as needed, including holiday, seasonal, weekend and other special plans as requested by the Engineer. The number of additional plans shall be discussed as part of the kickoff meeting. For contractor timing projects, the Consultant will need to address this item prior to providing a fee to the contractor(s).
- Conduct before/after studies and prepare project performance measures to detail signal timing improvements.

687.1.01 Definitions

Use the following definitions for purposes of this section:

- **Prequalified Contractor/Consultant:** One who is qualified to perform work in Area Class Codes 3.06, 3.07, and 3.09 in the Department's Consultant Prequalification regulations.

- **Signal Timing Plan:** A unique combination of cycle length/split/offset for all Intersections within a system or control section.
- **Control Section:** Any portion of a traffic control system, which can be controlled by a single set of timing parameters and in which all Intersections change timing patterns at the same time.
- **Engineer:** The State Signal Timing Engineer or District Traffic Engineer for the District in which the Intersections are located.
- **Intersections:** All the Intersections listed in Table 687-4. In the event there are no Intersections listed, the Contractor/Consultant shall request the list of Intersections to be re-timed from the maintaining agency.
- **Directional (tube) Count:** The measurement of the total traffic volume traveling a roadway in a single direction.
- **Turning Movement Count (TMC):** The measurement of the directional traffic volume traveling through an individual Intersection.
- **Before/After Study:** The measurement of the travel time, stops, and emissions through a control section and the comparison of the before versus after data. "Before" data is gathered prior to making any changes. "After" data is gathered once the new timing plans are implemented, fine-tuned and accepted by the Engineer.
- **Approved** or **Approval:** Written notice (via letter, memorandum or email) from the Engineer or his designated representative.

687.1.02 Related References

A. Standard Specifications

Section 108 – Prosecution and Progress
Section 647 – Traffic Signal Installation
Section 925 – Traffic Signal Equipment

687.1.03 Submittals

In the sequence and order listed, submit one (1) electronic (.PDF) copy to the Engineer for review and approval. Approval of each submittal must be obtained before conducting work on subsequent submittals. *Hard copies of any/all reports **may** be requested by the Engineer and/or maintaining agency.*

1. Kickoff Meeting
2. Preliminary Timing Report
3. Final Timing Report
4. Project Closeout

Note: Signal timing performed as part of a GDOT construction project should be submitted to the signal contractor for submission to the Engineer. This will ensure the project inspector from the respective GDOT area office, or from the consulting firm performing project inspections for GDOT, is knowledgeable for purposes of payment requests.

See Table 687-3 for workflow chart.

687.2 Materials

687.2.01 Software

The Department will not provide resources to fulfill any Contractor obligations under this Special Provision. The Department will not furnish any software or equipment for the development and implementation of timing plans. Obtain all necessary licensed software, equipment and materials to support this work effort.

687.3 Construction Requirements

687.3.01 Kickoff Meeting

A kickoff meeting, in person or via conference call (however preferred by the Engineer), with the Engineer and any other parties involved in the timings will be conducted to determine locations to collect Directional Counts, time of day to collect TMC's, travel run routes, local jurisdiction timing preferences, project schedule, whether or not to develop traffic responsive timing plans, and overall project expectations.

After the meeting is complete, an email submission of the meeting minutes shall be sent to all parties involved for verification of project decisions. A project schedule and graphic depicting approved locations for TMCs and Directional Counts should also be submitted as part of the meeting minutes. An example of a system map with count locations is shown in Exhibit 687-3.

At this time, "Before" travel time runs should be collected per the route(s) agreed upon at the Kickoff Meeting. TMC's and Directional Counts should also be collected as agreed upon in the Kickoff Meeting.

687.3.02 Preliminary Timing Report

Visit all Intersections listed in Table 687-4 during the AM, MD and PM peak traffic periods (weekends may also be required) in order to make qualitative assessments of Intersection operation. Make note of queue length, delays, conflicts or any other operational characteristics that should be considered in evaluating and developing coordinated traffic signal timing plans. Make note of the surrounding land use and traffic generators to gain insight on the daily traffic patterns of motorists in the area.

Develop a traffic signal Preliminary Timing Report containing, but not limited to the following data:

1. Intersection Inventory
2. Clearance Calculations
3. Methodology for Evaluating Performance Measures
4. Existing System Evaluation and Operational Analysis
5. Traffic Count Data in Summarized Form
6. Raw Count Data
7. Proposed Time of Day Plans and Comparison to Existing
8. Modeling Analysis and Proposed Improvements

687.3.02.01 Intersection Inventory

Prepare an inventory of the conditions at each Intersection and collect all data required to effectively devise a signal timing plan for the Intersections. Inventory the Intersection configuration, signing and marking, marked and unmarked crosswalk distances, turn lane storage lengths, signal phasing and signal timing at all Intersections as well as any other data required to complete the system timing plans. The minimum limits of this inventory include the vehicle detection locations. The purpose of the inventory is for the preparation of signal timing plans, signal system database and system maps. An example of an Intersection Inventory Sheet is shown in Exhibit 687-1. An example of an Intersection Diagram is shown in Exhibit 687-2. For Intersections with new construction, a copy of the project construction plan sheet is acceptable.

All (cabinet, controller, conflict monitor, battery backup, vehicular and pedestrian signals, communications equipment, signs, etc.) equipment must be inventoried and logged into the current version of the GDOT Signal Inventory Database. An example of the data collected is shown in Exhibit 687-2.

687.3.02.02 Clearance Calculations

Calculation of Pedestrian and Vehicular Clearance Values should follow the MUTCD guidelines, unless the local jurisdiction has its own standard for calculating clearances. The clearance time consists of the yellow change interval and the all-red clearance interval that separates phases. Tables 687-1 and 687-2 should be utilized to calculate vehicular clearance intervals.

The intersection diagrams shall detail where the measurements for both vehicular and pedestrian clearance values were taken.

Yellow Clearance Interval: The length of time such that the distance traveled at the 85th percentile speed in that length of time is equal to the distance required to stop from the posted speed limit. It is calculated using the "ITE Formula" where:

$$Y = t + v/(2a + 2Gg)$$

Where:

Y = yellow change interval (seconds)
t = perception – reaction time (seconds) (assume 1 second)
v = design velocity (feet/sec)
a = deceleration rate (feet/sec.^{2}) (assume 10 ft/sec^2)
G = acceleration due to gravity (32.2 ft/sec^2)

g = grade in decimal form (1 percent = 0.01) {Round UP to nearest grade}

Table 687-1 Yellow Clearance Time (Y) Chart (Seconds)

SPEED (MPH)	GRADE (PERCENT)										
	5	4	3	2	1	0	-1	-2	-3	-4	-5
25	3.0	3.0	3.0	3.0	3.0	3.0	3.0	3.0	3.0	3.1	3.2
30	3.0	3.0	3.0	3.1	3.1	3.2	3.3	3.4	3.4	3.5	3.6
35	3.2	3.3	3.3	3.4	3.5	3.6	3.7	3.7	3.8	4.0	4.1
40	3.5	3.6	3.7	3.8	3.8	3.9	4.0	4.1	4.3	4.4	4.5
45	3.8	3.9	4.0	4.1	4.2	4.3	4.4	4.5	4.7	4.8	4.9
50	4.2	4.3	4.4	4.5	4.6	4.7	4.8	4.9	5.1	5.2	5.4
55	4.5	4.6	4.7	4.8	4.9	5.0	5.2	5.3	5.5	5.6	5.8
60	4.8	4.9	5.0	5.1	5.3	5.4	5.6	5.7	5.9	*	*
65	5.1	5.2	5.4	5.5	5.6	5.8	5.9	*	*	*	*
70	5.4	5.6	5.7	5.8	6.0	*	*	*	*	*	*

*Minimum Yellow Clearance Time should be 3.0 seconds. If the calculated yellow clearance time is greater than 6.0 seconds, consult with the Engineer.

All-red Clearance Interval: The length of time needed to clear the intersection based on the vehicle speed. It is calculated using the "ITE Formula" where:

$R = (w + l)/v$

Where:

R = All-red Clearance Time (seconds)
w = width of the intersection, stop bar to opposite curb (or crosswalk when the crosswalk is greater than 20' from the intersection) OR the furthest point of conflict (feet)
l = length of vehicle (assume 20 feet)
v = design velocity (feet/sec)

Table 687-2 All-red Clearance Time (R) Chart (Seconds)

SPEED (MPH)	WIDTH OF INTERSECTION (FEET)										
	40	50	60	70	80	90	100	110	120	130	140
25	1.6	1.9	2.2	2.4	2.7	3.0	*	*	*	*	*
30	1.5	1.6	1.8	2.0	2.3	2.5	2.7	2.9	*	*	*
35	1.5	1.5	1.6	1.7	1.9	2.1	2.3	2.5	2.7	2.9	*
40	1.5	1.5	1.5	1.5	1.7	1.9	2.0	2.2	2.4	2.6	2.7
45	1.5	1.5	1.5	1.5	1.5	1.7	1.8	2.0	2.1	2.3	2.4
50	1.5	1.5	1.5	1.5	1.5	1.5	1.6	1.8	1.9	2.0	2.2

	55	1.5	1.5	1.5	1.5	1.5	1.5	1.5	1.6	1.7	1.9	2.0
	60	1.5	1.5	1.5	1.5	1.5	1.5	1.5	1.5	1.6	1.7	1.8
	65	1.5	1.5	1.5	1.5	1.5	1.5	1.5	1.5	1.5	1.6	1.7
	70	1.5	1.5	1.5	1.5	1.5	1.5	1.5	1.5	1.5	1.5	1.6

*All-red Clearance Time should be a minimum of 1.5 seconds. If the calculated red time is greater than 3.0 seconds, the additional time should be added to the Yellow Clearance Time, clearly documented as such, and discussed with the Engineer.

Pedestrian Intervals: Pedestrian clearance times should be calculated in accordance with the current GDOT adopted Manual on Uniform Traffic Control Devices (MUTCD).

The pedestrian intervals consist of a Walk Interval, a Pedestrian Change Interval, and a Buffer Interval. The Walk Interval shall be a walk time of 4-7 seconds minimum. The Pedestrian Change Interval should be the calculated pedestrian clearance interval and may be lowered by the amount of the buffer interval or the vehicle clearance time (yellow and all red). The pedestrian clearance interval is calculated using the distance from curb to curb along a crosswalk divided by a walking speed of 3.5 feet per second. Special considerations may require a slower walking speed to be used to calculate this interval. Buffer Intervals shall consist of the Yellow Change Interval plus the Red Clearance Interval.

687.3.02.03 Methodology for Evaluating Performance Measures

An explanation of the travel run methodology and the software being used to conduct the travel runs will be included as part of this report. Also, once the travel runs are complete, explain the procedure for studying the "Before" and the "After" data to show project costs and benefits. Additional performance measures (for example, arrival rate on green) and analysis methodology should be detailed at this time.

687.3.02.04 Existing System Evaluation and Operational Analysis

An evaluation of current system conditions shall be included in the Preliminary Timing Report. Detail about directionality, queues, existing levels of service, and traffic generators are expected. Demonstrate the current operational characteristics of the system using field collected data and the modeling software approved at the kickoff meeting.

"Before" Travel Runs should be conducted at this time.

687.3.02.05 Traffic Count Data in Summarized Form

After the directional count locations have been approved (in the kickoff meeting), conduct the directional counts. In general, directional counts should be taken along major arterials and may be taken on major side streets if needed. Take directional counts for seven (7) consecutive days, twenty-four (24) hours per day. Use an automatic traffic counter that produces a written record of the count and time of day. Summarize the directional count data on a volume summary form. From the count data, develop a tabular and graphic presentation of directional traffic volumes showing 15-minute interval volumes and hourly interval volumes over the seven consecutive day period. An example of tabular 15-minute interval volumes are show in Exhibit 687-6 and an example of graphical hourly interval volumes is shown in Exhibit 687-7.

After the TMC locations and time periods have been approved (in the kickoff meeting), conduct the TMC's. Summarize peak hour turning movement counts in fifteen (15) minute increments for one-hour intervals. Differentiate in the turning movement counts between trucks and passenger vehicles, and include pedestrian counts. Summarize the count data on turning movement count forms. An example of turning movement count forms is shown in Exhibit 687-8.

Turning Movement Count Data should also be provided at this time in a summarized form, such as an intersection schematic detailing turning movement counts at intersections where data has been collected.

687.3.02.06 Raw Count Data

Provide all raw count data as collected for the project. This may be included as an appendix item to this report.

687.3.02.07 Proposed Time of Day Plans and Comparison to Existing

Describe how the proposed timing plans and TOD compare to the existing system operation. An example of a timing plan and TOD comparison is shown in Exhibit 687-9.

Proposed Timing Plans shall be listed and described individually detailing traffic conditions while the plan is running and what the plan is attempting to achieve. An operational analysis shall be included that details the existing operation and how the proposed timing plans will improve the performance of the signal system. The modeling software files shall also be submitted for review.

687.3.02.08 Modeling Analysis and Proposed Improvements

Develop software models of the proposed timing plans with approved software by the Department. Evaluate each proposed timing plan with the modeling software based on proposed performance measures. Summarize the proposed improvements in tabular or graphical form, clearly demonstrating the before conditions of the project and the proposed after conditions as reported through software modeling. This can be done through approved performance measures, such as Level of Service (LOS), queue analysis, number of stops reduction, overall delay reduction, travel time reduction, emissions reductions, arrival rate on greens, and any other industry accepted metric.

Submit one (1) electronic (.PDF) copy of the Preliminary Timing Report to the Engineer for review and approval. Obtain written approval of the Preliminary Timing Plan Report prior to implementation.

687.3.03 Timing Plan Implementation and Fine Tuning

687.3.03.01 Database Development and Testing

Determine values for all controller parameters (local and coordination) and prepare the system database for the Intersections listed in Table 687-4. Include the entire database for the local and master controllers, as well as central server settings.

Each of the proposed timing plans shall be tested prior to field implementation. Testing results shall be documented and included as part of the Preliminary Timing Report. An example of office testing documentation is shown in Exhibit 687-11.

687.3.03.02 Field Implementation

Upon receipt of written approval of the Preliminary Timing Report by the Engineer, implement the new signal and system timing data for the entire system. Upon approval, Contractor/Consultant shall notify the Engineer at least three (3) working days in advance of the implementation of the system timing plans. Do not schedule implementation on peak traffic days or peak travel times without prior approval from the Engineer. At this stage, if one isn't found in the cabinet, a data key shall be supplied by GDOT or the local jurisdiction and kept inside the cabinet drawer with current timing data. Data keys should be labeled with the applicable controller firmware version and date.

Enter only approved data into the equipment at each location. If an Intersection is ready for turn-on before the initial timing plans are developed, the existing timings (if suitable) or other approved temporary timings may be installed until the initial timing plans are developed. Do not activate any new phases under temporary timings without the approval of the Engineer. Enter the new timing data at each controller, through a master controller, or from a central workstation. If entering the timing data from a central workstation, have a person experienced with controller operation on-site in the field during the implementation process. Obtain approval of the method of data entry from the Engineer prior to the entry of any data. Develop and implement all settings required for the system database. Conduct initial field verifications at time of implementation. Review the operation of equipment in the field to verify that the correct cycle lengths, splits, offsets and phasing sequence are being implemented and that no major operation problems occur. Field testing documentation should be submitted to the Engineer after implementation. An example of field testing documentation is shown in Exhibit 687-12.

Review the timing plans and adjust this data as required by actual field conditions or as directed by the Engineer. Update the data key with the current timing as changes are made.

687.3.03.03 Field Fine Tuning

Fine-tuning consists of an on-street review of the timing plans by the Contractor/Consultant. All timing plans should be verified based on traffic conditions at the time the plan is running in the TOD schedule. Cycle lengths, splits and offset should be field verified based on traffic conditions by the Consultant/Contractor. All adjustments to the timing plans should be uploaded to the final database and the local Intersection data key.

Fine-tuning approval consists of an on-street review (system evaluation) of the timing plans by the Contractor/Consultant, the Department and the Local Agency, if applicable. A written request (via email) is to be sent to the Engineer, the Department and the Local Jurisdiction for the system evaluation at least five (5) working days in advance of the proposed date for the review. It is not the intent of the approval for the Department and the Local Agency to accomplish fine-tuning for the Contractor/Consultant. System evaluations are reserved for the Department and/or Local Agency to review and approve, reject or request changes to the final timings, as installed by the Contractor/Consultant. As directed by the Department, the system evaluation could involve rejection of the timing plans, at which point the Contractor/Consultant must repeat the fine-tuning process and then request a follow-up approval with the Department. If so directed, implement the necessary adjustments and repeat the detailed on-street review. The Department reserves the right to require that adjustments be made due to conditions observed in the field.

Make any adjustments to the timings requested by the Department/Local until the Final Timing Report is submitted for review. Anticipate implementing all plans into the system and fine tuning all plans during the TOD/day-of-week (and season of year, if applicable) that the plans are scheduled to be in effect. Present to the Department for approval any contract scheduling conflicts that may interfere with the proper scheduling of the timing plan implementation along with proposed resolutions.

Perform "After" travel runs upon approval of new timing plans.

687.3.04 Final Timing Report

687.3.04.01 Project Performance Measures – Before/After Analysis

After all necessary field adjustments have been made to the timing and approval of the operation is provided by the Engineer, provide a qualitative assessment of the signal system timing by comparing the "Before" travel time runs with the "After" travel time runs. A Cost/Benefit analysis shall be included as part of the signal timing assessment. *If travel runs are removed from scope at the Kickoff Meeting*, the Final Timing Report will consist of the final timing database printouts.

Develop project performance measures containing, but not limited to the following data:

- Emissions (NOx, CO, VOC)
- Total travel time (Before and After)
- Stops/Delays (including side streets)
- Fuel consumption
- Benefit/Cost Ratio
- Additional Measures of Effectiveness as directed by the Engineer

Submit a copy of the final local and system timing plans to the Engineer. Use the back-up routine provided in the Department's signal system software to make a back-up of the system database. Supply this back-up electronic version to the Engineer (Include updated and final signal timing software models and any/all electronic database). Leave the data key in the cabinet drawer. Data keys should be labeled with the applicable controller firmware version and date.

687.3.04.02 As-Built Timing Database

Provide a final timing database that includes all changes made from field fine tuning.

687.3.04.03 As-Built Software Model

Provide a final software model that includes all changes made from field fine tuning.

687.3.04.04 Data Keys/Loadable Media

Provide data keys or other loadable media as approved by the Engineer for each intersection in the project.

Submit one (1) electronic (.PDF) copy of the Final Timing Report to the Engineer for review and approval. Obtain written approval of the Final Timing Report prior to submitting all approved project files to the Engineer.

687.3.05 Training

687.3.05.01 Overview

*Training **may** be requested by the Engineer, Department or Local Jurisdiction.*

Provide instructors and all material for training Department and Local Agency personnel in the development and implementation of timing plans specifically related to this project. Submit training course outline to the Engineer for approval at least thirty (30) days prior to the proposed scheduled start of the training session. Obtain written approval of the course content prior to the final scheduling of the training session. Scheduling of training shall be cordinated with the Department and Local agency.

Develop and supply all necessary manuals, displays, class notes, visual aids, and/or other instructional materials as required to provide the training programs described herein. Bind the manuals individually in loose-leaf binders and provide up to ten (10) copies depending on the requested size of the class. Check with the Engineer to determine the final number of required manuals.
Unless otherwise specified, conduct the training session at the District office. Provide up to sixteen (16) hours of training over multiple days. Training could consist of both classroom and field sessions. The dates and times of the training will be approved by the Engineer. The Engineer will determine the personnel who will attend each training session.

687.3.05.02 Recommended Content

Provide a course to instruct the procuring and maintaining agency in the procedures used in the development and implementation of timing plans for this project.

Items to *possibly* be covered:

- Data required for input into the signal timing program and what the signal timing program does with the data
- Program limitations
- Timing plan methodology for the respective project
- Explanation of timing plan development process related to the signal timing program
- Terminology employed, data required, reports and graphics available for evaluation, definition of MOE's, interpretation of results
- Explanation of timing plan development process related to the respective project
- Reasoning for the evaluation and selection of cycle length, splits and offsets and why this is an iterative process
- Conversion of the timing plan output from the signal timing program to the input utilized by the system and controller database
- Installation of the timing plans for manual mode use and TOD use
- Fine-tuning a signal system
- Fine-tuning intersections with light vehicular traffic but high pedestrian demand
- Development of parameters to be used in the database to implement traffic responsive operation based on the data collected from the field
- Data collection to support traffic responsive operation
- Fine-tuning traffic responsive operation
- Reporting project performance measures
- Conducting a Benefit to Cost (B/C) analysis

687.4 Measurement

687.4.01 Construction Contracts

GDOT will provide one (1) data key or other media per controller, as noted in section 687.3.04 Final Timing Report, if one is not currently in the cabinet. The data key shall remain with maintaining local agencies. Consultant shall update data key with current timing plan(s).

Traffic signal timing, complete and accepted is measured for payment per Lump Sum.

- Traffic Signal Timing
- Training

687.5 Payment

687.5.01 Construction Contracts

Traffic signal timing complete and accepted is measured for payment per Lump Sum. Price and payment is full compensation for all materials, labor, tools, equipment, supplies, testing, and incidentals to complete the item of work

Payment will be made under:

Item No. 687	Traffic Signal Timing	Lump Sum

The GDOT Construction Project Manager, at his/her discretion may choose to pay a partial payment based upon percent complete.

Table 687-3 Signal Timing Flowchart (Workflow)

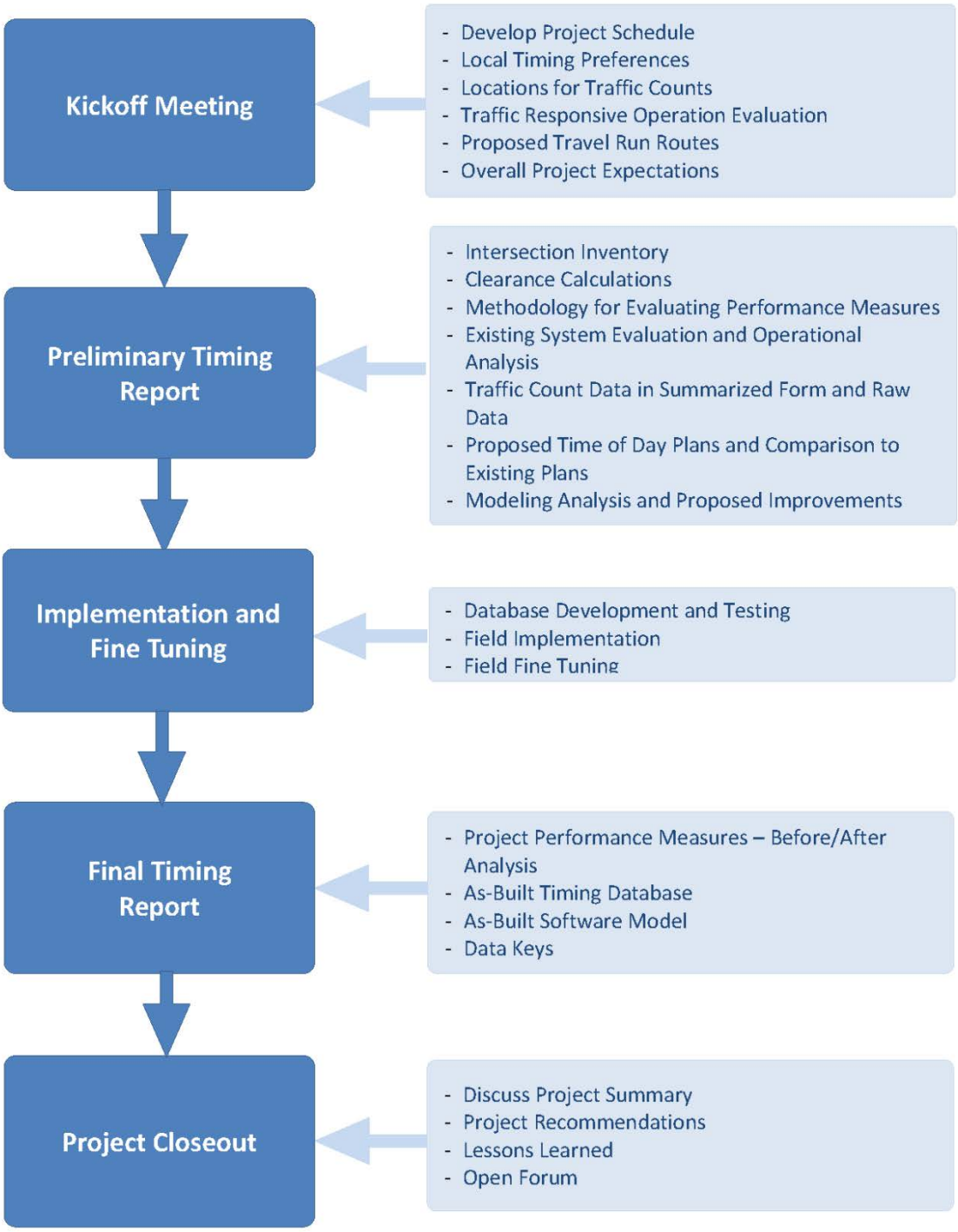

TABLE 687-4 List of Intersections and Count TOD

INTERSECTIONS

Jeffersonville Road at Millerfield Road
Jeffersonville Road at Emery Hwy

COUNTS

Collect TMC's at the locations listed above, during the days and hours listed below. Any changes to the days and times listed below shall be approved by the Engineer before proceeding.

Monday, Tuesday or Wednesday – TMC's at above listed intersections. Designated times: 7:00-9:00 am, 11:00-1:00 pm. and 4:00-6:00 pm.

Monday, Tuesday or Wednesday – 24-hour bi-directional traffic counts on all roadways of the intersections listed above.

Exhibit 687-1

XX System - XX County

Intersection: _____ Field Review Date _____

Recorded by: _____ Intersection # _____

Phasing:

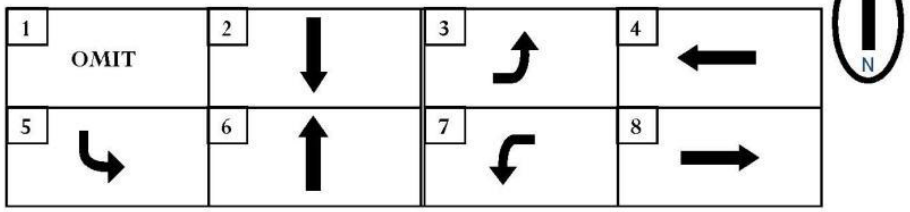

Left Turn Treatment / Right Turn

	Prot/Perm	Bay Length	Bay Length
Northbound	Perm	122'	---
Southbound	Prot/Perm	141'	---
Eastbound	Prot/Perm	337'	---
Westbound	Prot/Perm	420'	393'

Misc. Comments

2070 Controller; 332 Cabinet
NB & SB loops can't be seen in the field--possibly paved over
(calls being picked up in cabinet by detector cards)
Peds on Phase 2 and Phase 8
All signal and ped heads are good
Wireless Antenna on strain pole closest to the cabinet
In Free Operation based on TOD (15:56)
30 seconds slower than www.time.gov

Geometrics

	Clearance	Speed
Northbound	58'	40
Southbound	88'	40
Eastbound	62'	35
Westbound	63'	35

Ped Data

	Crosswalk	Heads	PB	* X walk Dx
Northbound	---	---	---	---
Southbound	---	Yes	Yes	6'/60'/5'
Eastbound	---	Yes	Yes	14'/50'/4'
Westbound	---	---	---	---

Detectors

Approach	Size	Type	Dx from SB	Lane
WB	4' x 60'	Quad Pres	---	Left
WB	4' x 60'	Quad Pres	---	Thru
NB	6' x 6'	Setback	318'	Thru
EB	4' x 60'	Quad Pres	---	Thru
EB	4' x 60'	Quad Pres	---	Left
SB	6' x 6'	Quad Pres	---	Left
SB	6' x 6'	Setback	287'	Thru

* Note: X walk Dx is a running cummulative distance that includes: button to curb, curb to curb, and curb to button

Exhibit 687-2

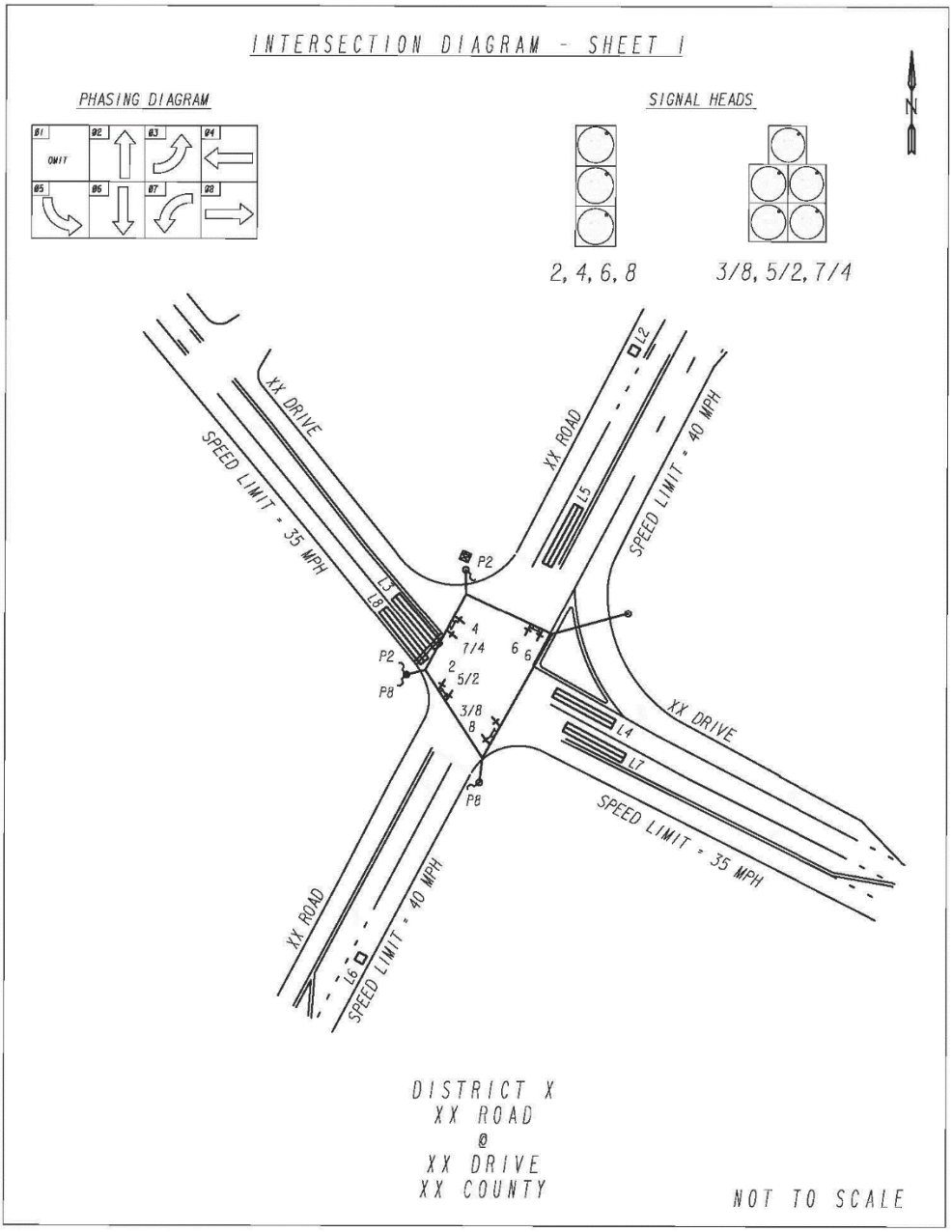

Exhibit 687-2 cont'd

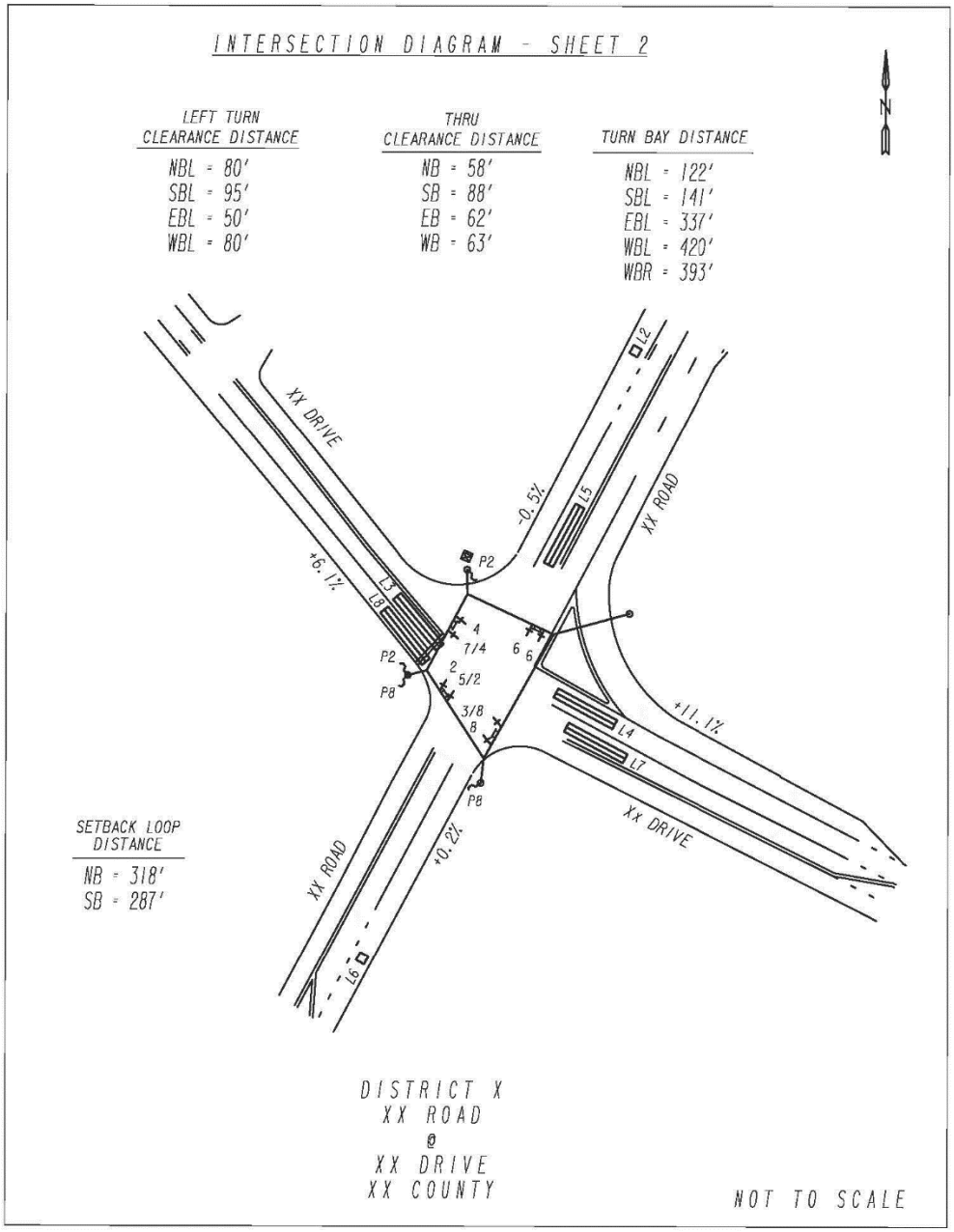

Exhibit 687-2 cont'd

General Information	Signal Number
	Owner
	Maintained By
	Primary Route
	Secondary Route
	Primary Rte Alt Name
	Secondary Rte Alt Name
	City
	County
	District
	Signal System
	Master or Local
	Latitude
	Longitude
Cabinet	Serial Number
	Manufacturer
	Install Date
	Type
Controller	Type
	Actuation
	Software/Firmware Build
	Serial Number
	Manufacturer
	Install Date
Conflict Monitor	Type
	Serial Number
	Manufacturer
	Install Date
Battery Backup	Type
	Serial Number
	Manufacturer
	Install Date
Pedestrian Signals	Quantity
	Type
	Bulb Type
	Indication Type
	Size
	Mounted On
	Direction/Phase
	Serial Number
	Manufacturer
	Install Date
Signals	Type
	Quantity
	Bulb Type
	Usage
	Direction/Phase
	Casing Color
	Backplate
	Enforcement
	Material
	Mounted On
	Section Size
	Manufacturer
	Visor
	Serial Number
	Install Date
Signs	Quantity
	MUTCD Designation
	Direction/Phase
	Serial Number
	Install Location
	Install Date

Load Switches	Type
	Quantity
	Install Date
Trouble Log	Type
	Location
	Install Date
Signal Plan	Type
	Location
	Plan Date
Communication	Type
	Serial Number(s)
	IP Address
	Port Number
	Phone Number
	Drop Number
	Manufacturer(s)
	Install Date
Loop Detection	Quantity
	Type
	Number of Channels
	Phase
	Serial Number
	Manufacturer
	Install Date
Other Detection	Quantity
	Type
	Activation Mechanism
	Direction/Phase
	Serial Number
	Manufacturer
	Install Date
Pedestrian Detection	Quantity
	Type
	Indication
	Direction/Phase
	Install Location
	Serial Number
	Install Date
Pedestrian Signs	Quantity
	Type
	MUTCD Designation
	Direction/Phase
	Install Location
	Serial Number
	Install Date
Support Poles	Quantity
	Type
	Height
	Owner
	Serial Number
	Manufacturer
	Install Date
Flashers	Quantity
	Type
	Bulb Type
	Direction/Phase
	Activation Mechanism
	Install Date
	Power Source
	Usage
	Serial Number
	Manufacturer

Exhibit 687-3

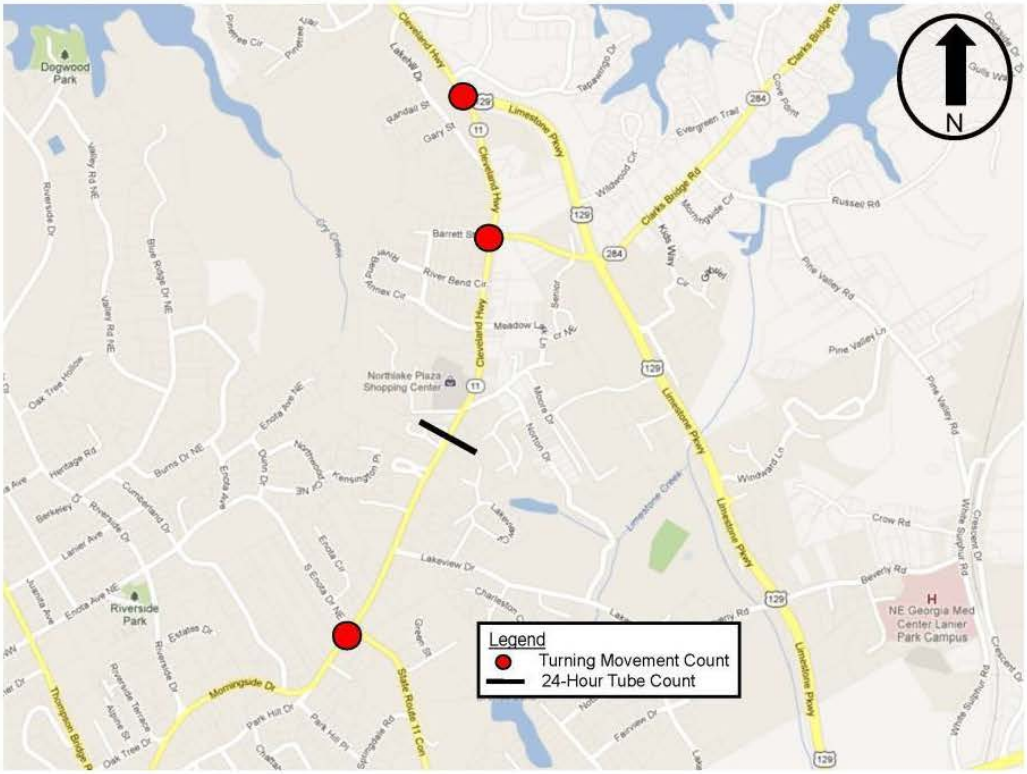

Exhibit 687-4

METHODOLOGY REPORT
XX ROAD

CSCMQ-0006-00(742)
METRO ATLANTA
P.I. No. 0006742

Methodology for Clearance Intervals

Local controller timings will be developed for each of the three (3) intersections in this project. Table 3 details the clearance interval values that will be used for each signal phase.

Table 3
Clearance Interval Values

Phase Interval	Interval Value
Walk Interval	4 seconds typical and 7 seconds for intersections near schools or with high pedestrian traffic.
Flashing Don't Walk	Distance from the curb to curb divided by 3.5 feet/second (typically) or 3.0 feet/second for schools and elderly Concurrent phases do not need to be equal.
Yellow Interval	t + (V/(2A + 64.4g)) Concurrently terminating phases should be equal (set to higher.
All Red Interval	(W + L) / V Concurrently terminating phases should be equal (set to higher. Max red interval = 3.0 seconds
	t = perception reaction time (1 second) *V* = posted speed in feet/second *A* = deceleration rate (10 feet/second/second) *W* = intersection width measured from stop bar to edge of through travel lane *L* = length of vehicle (assume 20 feet) *g* = The average of three field-measured approach grades, at the stop bar, midway to the setback loop, and at the setback loop, will be used to determine approach grades. This value will then be divided by 100.

In addition, left-turn clearance calculations will be based on a turning speed of 25 mph. Through movements will be based on the posted speed limit.

5

Exhibit 687-5

SIGNAL TIMING GUIDELINES

The City of XX Traffic Engineering will use the following guidelines for traffic signal timing. These guidelines are not a substitute for good engineering judgement.

1. Compute minimum green intervals by applying Greenshields formula (t = 4+2n) to a minimal queue associated with off-peak conditions. Round off to nearest second as necessary. Typical assignments are as follows:

   4 sec – Turn Arrows and Low speed (*30 MPH) minor street approaches controlled by 40 foot presence loops; T intersections.

   6 sec – Medium speed (*40 MPH) minor street approaches.

   8 sec – High speed (>40 MPH) minor street approaches.

   12 sec – Medium speed (*40 MPH) main line approaches.

   15 sec – High speed (>40 MPH) main line approaches.

   Set the maximum variable initial greater than the maximum time needed to clear the queue of vehicles that has accumulated between the stop line and the loop.

2. Passage time is computed as follows:

   Distance from stop line/(Speed Limit*1.47)

3. Determine the maximum green time using the procedures described in chapter nine of the Highway Capacity Manual.

4. Compute the yellow change interval according to the Institute of Transportation Engineers recommended procedure.

$$Y = t + \frac{v}{2a \pm 64.4g}$$

Where: Y = length of yellow interval to nearest 0.1 second
t = driver perception/reaction time, recommended as 1.0 second.
v = approach speed, in fps (MPH*1.47), taken as the 85th percentile speed or speed limit.
a = deceleration rate stopping, recommended as 10 ft/sec2.
g = grade of approach, in percent divided by 100 (downhill is negative)

Note: The City of XX Traffic Engineering will use the 85th percentile speed to enter the table. If a speed study is not available, the speed limit is used. Use 25 MPH for all turning movements.

Exhibit 687-5 cont'd

5. The red clearance interval will follow the Institute of Transportation Engineers recommended procedure.

$$R = \frac{W + L}{V}$$

Where: R = length of red clearance, to the nearest 0.1 second
W = width of intersection, in feet, measured from the nearside stop line to the far edge of the conflicting traffic lane along the actual vehicle path.
L = length of vehicle, recommended as 20 feet
V = speed of the vehicle through the intersection, in ft/sec

Note: The City of XX Traffic Engineering will use the 85th percentile speed to enter the table. If a speed study is not available, the speed limit is used. Use 25 MPH for all turning movements.

6. Calculate the "Pedestrian Clearance" for each leg at which pedestrian crossings are permitted. This is the crossing width divided by the walking speed (4.0 ft/sec, or 3 – 3.5 ft/sec in areas where school children or handicapped pedestrians may be present). This value is used for the flashing "DON'T WALK" interval. The "WALK" interval is 4 to 7 seconds as determined by minimum pedestrian volumes. These values are used for actuated pedestrian phases with or without pedestrian signals.

   Crossing leg refers to the leg of the intersection the data applies.

   Crossing width is the distance for the pedestrian to cross from the point at which he would wait for a crossing opportunity to the middle of the furthest travel lane.

   Fixed time controllers or phases on recall, adjust the vehicle minimum green interval to "Pedestrian Minimum Green" (Pedestrian clearance plus Walk). This value is useful since it represents the minimum green split (less vehicle clearance) that must be allowed for in coordination.

   Note: If the roadway is 28 feet wide or less, then the crossing width is from the edge of pavement to the edge of pavement. Pedestrian Clearance shall not be less than 8 seconds.

Exhibit 687-6

Volume
File Name: C:\Users\Owner\Desktop\New folder\#A US29 WEST OF PATTERSON ROAD.tf2
Start Date: 11/7/2012
Start Time: 12:00:00 AM
Site Code: A
Station ID: A
Location 1: US29 WEST OF PATTERSON ROAD
Location 2:

Date	Time	EB		WB	
11/7/2012	12:00 AM	20		22	
11/7/2012	12:15 AM	12		22	
11/7/2012	12:30 AM	15		20	
11/7/2012	12:45 AM	14	61	19	83
11/7/2012	01:00 AM	14		8	
11/7/2012	01:15 AM	6		13	
11/7/2012	01:30 AM	10		10	
11/7/2012	01:45 AM	11	41	8	39
11/7/2012	02:00 AM	3		11	
11/7/2012	02:15 AM	10		8	
11/7/2012	02:30 AM	6		11	
11/7/2012	02:45 AM	6	25	8	38
11/7/2012	03:00 AM	5		6	
11/7/2012	03:15 AM	8		10	
11/7/2012	03:30 AM	7		6	
11/7/2012	03:45 AM	6	26	9	31
11/7/2012	04:00 AM	17		10	
11/7/2012	04:15 AM	5		20	
11/7/2012	04:30 AM	21		16	
11/7/2012	04:45 AM	29	72	19	65
11/7/2012	05:00 AM	30		34	
11/7/2012	05:15 AM	52		39	
11/7/2012	05:30 AM	66		78	
11/7/2012	05:45 AM	62	210	80	231
11/7/2012	06:00 AM	66		107	
11/7/2012	06:15 AM	98		162	
11/7/2012	06:30 AM	142		230	
11/7/2012	06:45 AM	130	436	252	751
11/7/2012	07:00 AM	158		266	
11/7/2012	07:15 AM	177		292	
11/7/2012	07:30 AM	252		297	
11/7/2012	07:45 AM	274	861	282	1137
11/7/2012	08:00 AM	252		316	
11/7/2012	08:15 AM	264		292	
11/7/2012	08:30 AM	256		277	
11/7/2012	08:45 AM	246	1018	214	1099
11/7/2012	09:00 AM	198		212	
11/7/2012	09:15 AM	213		219	
11/7/2012	09:30 AM	184		189	
11/7/2012	09:45 AM	176	771	205	825
11/7/2012	10:00 AM	176		166	
11/7/2012	10:15 AM	156		170	
11/7/2012	10:30 AM	166		182	
11/7/2012	10:45 AM	160	658	179	697
11/7/2012	11:00 AM	154		156	
11/7/2012	11:15 AM	174		165	

Exhibit 687-7

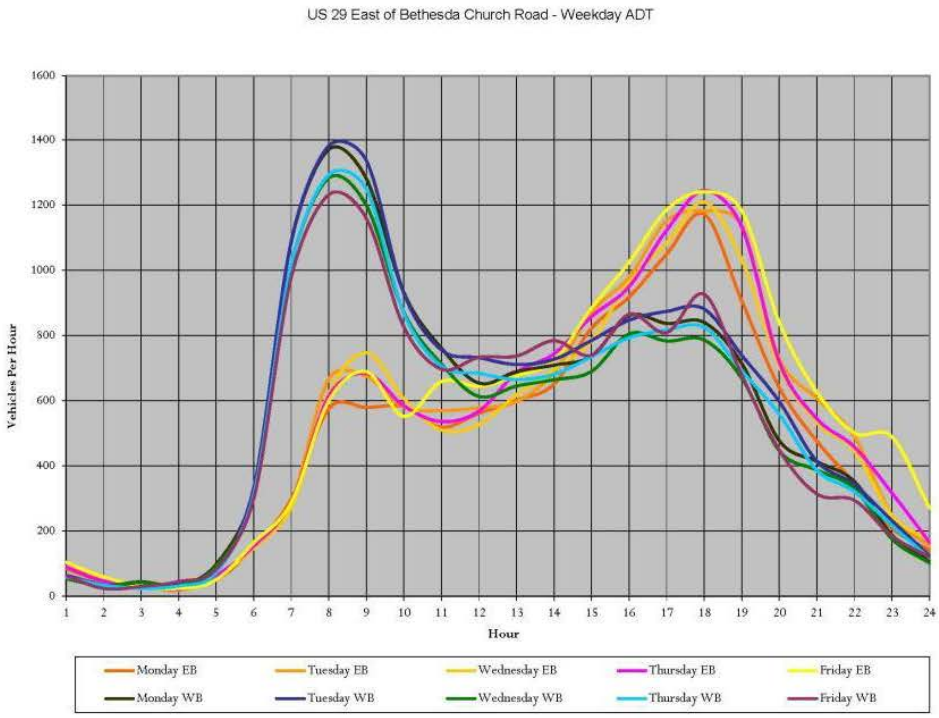

Exhibit 687-8

All Traffic Data Services, Inc
1336 Farmer Road
Conyers, Ga 30012
404-374-1283

File Name : #1 Patterson Rd @ US 29 Lawrenceville Hwy AM
Site Code :
Start Date : 11/7/2012
Page No : 2

	PATTERSON RD Southbound					US 29 LAWRENCEVILLE HWY Westbound					PATTERSON RD Northbound					US 29 LAWRENCEVILLE HWY Eastbound					
Start Time	Left	Thru	Rght	Peds	App. Total	Left	Thru	Rght	Peds	App. Total	Left	Thru	Rght	Peds	App. Total	Left	Thru	Rght	Peds	App. Total	Int. Total
Peak Hour Analysis From 07:30 AM to 09:15 AM - Peak 1 of 1																					
Peak Hour for Entire Intersection Begins at 07:30 AM																					
07:30 AM	0	0	0	0	0	15	244	0	0	259	**55**	0	74	0	**129**	0	226	17	0	243	631
07:45 AM	0	0	0	0	0	18	258	0	0	276	42	0	**81**	0	123	0	**258**	16	0	274	673
08:00 AM	0	0	0	0	0	**19**	**270**	0	0	**289**	47	0	76	0	123	0	250	**25**	0	**275**	**687**
08:15 AM	0	0	0	0	0	17	261	0	0	278	27	0	69	0	96	0	244	11	0	255	629
Total Volume	0	0	0	0	0	69	1033	0	0	1102	171	0	300	0	471	0	978	69	0	1047	2620
% App. Total	0	0	0	0		6.3	93.7	0	0		36.3	0	63.7	0		0	93.4	6.6	0		
PHF	.000	.000	.000	.000	.000	.908	.956	.000	.000	.953	.777	.000	.926	.000	.913	.000	.948	.690	.000	.952	.953
Cars	0	0	0	0	0	64	980	0	0	1044	167	0	294	0	461	0	949	66	0	1015	2520
% Cars	0	0	0	0	0	92.8	94.9	0	0	94.7	97.7	0	98.0	0	97.9	0	97.0	95.7	0	96.9	96.2
Trucks	0	0	0	0	0	5	53	0	0	58	4	0	6	0	10	0	29	3	0	32	100
% Trucks	0	0	0	0	0	7.2	5.1	0	0	5.3	2.3	0	2.0	0	2.1	0	3.0	4.3	0	3.1	3.8

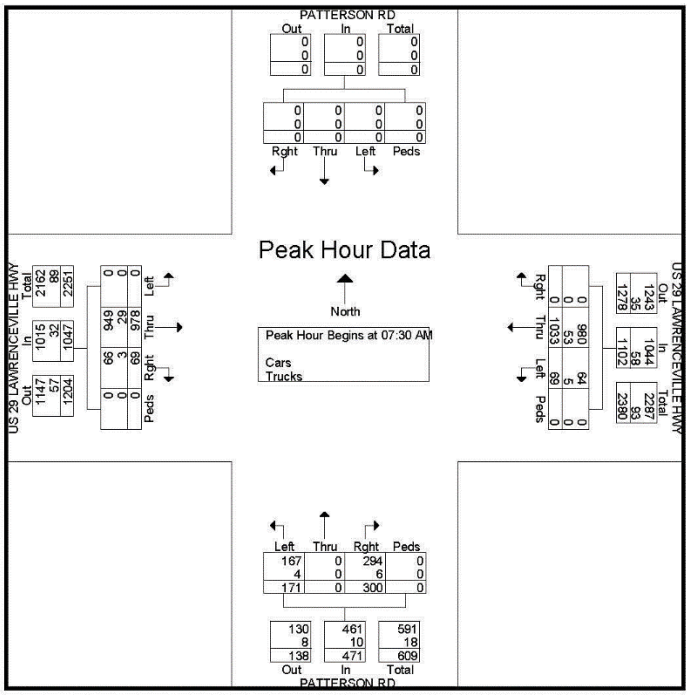

Exhibit 687-9

Shallowford Road		Briarcliff Road	
AM Peak Plan		AM Peak Plan	
Cycle Length		Cycle Length	
Before	After	Before	After
120"	120"	120"	120"
MD Peak Plan		MD Peak Plan	
Cycle Length		Cycle Length	
Before	After	Before	After
120"	110"	Free	Free
PM Peak Plan		PM Peak Plan	
Cycle Length		Cycle Length	
Before	After	Before	After
120"	130"	120"	130"

Exhibit 687-10

SR 11 Business 4/26/2013

1: SR 11/Limestone Pkwy & SR 11 Business

Lane Group	WBL	WBR	NBT	NBR	SBL	SBT
Lane Configurations						
Volume (vph)	5	183	175	19	626	670
Ideal Flow (vphpl)	1900	1900	1900	1900	1900	1900
Grade (%)	3%		-2%			5%
Storage Length (ft)	0	0		195	310	
Storage Lanes	1	1		1	1	
Taper Length (ft)	25	25		25	60	
Lane Util. Factor	1.00	1.00	1.00	1.00	1.00	1.00
Frt		0.850		0.850		
Flt Protected	0.950				0.950	
Satd. Flow (prot)	1743	1560	1881	1599	1725	1816
Flt Permitted	0.950				0.580	
Satd. Flow (perm)	1743	1560	1881	1599	1053	1816
Right Turn on Red		Yes		Yes		
Satd. Flow (RTOR)		199		36		
Link Speed (mph)	45		40			45
Link Distance (ft)	2012		1703			1068
Travel Time (s)	30.5		29.0			16.2
Peak Hour Factor	0.42	0.92	0.80	0.53	0.86	0.82
Adj. Flow (vph)	12	199	219	36	728	817
Shared Lane Traffic (%)						
Lane Group Flow (vph)	12	199	219	36	728	817
Turn Type		Perm		Perm	pm+pt	
Protected Phases	4		2		1	6
Permitted Phases		4		2	6	
Detector Phase	4	4	2	2	1	6
Switch Phase						
Minimum Initial (s)	4.0	4.0	12.0	12.0	4.0	12.0
Minimum Split (s)	11.0	11.0	19.0	19.0	11.0	19.0
Total Split (s)	15.0	15.0	80.0	80.0	45.0	125.0
Total Split (%)	10.7%	10.7%	57.1%	57.1%	32.1%	89.3%
Yellow Time (s)	4.0	4.0	4.2	4.2	4.0	4.2
All-Red Time (s)	2.5	2.5	2.3	2.3	2.5	2.3
Lost Time Adjust (s)	0.0	0.0	0.0	0.0	0.0	0.0
Total Lost Time (s)	6.5	6.5	6.5	6.5	6.5	6.5
Lead/Lag			Lag	Lag	Lead	
Lead-Lag Optimize?						
Recall Mode	None	None	C-Max	C-Max	None	C-Max
Act Effct Green (s)	7.0	7.0	92.2	92.2	120.0	120.0
Actuated g/C Ratio	0.05	0.05	0.66	0.66	0.86	0.86
v/c Ratio	0.14	0.75	0.18	0.03	0.72	0.52
Control Delay	66.4	25.7	9.5	3.5	7.2	4.0
Queue Delay	0.0	0.0	0.0	0.0	0.0	0.0
Total Delay	66.4	25.7	9.5	3.5	7.2	4.0
LOS	E	C	A	A	A	A
Approach Delay	28.0		8.7			5.5
Approach LOS	C		A			A
Queue Length 50th (ft)	11	0	53	0	118	139
Queue Length 95th (ft)	15	#86	114	1	168	178

AM Peak 140 second cycle

Exhibit 687-10 cont'd

SR 11 Business 4/26/2013

1: SR 11/Limestone Pkwy & SR 11 Business

Lane Group	WBL	WBR	NBT	NBR	SBL	SBT
Internal Link Dist (ft)	1932		1623			988
Turn Bay Length (ft)				195	310	
Base Capacity (vph)	106	282	1238	1065	1088	1557
Starvation Cap Reductn	0	0	0	0	0	0
Spillback Cap Reductn	0	0	0	0	0	0
Storage Cap Reductn	0	0	0	0	0	0
Reduced v/c Ratio	0.11	0.71	0.18	0.03	0.67	0.52

Intersection Summary			
Area Type:	Other		
Cycle Length: 140			
Actuated Cycle Length: 140			
Offset: 125 (89%), Referenced to phase 2:NBT and 6:SBTL, Start of 1st Green			
Natural Cycle: 60			
Control Type: Actuated-Coordinated			
Maximum v/c Ratio: 0.75			
Intersection Signal Delay: 8.3		Intersection LOS: A	
Intersection Capacity Utilization 64.3%		ICU Level of Service C	
Analysis Period (min) 15			
# 95th percentile volume exceeds capacity, queue may be longer.			
Queue shown is maximum after two cycles.			

Splits and Phases: 1: SR 11/Limestone Pkwy & SR 11 Business



AM Peak 140 second cycle

Exhibit 687-10 cont'd

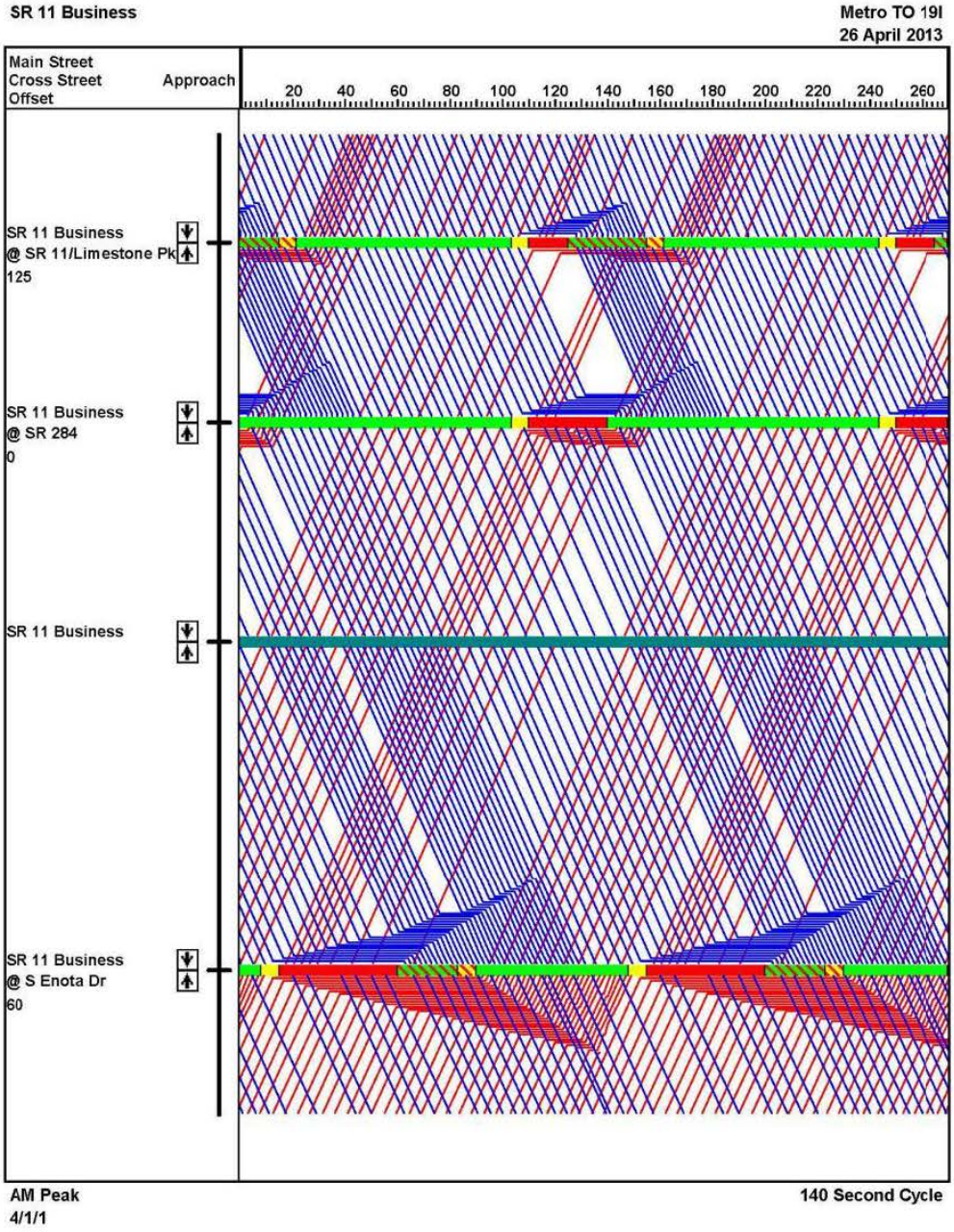

Exhibit 687-11

Part I – Office Tests

Local Intersection Timing Plan Checklist

Project Name: XX Road Signal Timing
Project Number: Task Order XX
Client: City of XXX
Project Manager: _____

Intersection: _____
Checked by: _____ Date: _____
Reviewed by: _____ Date: _____
Approved by: _____ Date: _____

1. Intersection Phases

___ Verified vehicle and pedestrian phases in use correspond to phases shown on the intersection diagram.

	1	2	3	4	5	6	7	8
Vehicular Phases								
Initialization Status								
Pedestrian Phases								

2. Phasing Sequence

Describe any non standard phasing sequence (non standard phasing orders, exclusive phases). List once only if phasing sequence does not change by time of day; otherwise list for each plan along with the description of the sequence and purpose of the non-standard sequence. Examples are lead/lag, phase-omit by time of day, split phasing and exclusive pedestrian phases.

Non Standard Sequence	Description	Plan	Purpose

Exhibit 687-12

Part II – Field Tests

Local Intersection Timing Plan Checklist

Project Number: Task Order XX
Project Name: XX Road Signal Timing
Client: City of XX
Project Manager: _____

Intersection: _____
Checked by: _____ Date: _____
Reviewed by: _____ Date: _____
Approved by: _____ Date: _____

1. Intersection Phases (Check box for phases in use)

___ Verified phases in use correspond to phases shown on intersection diagram and signal heads.

	1	2	3	4	5	6	7	8
Vehicular Phases								
Pedestrian Phases								

2. Basic Intersection Operations

___1. Verified all vehicular movements are detected by controller.
___2. Verified all vehicular phases are served and signal heads turned on in the correct sequence.
___3. Verified all pedestrian pushes are detected by controller.
___4. Verified the pedestrian signal heads are turned on (walk, flashing don't walk, and still don't walk) in the correct sequence.
___5. Set controller time clock to the correct date and time.
___6. For each test criteria, indicated whether the plan passes or fails the test criteria below in the corresponding boxes.

Date: November 1, 2002
First Use Date: January 1, 2003
Revised: April 27, 2004
First Use Date: June 1, 2004
Revised: October 31, 2005
Revised: October 23, 2008
Revised: December 14, 2010
Revised: April 15,2011

DEPARTMENT OF TRANSPORTATION
STATE OF GEORGIA

SPECIAL PROVISION

Section 700—Grassing

Delete Section 700 and substitute the following:

700.1 General Description

This work includes preparing the ground, furnishing, planting, seeding, fertilizing, sodding, and mulching disturbed areas within the Right-of-Way limits and easement areas adjacent to the right-of-way as shown on the Plans except as designated by the Engineer to remain natural.

700.1.01 Definitions

General Provisions 101 through 150.

700.1.02 Related References

A. Standard Specifications

Section 160—Reclamation of Material Pits and Waste Areas

Section 163—Miscellaneous Erosion Control Items

Section 718—Wood Fiber

Section 822—Emulsified Asphalt

Section 882—Lime

Section 890—Seed and Sod

Section 891—Fertilizers

Section 893—Miscellaneous Planting Materials

Section 895—Polyacrylamide

B. Referenced Documents

QPL 33

QPL 84

700.1.03 Submittals

Submit manufacturer's product expiration date along with written instructions to ensure proper application, safety, storage, and handling of Polyacrylamide products used in The Work.

Section 700—Grassing

700.2 Materials

Use materials that meet the requirements of the following Specifications:

Material	Section
Wood Fiber Mulch	718.2
Agricultural Lime	882.2.01
Seed	890.2.01
Sod	890.2.02
Fertilizer	891.2.01
Plant Topsoil	893.2.01
Mulch	893.2.02
Inoculants	893.2.04
Tackifiers	QPL 33
Anionic Polyacrylamide	QPL 84 & Section 895

A. Seeds

Whenever seeds are specified by their common names, use the strains indicated by their botanical names.

B. Water

Obtain the water for grassing from an approved source. Use water free of harmful chemicals, acids, alkalies, and other substances that may harm plant growth or emit odors. Do not use salt or brackish water.

C. Agricultural Lime

Agricultural lime rates will be based on a laboratory soil test report. The Contractor is responsible for ensuring the tests are performed by an approved laboratory. Provide a copy of test results to the Engineer. Refer to Section 882 Lime and GSP 18 of the Sampling and Testing Inspection manual for additional information on rates, use, handling and sampling procedures.

D. Fertilizer Mixed Grade

Fertilizer analysis and rates will be based on a laboratory soil test report. The Contractor is responsible for ensuring the tests are performed by an approved laboratory. Provide a copy of test results to the Engineer. Refer to Section 891 Fertilizer and GSP 18 of the Sampling and Testing Inspection manual for additional information on rates, use, handling and sampling procedures.

E. Mulch

Use straw or hay mulch according to Subsection 700.3.05.G.

Use wood fiber mulch in hydroseeding according to Subsection 700.3.05.F.1.

700.2.01 Delivery, Storage, and Handling

General Provisions 101 through 150.

700.3 Construction Requirements

700.3.01 Personnel

General Provisions 101 through 150.

700.3.02 Equipment

Use grassing equipment able to produce the required results.

Section 700—Grassing

Never allow the grading (height of cut) to exceed the grassing equipment's operating range.

A. Mulch Material Equipment

Use mulching equipment that uniformly cuts the specified materials into the soil to the required control depth.

B. Hydroseeding Equipment

For hydroseeding equipment, see Subsection 700.3.05.F.

700.3.03 Preparation

General Provisions 101 through 150.

700.3.04 Fabrication

General Provisions 101 through 150.

700.3.05 Construction

Follow the planting zones, planting dates, types of seed, seed mixtures, and application rates described throughout this Section. The Engineer has the authority to alter the planting dates as set forth by a period of 2 weeks. This 2-week period may be applied to either the beginning of the specified planting and/or to the end of the end of the specified planting season.

In general:

- Obtain the Engineer's approval before changing the ground cover type.
- Do not use annual rye grass seeds with permanent grassing.
- Follow the planting zones indicated on the Georgia State Planting Zone Map, below.
- Sod may be installed throughout the year, weather permitting.
- For permanent grassing, apply the combined amounts of all seeds for each time period within each planting zone and roadway location listed in the Seeding Table, below. Do not exceed the amounts of specified seed.

Section 700—Grassing

Planting Zone Map



Section 700—Grassing

NON-NATIVE GRASS SEEDING TABLE 1
(Temporary and Permanent Seed Types for Shoulders, Medians and Slopes 3:1 or Flatter)

Common Name	Botanical Name	Class/Type	Rate/Acre	Planting Zone	Planting Dates
Common Bermuda Grass (Hulled)	*Cynodon dactylon*	Required Permanent Grass	10 (11)	1	April 16 – August 31
Common Bermuda Grass (Unhulled)			10 (11)		
Common Bermuda Grass (Hulled)	*Cynodon dactylon*	Required Permanent Grass	10 (11)	2,3,4	April 1 – October 15
Common Bermuda Grass (Unhulled)			10 (11)		
Bahaia Grass	*Paspalum motatum*		10 (11)		
Rye Grass, Millet, Cereal Grass (Oats)	*Lolium penne spsp. Multiflorum, Echinochloa cursgalli, Avena sativa*	Temporary Grass	50 (56)	1	September 1- April 15
Rye Grass, Millet, Cereal Grass (Oats)	*Lolium penne spsp. Multiflorum, Echinochloa cursgalli, Avena sativa*	Temporary Grass	50 (56)	2,3,4	October 16- March 31

Section 700—Grassing

NON-NATIVE SEEDING TABLE 2

(Temporary and Permanent Seed Types

for back slopes, fill slopes and areas which will not be subject

to frequent mowing, slopes steeper than 3:1)

Common Name	Botanical Name	Class/Type	Rate/Acre	Planting Zone	Planting Dates
Interstate Lespedeza	*Lespedeza sericea*	Permanent Grass	50(56)	1,2	March 1 – August 31
Weeping Lovegrass	*Eragrostis curvula*	Temporary Grass	10(11)		
Interstate Lespedeza	*Lespedeza sericea*	Permanent Grass	75(84)	1,2	September 1- February 28
Tall Fescue	*Festuca arundinacea*	Temporary Grass	50(56)		
Interstate Lespedeza	*Lespedeza sericea*	Permanent Grass	50(56)	3,4	April 1 – October 31
Weeping Love Grass	*Eragrostis curvula*	Temporary Grass	10(11)		
Interstate Lespedeza	*Lespedeza sericea*	Permanent Grass	50(56)	3,4	November 1 – March 31
Weeping Love Grass	*Eragrostis curvula*	Temporary Grass	10(11)		

Section 700—Grassing

NATIVE GRASS SEEDING TABLE 3

For Non-mowable Slopes or Areas Designated as Permanent Native Grass Plots.

Plant native seed mixes on back slopes, fill slopes and areas which will not be subject to frequent mowing (slopes steeper than 3:1).

Common Name	Botanical Name	Class/Type	Rate/Acre	Planting Zone	Planting Dates
Canada Wild Rye	*Elymus canadensis*	Cool Season	Minimum 2 (2)	1,2,3,4	October 31 - March 31
Virginia Wild Rye	*Elymus virginicus*	Cool Season	Minimum 2 (2)	1,2,3,4	October 31 - March 31
Bottle-brush Grass	*Hystrix patula*	Cool Season	Minimum 2 (2)	1,2,3,4	October 31 - March 31
Little Bluestem	*Schizachyrium scoparium* (*Andropogon scoparius*)	Warm Season	Minimum 2 (2)	1,2,3,4	March31- August 31
Indiangrass	*Sorghastrum nutans*	Warm Season	Minimum 2 (2)	1,2,3,4	March 31- August 31
Eastern Gama Grass	*Tripsacum dactyloides*	Warm Season	Minimum 2 (2)	1,2,3,41,2,3,4	March 31- August 31
Rice Cut Grass	*Leersia oryzoides*	Warm Season	Minimum 2 (2)	1,2,3,4	March 31- August 31
Deertongue	*Panicum clandestinum*	Warm Season	Minimum 2 (2)	1,2,3,4	March 31- August 31
Switchgrass	*Panicum virgatum*	Warm Season	Minimum 2 (2)	1,2,3,4	March 31- August 31
Woolgrass	*Scirpus cyperinus*	Cool Season	Minimum 2 (2)	1,2,3,4	October 31 - March 31
River Oats	*Chasmanthium latifolium*	Cool Season	Minimum 2 (2)	1,2,3,4	October 31 - March 31
Purple Top	Tridens flavus	Warm Season	Minimum 2 (2)	1,2,3,4	March 31- August 31

See plan sheets/plant lists for detailed native seed mix combinations to be applied at a minimum rate total of 10 (11) lbs per acre (kg/hectare) for each combined mix. If the mix is not provided in the plan sheets, use a minimum of 3 species based on planting dates shown above.

Section 700—Grassing

HERBACEOUS PLANT SEEDING TABLE 4

(Approved for Riparian Mitigation or for Seed Mixes

on Slopes Steeper than 3:1-Requiring Permanent Planting)

Common name	Botanical name	Class/type	Rate/Acre	Planting Zone	Planting Dates
Joe Pye Weed	*Eupatorium fistulosum*	Herbaceous Pe	Minimum 2 (2)	1,2,3,4	September 1 – May 1
Ironweed	*Vernonia novaboracensis*	Herbaceous Perennial	Up to 10(11)	1,2,3,4	March 1 - August 31,
White snakeroot	*Ageratina altissima (Eupat rugosum)*	Herbaceous Perennial	Up to 10(11)	1,2,3,4	September 1 – May 1
Swamp milkweed	*Asclepias incarnata*	Herbaceous Perennial	Up to 10(11)	1,2,3,4	March 1 - August 31,
Frost aster	*Aster pilosus (Symphyotric*	Herbaceous Perennial	Up to 10(11)	1,2,3,4	September 1 – May 1
Partridge pea	*Chamaecrista fasciculata (fasciculata)*	Herbaceous Perennial	Up to 10(11)	1,2,3,4	March 1 - August 31,
Lance-leaf coreopsis	*Coreopsis lanceolata*	Herbaceous Perennial	Up to 10(11)	1,2,3,4	September 1 – May 1
Tall coreopsis	*Coreopteris tripteris*	Herbaceous Perennial	Up to 10(11)	1,2,3,4	September 1 – May 1
Boneset	*Eupatorium perfoliatum*	Herbaceous Perennial	Up to 10(11)	1,2,3,4	September 1 – May 1
Sneezeweed	*Helenium autumnale*	Herbaceous Perennial	Up to 10(11)	1,2,3,4	September 1 – May 1
Swamp sunflower	*Helianthus angustifolius*	Herbaceous Perennial	Up to 10(11)	1,2,3,4	March 1 - August 31,
Fringed loosestrife	*Lysimachia ciliata*	Herbaceous Perennial	Up to 10(11)	1,2,3,4	September 1 – May 1
Wild bergamot	*Monarda fistulosa*	Herbaceous Perennial	Up to 10(11)	1,2,3,4	September 1 – May 1
Mountain mint	*Pycnanthemum tenuifolium*	Herbaceous Perennial	Up to 10(11)	1,2,3,4	September 1 – May 1
Black-eyed susan	*Rudbeckia hirta*	Herbaceous Perennial	Up to 10(11)	1,2,3,4	September 1 – May 1
Goldenrod	*Solidago nemoralis*	Herbaceous Perennial	Up to 10(11)	1,2,3,4	September 1 – May 1
Butterfly Weed	*Aesclepias tuberose*	Herbaceous Perennial	Up to 10(11)	1,2,3,4	March 1 - August 31,

For riparian mitigation, use Table 4 for approved riparian herbaceous seed types in combination with Table 3 of native grass seeds..Riparian seed mixes should incorporate a mix of 60% native grass types (see Table 3) and 40% native herbaceous types (see Table 4) applied at a minimum rate total of 10 (11) lbs per acre (kg/hectare) for each combined mix.

Section 700—Grassing

TABLE 5: TEMPORARY GRASS - SPECIES, SEEDING RATES AND PLANTING DATES

Species	Rates per 1000 sq. ft.	Rates per Acre	Planting Date By Zone		
			1 & 2	2	3 & 4
Rye (Grain)	3.9 lbs	168 lbs	8/1 - 11/30	8/15 - 12/1	9/1 - 2/28
Ryegrass	0.9 lbs	40 lbs	8/1 - 11/30	9/1 - 12/15	9/15 - 1/1
Rye & Annual Lespedeza	0.6 lbs 0.6 lbs	28 lbs 24 lbs	3/1 - 4/1	2/1 - 3/1	2/1 - 3/1
Weeping Lovegrass	0.1 lbs	4 lbs	3/15 - 6/15	3/15 - 7/15	3/15 - 7/15
Sudangrass	1.0 lbs	60 lbs	4/1 - 8/31	4/1 - 8/31	3/15 - 8/1
Browntop Millet	1.1 lbs	50 lbs	4/1 - 6/30	4/1 - 7/15	4/1 - 7/15
Wheat	3.9 lbs	168 lbs	9/1 - 12/31	9/1 - 12/31	9/15 - 1/31

When stage construction or other conditions prevent completing a roadway section continuously, apply temporary grassing to control erosion. Temporary grassing is used to stabilize disturbed areas for more than sixty (60) calendar days. Temporary grass may be applied any time of the year, utilizing the appropriate seed species and application rate as shown in the chart above. Apply mulch to areas planted in temporary grass at the rate of ¾ inch to 1.5 inches. Do not place slope mats on areas planted in temporary grass.

Section 700—Grassing

A. Ground Preparation

Prepare the ground by plowing under any temporary grass areas and preparing the soil as follows:

1. Slopes 3:1 or Flatter

   On slopes 3:1 or flatter, plow shoulders and embankment slopes to between 4 in and 6 in (100 mm and 150 mm) deep.

   Plow front and back slopes in cuts to no less than 6 in (150 mm) deep. After plowing, thoroughly disk the area until pulverized to the plowed depth.

2. Slopes Steeper Than 3:1

   Serrate slopes steeper than 3:1 according to Plan details when required.

   On embankment slopes and cut slopes not requiring serration (sufficient as determined by the Engineer), prepare the ground to develop an adequate seed bed using any of the following methods as directed by the Engineer:

   - Plow to a depth whatever depth is practicable.
   - Use a spiked chain.
   - Walk with a cleated track dozer.
   - Scarify.

   Disking cut slopes and fill slopes is not required.

3. All Slopes

   a. Obstructions

      Remove boulders, stumps, large roots, large clods, and other objects that interfere with grassing or may slide into the ditch.

   b. Topsoil

      Spread topsoil stockpiled during grading evenly over cut and fill slopes after preparing the ground.

      Push topsoil from the top over serrated slopes. Do not operate equipment on the face of completed serrated cuts.

4. Riparian Areas, Stream Restoration Areas, and Wetland and Stream Mitigation Areas

   For Permanent Grassing in riparian areas, stream restoration areas, and wetland and stream mitigation areas, provide the minimum ground preparation necessary to provide seed to soil contact. Riparian areas may also be seeded using the no-till method. The no-till method is defined by planting permanent grass seeds using a drill-type seeder over existing vegetation without plowing or tilling soil. Ensure that existing vegetation is less than 3 inches in height (this may be achieved by mowing or using a mechanical string trimmer).

B. Grassing Adjacent to Existing Lawns

When grassing areas adjacent to residential or commercial lawns, the Engineer shall change the plant material to match the type of grass growing on the adjacent lawn. The Contract Unit Price will not be modified for this substitution.

C. Temporary Grassing

Apply temporary grassing according to Subsection 163.3.05.F. Determine lime requirements by a laboratory soil test. Refer to seeding Table 5 for species, amounts of seed and planting dates.

In March or April of the year following planting and as soon as the weather is suitable, replace all areas of temporary grass with permanent grass by plowing or overseeding using the no-till method. If the no-till method is used, ensure that temporary grass is less than 3 inches in height (this may be achieved by mowing). Additional mulch will be required only if the temporary grass does not provide adequate mulch to meet the requirements of Subsection 700.3.05.G, "Mulching."

Temporary grass, when required, will be paid for according to Section 163.

Projects that consist of asphalt resurfacing with shoulder reconstruction and/or shoulder widening: Type II Wood Fiber Blanket is used to stabilize disturbed areas, no till seeding will be used when permanent grassing is applied and the areas will not be re-disturbed.

Section 700—Grassing

D. Applying Agricultural Lime and Fertilizer Mixed Grade

Apply and mix lime and fertilizer as follows:

1. Agricultural Lime

   Uniformly spread agricultural lime on the ground at the approximate rate determined by the laboratory soil test.

   A. Agricultural Lime may be used as filler material in mixed grade fertilizer in lieu of inert material. The use of agricultural lime as filler material is to be shown on the fertilizer bag or invoice from the supplier. Do not deduct any amount of fertilizer when lime is used as filler.

2. Fertilizer Mixed Grade

   Uniformly spread the fertilizer selected according to Subsection 700.2.D over the ground or by use of hydroseeding.

   For bid purposes base estimated quantities on an initial application of 400 lb/acre of 19-19-19.

3. Mixing

   Before proceeding, uniformly work the lime and fertilizer into the top 4 in (100 mm) of soil using harrows, rotary tillers, or other equipment acceptable to the Engineer.

   On cut slopes steeper than 3:1, other than serrated slopes, reduce the mixing depth to the maximum practical depth as determined by the Engineer.

   Omit mixing on serrated slopes.

4. Riparian Areas, Stream Restoration Areas, and Wetland and Stream Mitigation Areas

   Omit the application of lime and fetilizer within riparian areas.

E. Seeding

Prepare seed and sow as follows:

1. Inoculation of Seed

   Inoculate each kind of leguminous seed separately with the appropriate commercial culture according to the manufacturer's instructions for the culture.

   When hydroseeding, double the inoculation rate.

   Protect inoculated seed from the sun and plant it the same day it is inoculated.

2. Sowing

   Weather permitting, sow seed within 24 hours after preparing the seed bed and applying the fertilizer and lime.

   Sow seed uniformly at the rates specified in the seeding tables. Use approved mechanical seed drills, rotary hand seeders, hydroseeding equipment, or other equipment to uniformly apply the seed. Do not distribute by hand.

   To distribute the seeds evenly sow seed types separately, except for similarly sized and weighted seeds. They may be mixed and sown together.

   Do not sow during windy weather, when the prepared surface is crusted, or when the ground is frozen, wet, or otherwise non-tillable.

3. Overseeding

   Temporary grass areas that were prepared in accordance with Subsection 700.3.05.A, may be overseeded using the no-till method. The no-till method is defined by planting permanent grass seeds using a drill-type seeder over existing temporary grass without plowing or tilling soil and in accordance with Subsection 700.3.05.C.

4. Riparian Seed Mix shall be used when specified in the Plans. A mix of at least three (3) species from Seeding Table 3 (Native Grasses) and at least two (2) species from Seeding Table 4 (Approved Riparian Mitigation - Herbaceous Plants). The seed, shall be applied as Permanent Grassing within those areas designated on the Plans. The kinds of seed, shall be used according to the appropriate Planting Dates given in the tables.

F. Hydroseeding

Hydroseeding may be used on any grassing area. Under this method, spread the seed, fertilizer, and wood fiber mulch in the form of a slurry. Seeds of all sizes may be mixed together. Apply hydroseeding as follows:

1. Use wood fiber mulch as a metering agent and seed bed regardless of which mulching method is chosen. Apply wood fiber mulch at approximately 500 lbs/acre (560 kg/ha).
2. Prepare the ground for hydroseeding as for conventional seeding in Subsection 700.3.05.A.
3. Use specially designed equipment to mix and apply the slurry uniformly over the entire seeding area.
4. Agitate the slurry mixture during application.
5. Discharge slurry within one hour after being combined in the hydroseeder. Do not hydroseed when winds prevent an even application.
6. Closely follow the equipment manufacturer's directions unless the Engineer modifies the application methods.
7. Mulch the entire hydroseeded area according to Subsection 700.3.05.F.1, above, and Subsection 700.3.05.G, below.
8. Riparian Areas, Stream Restoration Areas, and Wetland and Stream Mitigation Areas may be hydroseeded. When hydroseeding in these areas only use water, seed and wood fiber mulch.

G. Mulching

Except as noted in Subsection 700.3.05.B and Subsection 700.3.05.C, apply mulch immediately after seeding areas as follows:

Areas with permanent grass seed and covered with slope mats or blankets will not require mulch.

Evenly apply straw or hay mulch between 3/4 in and 1-1/2 in (20 mm and 40 mm) deep, according to the texture and moisture content of the mulch material.

Mulch shall allow sunlight to penetrate and air to circulate as well as shade the ground, reduce erosion, and conserve soil moisture. If the type of mulch is not specified on the Plans or in the Proposal, use any of the following as specified.

1. Mulch with Tackifier

   Apply mulch with tackifier regardless of whether using ground or hydroseeding equipment for seeding.

   a. Mulch uniformly applied manually or with special blower equipment designed for the purpose. When using a blower, thoroughly loosen baled material before feeding it into the machine so that it is broken up.
   b. After distributing the mulch initially, redistribute it to bare or inadequately covered areas in clumps dense enough to prevent new grass from emerging (if required).

      Do not apply mulch on windy days.
   c. Apply enough tackifier to the mulch to hold it in place. Immediately replace mulch that blows away.

      If distributing the mulch by hand, immediately apply the tackifier uniformly over the mulched areas.

      - Tackifier: Use a tackifier listed in the Laboratory Qualified Products Manual shall be used at the manufacturer's recommended rates.
2. Walked-in-Mulch

   Apply walked-in-mulch on slopes ranging in steepness from 5:1 to 2:1 and treat as follows:

   a. Immediately walk it into the soil with a cleated track dozer. Make dozer passes vertically up and down the slope.
   b. Where walked-in-mulch is used, do not roll or cover the seeds as specified in Subsection 700.3.05.E.3.

3. Apply only wheat straw mulch on Riparian Areas, Stream Restoration Areas, and Wetland and Stream Mitigation Areas after they have been seeded. The wheat straw mulch is to be applied with a maximum thickness of 1 inch.

H. Sod

Furnish and install sod in all areas shown on the Plans or designated by the Engineer.

1. Kinds of Sod

   Use only Common Bermudagrass (Cyndon dactylon) or one of the following Bermudagrass varieties:

Section 700—Grassing

Tifway 419
Tifway II
Tift 94
Tifton 10
Midlawn
Midiron
GN-1
Vamont

No dwarf Bermuda types shall be used. Sod shall be nursery-grown and be accompanied with a Georgia Department of Agriculture Live Plant License Certificate or Stamp. Sod shall consist of live, dense, well-rooted material free of weeds and insects as described by the Georgia Live Plant Act.

2. Type And Size Of Sod:

   Furnish either big roll or block sod. Ensure that big roll sod is a minimum of 21 inches wide by 52 feet long. Minimum dimensions for block sod are 12 inches wide by 22 inches long. Ensure all sod consists of a uniform soil thickness of not less than 1 inch.

3. Ground Preparation

   Excavate the ground deep enough and prepare it according to Subsection 700.3.05.A to allow placing of sod. Spread soil, meeting the requirements of Subsection 893.2.01, on prepared area to a depth of 4 inches.

4. Application Of Lime And Fertilizer

   Apply lime and fertilizer according to Subsection 700.3.05.D within 24 hours prior to installing sod.

5 Weather Limitation

   Do not place sod on frozen ground or where snow may hinder establishment.

6. Install Sod

   Install Sod as follows:

   - Place sod by hand or by mechanical means so that joints are tightly abutted with no overlaps or gaps. Use soil to fill cracks between sod pieces, but do not smother the grass.
   - Stake sod placed in ditches or slopes steeper than 2:1 or any other areas where sod slipping can occur.
   - Use wood stakes that are at least 8 in (200 mm) in length and not more than 1 in (25 mm) wide.
   - Drive the stakes flush with the top of the sod. Use a minimum of 8 stakes per square yard (meter) to hold sod in place.
   - Once sod is placed and staked as necessary, tamp or roll it using adequate equipment to provide good contact with soil.
   - Use caution to prevent tearing or displacement of sod during this process. Leave the finished surface of sodded areas smooth and uniform.

7. Watering Sod

   After the sod has been placed and rolled or tamped, water it to promote satisfactory growth. Additional watering will be needed in the absence of rainfall and during the hot dry summer months. Water may be applied by Hydro Seeder, Water Truck or by other means approved by the Engineer.

8. Dormant Sod

   Dormant Bermuda grass sod can be installed. However, assume responsibility for all sod through establishment and until final acceptance.

9. Establishment

   Sod will be inspected by the Engineer at the end of the first spring after installation and at the time of Final Inspection. Replace any sod that is not live and growing. Any cost for replacing any unacceptable sod will be at the Contractor's expense.

Section 700—Grassing

I. Application of Nitrogen

Apply nitrogen at approximately 50 lbs/acre (56 kg/ha) when specified by the Engineer after plants have grown to 2 inches (50 mm) in height.

One application is mandatory and must be applied before Final Acceptance.

Apply nitrogen with mechanical hand spreaders or other approved spreaders capable of uniformly covering the grassed areas. Do not apply nitrogen on windy days or when foilage is damp.

Do not apply nitrogen between October 15 and March 15 except in Zone 4.

1. Riparian Areas, Stream Restoration Areas, and Wetland and Stream Mitigation Areas

   Do not apply nitrogen to these areas.

I. Application of Polyacrylamide (PAM)

1. Prepare soil according to project Plans and Specifications prior to applying PAM.
2. Apply PAM according to manufacturer's recommendations and the requirements listed herein.
3. Apply Polyacrylamide (PAM) to all areas that receive permanent grassing.
4. Apply PAM (powder) before grassing or PAM (emulsion) to the hydroseeding operation.
5. Use only anionic PAM.
6. Ensure that the application method provides uniform coverage to the target and avoids drift to non-target areas including waters of the state.
7. Achieve > 80% reduction in soil loss as measured by a rainfall simulator test performed by a certified laboratory (1 hour storm duration, 3 inches (75 mm) rainfall per hour).
8. Ensure uniform coverage to the target area and minimize drift to non-target areas. Apply anionic PAM to all cut and fill slopes, permanently grassed or temporarily grassed, either prior to grassing or in conjunction with hydroseeding operations. Mulch will not be eliminated.
9. Use application rates in accordance with manufacturer's instructions.
10. Do not exceed 200 lbs/acre/year (224 kg/ha/year).
11. Do not include polyacrylamide when planting in Riparian Areas, Stream Restoration Areas, and Wetland and Stream Mitigation Areas

700.3.06 Quality Acceptance

The Engineer may require replanting of an area that shows unsatisfactory growth for any reason at any time.

Except as otherwise specified or permitted by the Engineer, prepare replanting areas according to the Specifications as if they were the initial planting areas. Use a soil test or the Engineer's guidance to determine the fertilizer type and application rate, then furnish and apply the fertilizer.

700.3.07 Contractor Warranty and Maintenance

A. Plant Establishment

Before Final Acceptance, provide plant establishment of the specified vegetation as follows:

1. Plant Establishment

   Preserve, protect, water, reseed or replant, and perform other work as necessary to keep the grassed areas in satisfactory condition.

2. Watering

   Water the areas during this period as necessary to promote maximum growth.

3. Mowing

   Mow seeded areas of medians, shoulders, and front slopes at least every 6 months. Avoid damaging desirable vegetation.

In addition, mow as necessary to prevent tall grass from obstructing signs, delineation, traffic movements, sight distance, or otherwise becoming a hazard to motorists.

Do not mow lespedezas or tall fescue until after the plants have gone to seed.

4. Do not mow riparian areas, stream restoration areas, or wetland and stream mitigation areas after planting.

B. Additional Fertilizer Mixed Grade

Apply fertilizer based on the initial soil test report at half the recommended rate each spring after initial plant establishment. For bid purposes apply 200 lbs/acre of 19-19-19. Continue annual applications until Final Acceptance. This additional fertilizer will be measured and paid for at the Contract Unit Price for fertilizer mixed grade.

Do not apply additional fertilizer to Riparian Areas, Stream Restoration Areas, and Wetland and Stream Mitigation Areas.

C. Growth and Coverage

Provide satisfactory growth and coverage, ensuring that vegetation growth is satisfactory with no bare spots larger than1 ft^2 (0.1 m^2). Bare spots shall comprise no more than 1 percent of any given area. An exception is given for seed not expected to have germinated and shown growth at that time.

For wetland and stream mitigation areas, survival rates shall be 80% of typical required growth and coverage.

D. Permissible Modifications

When all Items of the work are ready for Final Acceptance except for newly planted repaired areas or other areas with insufficient grass, the Contractor may fill the eroded areas or treat bare areas with sod obtained, placed, and handled according to Subsection 700.3.05.H.

Carefully maintain the line and grade established for shoulders, front slopes, medians, and other critical areas.

Sod as described above will not be paid for separately, but will be an acceptable substitute for the satisfactory growth and coverage required under this Specification. These areas treated with sod are measured for payment under the Item for which the sod is substituted.

700.4 Measurement

A. Permanent Grassing

Permanent Grassing will be measured for payment by the acre (hectare).

B. Mulches

Straw or hay mulch applied to permanent grassing areas will be measured by the ton (megagram). Wood fiber mulch furnished by the Contractor for permanent grassing is not measured for separate payment.

C. Quantity of Sod

Sod is measured for payment by the number of square yards (meters) , surface measure, completed and accepted.

D. Water

Water furnished and applied to promote a satisfactory growth is not measured for payment.

E. Quantity of Lime and Fertilizer Mixed Grade

Lime and fertilizer are measured by the ton (megagram). Lime used as a filler in fertilizer is measured by the ton (megagram).

F. Quantity of Nitrogen Used for Permanent Grassing

Nitrogen is measured in pounds (kilograms) based on the weight of fertilizer used and its nitrogen content.

G. Replanting and Plant Establishments

No measurement for payment is made for any materials or work required under Subsection 700.3.06 and Subsection 700.3.07.

Section 700—Grassing

H. Temporary Grass

Temporary grass is measured for payment by the acre (hectare) according to Section 163.

I. Riparian Areas, Stream Restoration Areas, and Wetland and Stream Mitigation Areas

Riparian areas, Stream Restoration area, and Wetland and Stream Mitigation areas will be measured by the acre (hectare).

700.4.01 Limits

General Provisions 101 through 150.

700.5 Payment

As grassing and planting progress, the Contractor will receive full measurement and payment on regular monthly estimates provided the work complies with the Specifications.

A. Permanent Grassing

Permanent grassing will be paid for at the Contract Price per acre (hectare), complete and in place. Payment is full compensation for preparing the ground, seeding, wood fiber mulch, polyacrylamide, and providing plant establishment, soil tests and other incidentals.

B. Straw or Hay Mulch

Straw or hay mulch required for Permanent Grassing will be paid for according to Section 163.

C. Fertilizer Mixed Grade

Fertilizer mixed grade will be paid for at the Contract Price per ton (megagram). Payment is full compensation for furnishing and applying the material.

D. Lime

Lime will be paid for at the Contract Price per ton (megagram). Lime used as filler in fertilizer will be paid for per ton (megagram). Payment is full compensation for furnishing and applying the material.

E. Nitrogen

Nitrogen will be paid for at the Contract Price per pound (kilogram) of nitrogen content. Payment is full compensation for furnishing and applying the material.

F. Sod

Sod will be paid by the square yard (meter) in accordance with the following schedule of payments. Payment is full compensation for ground preparation, including addition of topsoil, furnishing and installing live sod, and for Plant Establishment.

1. 70% of the Contract Price per square yard will be paid at the satisfactory completion of the installation.
2. 20% of the Contract Price will be paid upon satisfactory review of sod which is healthy, weed free and viable at the inspection made at the end of the first spring after installation..
3. 10% of the contract price will be paid upon satisfactory review of sod that is healthy, weed free and viable at the Final Acceptance.

G. Temporary Grass

Temporary Grass will be paid for under Section 163.

H. Riparian Areas, Stream Restoration Areas, and Wetland and Stream Mitigation Areas

Section 700—Grassing

Riparian areas, Stream Restoration area, and Wetland and Stream Mitigation areas will be paid for at the Contract Price per acre (hectare), complete and in place. Payment is full compensation for preparing the ground, seeding, and providing plant establishment and other incidentals.

Payment will be made under:

Item No. 700	Permanent grassing	Per acre (hectare)
Item No. 700	Agricultural lime	Per ton (megagram)
Item No. 700	Fertilizer mixed grade	Per ton (megagram)
Item No. 700	Fertilizer nitrogen content	Per pound (kilogram)
Item No. 700	Sod	Per square yard (meter)
Item No. 700	Riparian, Stream Restoration, Wetland & Stream Mitigation	Per acre (hectare)

700.5.01 Adjustments

General Provisions 101 through 150.

September 30, 2015

DEPARTMENT OF TRANSPORTATION
STATE OF GEORGIA

STP00-3223-00 (002), STP00-3223-00 (004), BRMLB-3223-00 (006)
P.I. NUMBERS 342080, 351090 & 351095
Widening & Bridge Replacement – Jeffersonville Rd from Walnut Creek to Recreation Rd & Millerfield Rd to Bristol Dr;
Widening/Reconstruction – Jeffersonville Rd from SR 19/Emery Hwy to Walnut Creek
Jeffersonville Rd @Walnut Creek

MACON-BIBB COUNTY

SUPPLEMENTAL SPECIFICATION

Section 925—Traffic Signal Equipment

Delete Section 925 and substitute the following:

925.1 General Description

This section provides Specifications for a variety of traffic signal equipment. Ramp Meters are defined as a form of traffic signalization and all general provisions for traffic signalization are applicable unless otherwise noted in the Plans and Specifications.

925.1.1 Related References

A. Standard Specifications

Section 500—Concrete Structures

Section 639—Strain Poles for Overhead Sign and Signal Assemblies

Section 647—Traffic Signal Installation

Section 682—Electrical Wire, Cable and Conduit

Section 833—Joint Fillers and Sealers

Section 861—Piling and Round Timber

Section 870—Paints (Field Painting)

Section 915—Mast Arm Assemblies

Section 922—Electrical Wire and Cable

Section 923—Electrical Conduit

Section 926—Wireless Communication Equipment

Section 935—Fiber Optic System

Section 937 – Video Detection System

Section 939—Communications and Electronic Equipment

B. Referenced Documents

- National Electrical Manufacturers Association (NEMA) Standards Publication TS 1 Section 15

- NEMA Standard Publication TS 2- 1998
- Institute of Transportation Engineers (ITE)Vehicle Traffic Control Signal Heads Specification
- ITE Vehicle Traffic Control Signal Heads: Light Emitting Diode (LED)Circular Signal Supplement June 27, 2005 Specification
- ITE Vehicle Traffic Control Signal Heads – Part 3: Light Emitting Diode (LED) Vehicle Arrow Traffic Signal Modules Specification
- ITE Pedestrian Traffic Control Signal indications – Part 2: Light Emitting Diode (LED) Pedestrian Traffic Signal Modules Specification
- International Municipal Signal Association (IMSA) #20-1 Specification
- IMSA #20-4Specification
- IMSA #20-6Specification
- IMSA #50-2Specification
- IMSA #51-1Specification
- Underwriters Laboratory Inc. (UL) 94 Tests for Flammability of Plastic Materials for Parts in Devices and Appliances
- UL 493 Standard for Safety for Thermoplastic-Insulated Underground Feeder and Branch-Circuit Cables
- Traffic Signal Control Equipment Specifications, January 1989 edition and applicable addenda, State of California Business, Transportation & Housing Agency
- State of California Department of Transportation (CALTRANS) Qualified Products List (QPL) Controller Assemblies for the Model 170/2070 Traffic Controller,
- CALTRANS Transportation Electrical Equipment Specifications (TEES) August 16, 2002 and applicable addenda
- CALTRANS Transportation Electrical Equipment Specifications (TEES) March 12, 2009 and applicable addenda
- Georgia Department of Transportation Qualified Products List 75"Polyurethane Sealant for Inductive Loops"(American Society of Testing and Materials(ASTM) A36 Standard Specification for Carbon Structural Steel
- Georgia Department of Transportation Qualified Products List
- ASTM A53 Standard Specification for Pipe, Steel, Black and Hot Dipped, Zinc-Coated, Welded and Seamless
- ASTM A123 Standard Specification for Zinc (Hot-Dip Galvanized) Coating on Iron and Steel Products
- ASTM A153 Standard Specification for Zinc Coating (Hot Dip) on Iron and Steel Hardware
- ASTM A325 Standard Specification for Structural Bolts, Steel, Heat Treated, 120/105 ksi Minimum Tensile Strength
- ASTM A475 Standard Specification for Zinc-Coated Steel Wire Strand
- ASTM A572 Standard Specification for High- Strength Low-Alloy Columbium-Vanadium Structural Steel
- ASTM C1028 Standard Test Method for Determining the Static Coefficient of Friction of Ceramic Tile and Other Like Surfaces by the Horizontal Dynamometer Pull-Meter Method
- ASTM D256 Standard Test Methods for Determining the Izod Pendulum Impact Resistance of Plastics
- ASTM D638 Standard Test Methods for Tensile Properties of Plastics
- ASTM D785 Standard Test Method for Rockwell Hardness of Plastics: Electrical Insulating Materials
- ASTM D790 Standard Test Methods for Flexural Properties of Unreinforced and Reinforced Plastics and Electrical Insulating Materials
- ASTM D2444 Standard Test Methods for Determination of the Impact Resistance of Thermoplastic Pipe and Fittings by Means of a Tup
- ASTM D543 Standard Practices for Evaluating the Resistance of Plastics to Chemical Reagants
- Electronic Industries Standards (EIA)

925.2 Materials

925.2.1 General

A. Requirements

Ensure that the traffic signal equipment and materials meet the Plans and Specifications. All equipment furnished shall be new and meet the requirements of the following:

- Underwriter's Laboratory Incorporated (UL)
- Electronic Industries Association (EIA)
- National Electric Code (NEC)
- American Society of Testing and Materials (ASTM)
- American National Standards Institute (ANSI)
- International Municipal Signal Association (IMSA)
- National Electrical Manufacturers Association (NEMA)
- Applicable Standards, Specifications, and Regulations of the:

  Georgia Department of Transportation
  Traffic Signal Electrical Facility & NaviGAtor Support(TSEF) 935
  E. Confederate Avenue, Building 24
  Atlanta, GA 30316

B. Fabrication

General Provisions 101 through 150.

C. Acceptance

General Provisions 101 through 150.

D. Materials Warranty

- Provide to the District Signal Engineer or maintaining agency all manufacturers' warranties and guarantees for all signal equipment items listed in this document as well as any signal equipment listed in the Plans, except for state supplied equipment.
- Ensure that warranties and guarantees are consistent with those provided as customary trade practices; or as otherwise specified in the Plans, Standard Specifications, Supplemental Specifications or Special Provisions.
- Ensure, and state, that manufacturer's and supplier's warranties and guarantees are transferable to the agency or user that is responsible for traffic signal maintenance. And said warranties and guarantees are continuous throughout their duration.
- Ensure equipment provided under this specification shall be warranted by the manufacturer to be free from defects in materials and workmanship for a minimum period of two years from date of receipt or one year from date of acceptance of installation. The exception is the other materials stated in this specification which have longer warranty durations.
- Ensure the manufacturer will repair any faulty equipment during this period at no charge to the Department for parts, labor or shipping to and from the factory.

925.2.2 Type 2070 Controller Assemblies

A. Requirements

For 2070 controller cabinet assemblies, use 2070 controller units that meet the requirements of the following or are previously approved by TSEF:

- *Traffic Electrical Equipment Specifications (TEES)* published by the State of California Business, Transportation, and Housing Agency; Department of Transportation, current edition and current addenda
- *CALTRANS* Qualified Products List (QPL)
- *GDOT Qualified Products List (QPL)*
- Ensure the unit supplied is compatible with current GDOT licensed firmware.

The following Specifications augment the CALTRANS Specifications and take precedence over conflicting

CALTRANS Specifications.

1. Input/output (I/O) and Configuration:

   The 2070 Controller shall be supplied in one of the following configurations, as specified in the Plans (all modules are specified in TEES, but these configurations supersede the defined configurations in TEES):

   - 2070L: Provide Chassis, 2070-1B Single-Board CPU, 2070-2A Field I/O Module, 2070-3B Front Panel (8x40 display), 2070-4B 3.5-amp Power Supply, and a 2070-7A Module. This unit is intended for interfacing in Type 170E or ITS cabinets and shall provide the default input and output configuration as shown in Tables 925-13, 925-15 and 925-16 for ITS cabinets using a traffic signal application.
   - 2070E: Provide Chassis, 2070-1E Single-Board CPU, 2070-2A Field I/O Module, 2070-3B Front Panel (8x40 display), 2070-4B 3.5-amp Power Supply, and a 2070-7A Module. This unit is intended for interfacing in Type 170E or ITS cabinets and shall provide the default input and output configuration as shown in Tables 925-13, 925-15 and 925-16 for ITS cabinets using a traffic signal application.
   - 2070LC: Provide Chassis, 2070-1B Single-Board CPU, 2070-2B Field I/O Module, 2070-3B Front Panel (8x40 display), 2070-4B 3.5-amp Power Supply, and a 2070-7A Module. This unit is intended for interfacing in ITS cabinets only and shall provide the default input and output configuration as shown in Tables 925 -13, 925-15 and 925-16 for ITS cabinets using a traffic signal application.
   - 2070 LB: Provide Chassis, 2070-1B Single –Board CPU, 2070-2A Field I/O Module, 2070-3C Front Panel, 2070-4B 3.5-amp Power Supply, This unit is intended for interfacing in Type 170E or ITS cabinets where a user interface is not required and shall provide the default input and output configuration as shown in Tables 925 -13, 925-15 and 925-16 for ITS cabinets using a traffic signal application.
   - 2070 LN1: Provide Chassis, 2070-1B Single-Board CPU, 2070-2B Field I/O Module, 2070-3B Front Panel (8x40 display), 2070-4NB 3.5-amp Power Supply, 2070-8 NEMA Interface Module, and a 2070-7A Module. This unit is intended for interfacing in NEMA TS 1 or NEMA TS 2 Type 2 cabinets.
   - 2070 LN2: Provide Chassis, 2070-1B Single-Board CPU, 2070-2N Field I/O Module, 2070-3B Front Panel (8x40 display), 2070-4NB 3.5-amp Power Supply, and a 2070-7A Module. This unit is intended for interfacing in a NEMA TS 2 Type 1 cabinet.
   - 2070 LX: Provide Chassis, 2070-1C Single-Board CPU, 2070-2A Field I/O Module, 2070-3B Front Panel (8x40 display), and a 2070-4B 3.5-amp Power Supply. This unit is intended for interfacing in Type 170E or ITS cabinets and shall provide the default input and output configuration as shown in Tables 925-13, 925-15and 925-16 for ITS cabinets using a traffic signal application

2. Power Supply Modules:

   Either the 2070-4A, 2070-4B, 2070-4NA or 2070-4NB module shall be provided as required in the configuration requirements in the preceding Item. In addition to all requirements of the TEES, the power supplies shall be clearly marked as a "2070-4A", "2070-4B","2070-4NA", or "2070-4NB". The Vendor may supply a 2070-4A or 4NA power supply module in lieu of a 2070-4B or 4NB, as long as it is so marked and adds no additional cost to GDOT.

3. Documentation:

   Include with each controller, manuals that document the programming, operation, and maintenance of the unit. Include schematic drawings and pin assignment charts in the manuals for maintenance. Documentation shall include all components, including communications modules. Specific reference is made to section 1.2.4 Documentation in the CALTRANS TEES concerning required documentation to be provided.

4. Testing:

   Provide for complete testing of unit before it is shipped. If unit is shipped with applications firmware installed, it must be tested with the application (e.g. Traffic Signal Control). If a random sample of greater than 10 percent of the units tested is rejected then the total shipment shall be rejected and vendor will be responsible for all costs to test and repair all units provided.

B. Fabrication

General Provisions 101 through 150.

C. Acceptance

See Subsection 925.2.02 for compliance with CALTRANS QPL. Also see item 4 Testing in Section A above.

D. Materials Warranty:

(See Subsection 925.2.01 D for Materials Warranties).

925.2.3 Type 2070 Controller Subassemblies

A. Requirements

For 2070 controller subassemblies, use 2070 controller subassembly units that meet the requirements of the following or are previously approved by TSEF:

- *Traffic Electrical Equipment Specifications (TEES)* published by the State of California Business, Transportation, and Housing Agency; Department of Transportation, current edition and current addenda
- *CALTRANS* Qualified Products List (QPL)

The following Specifications augment the CALTRANS Specifications and take precedence over conflicting CALTRANS Specifications.

1. 2070 1B Module:

   The 2070 1B module may be supplied as a separate item to be used in all versions of the 2070 controller. The 2070 1B module shall be supplied complete with the operating software. Ensure it contains the required files to be compatible with the current GDOT applications software.

2. 2070 1E Module:

   The 2070 1E module may be supplied as a separate item to be used in all versions of the 2070 controller. The 2070 1E module shall be supplied complete with operating software. Ensure it contains the required files to be compatible with the current GDOT applications software.

3. 2070 1C Module:

   The 2070 1C module may be supplied as a separate item to be used in all versions of the 2070 controller. The 2070 1C module shall be supplied complete with operating software. Ensure it contains the required files to be compatible w ith the current GDOT applications software.

4. 2070 2A Field I/O Module

   The 2070 2A Field I/O module may be supplied as a separate item. The 2070 2A Field I/O module shall consist of the Field Controller Unit; Parallel Input/Output Ports; other Module Circuit Functions (includes muzzle jumper); Serial Communication Circuitry; Module Connectors C1S, C11S and C12S mounted on the module front plate; VDC Power Supply (+12VDC to + 5VDC) and required software. Ensure it contains any configuration jumpers to be compatible with current GDOT Applications software. Ensure the 2070 2A field I/O Module functions with a Model 2070L or 2070LB Controller Assembly and is compatible with current GDOT applications software.

5. 2070 2B Field I/O Module:

   The 2070 2B Field I/O module may be supplied as a separate item and consist of the Serial Communication Circuitry, DC power Supply, and Module Connector 12S mounted on the module front plate only. Ensure it contains any configuration jumpers to be compatible with current GDOT Applications software. Ensure the 2070 2B field I/O Module functions with a Model 2070 LC or 2070LN1 Controller Assembly and is compatible with current GDOT applications software.

6. 2070 2N Field I/O Module:

   The 2070 2N Field I/O module may be supplied as a separate item and provides a NEMA TS2-1compatible SDLC interface via Serial Port 3. AC power to the 2070 Unit and Fault Monitor Logic Output via 2070 Serial Port 5 and Output Frame Byte 9 Bit 6 to the NEMA TS2 Cabinet Monitor Unit (CMU). Ensure it contains any configuration jumpers to be compatible with current GDOT Applications software. Ensure the 2070 2N field I/O Module functions with a Model 2070 LN2 Controller Assembly and is compatible with current GDOT applications software.

7. 2070 3B Front Panel Display Module:

   The 2070 3B Display Module may be supplied as a separate item and provides a Front Panel Assembly controller, two keyboards, AUX switch alarm bell and an 8 line by 40 character display. This assembly shall also include a panel with latch assembly and two TSD #1 hinge attaching devices, assembly PCB, external serial port connectors, CPU active LED indicator, contrast adjustment knob, and Front Panel Harness. Ensure it contains any configuration jumpers to be compatible with current GDOT Applications software. Ensure the 2070 3B Front Panel Assembly Module functions with Models 2070L, 2070LC, 2070LN1 and 2070 LN2 Controller Assemblies and is compatible with current GDOT applications software. Ensure the hardware hinge attaching devices mate with existing 2070 assemblies. Ensure the Front Panel Harness is connected to the front panel via a removable connector. Ensure the front panel connector supports the aux switch.

8. 2070 4B Power Supply Module:

   The 2070 4B Power Supply Module may be supplied as a separate item and is an independent, self-contained module. Ensure that it is vented and cooled by convection only. Provide module that slides into power supply compartment from the back of the chassis and is attached to the Backplane mounting surface by its four TSD #3 Devices. Ensure the module supplies at least 3.5 amperes of +5VDC. Ensure the 2070 4B Power Supply Module is compatible with Models 2070L, 2070LB, and 2070LC Controller Assemblies and is compatible with current GDOT applications software. Ensure the connection harness PS 2 on existing units can be mated with the 4B module supplied. A 2070 4A Power Supply Module may be provided in place of a 4B module as long as it is labeled as such and there is no additional cost to GDOT. Ensure the module supplied is appropriately marked as a 4B or 4A module.

9. 2070 4NB Power Supply Module:

   The 2070 4NB Power Supply Module may be supplied as a separate item and is an independent self-contained module. Ensure that it is vented and cooled by convection only. Provide module that slides into power supply compartment from the back of the chassis and is attached to the Backplane mounting surface by its four TSD #3 Devices. Ensure the module supplies at least 3.5 amperes of +5VDC. Ensure the 2070 4B Power Supply Module is compatible with Models 2070 LN1 and 2070 LN2 Controller Assemblies and is compatible with current GDOT applications software. Ensure the connection harness PS 2 on existing units can be mated with the 4B module supplied. Ensure the 4NB power supply module supports the NEMA TS1 and TS2 Standards. A 2070 4A Power Supply Module may be provided in place of a 4B module as long as it is labeled as such and there is no additional cost to GDOT. Ensure the module supplied is appropriately marked as a 4NA or 4NB module.

10. 2070 6B Communications Module:

    The 2070 6B Communications Module is supplied as a separate item. The 6B communications module is a dual async/modem serial module. Ensure the module supports both Serial and modem FSK communications on both of two separate ports. Ensure the Modem data baud rate supports 0 to 9600. Ensure the module is configured to support FSK communications on the C2S connection. Ensure it contains any configuration jumpers to be compatible with current GDOT Applications software.

11. 2070 7A Communications Module:

    The 2070 7A Communications Module may be supplied as a separate item. The 7A communications module is a dual async serial communications module. Ensure the module supports serial communications on both ports. Ensure it contains any configuration jumpers to be compatible with current GDOT Applications software.

12. 2070 8 Field I/O Module:

    The 2070 8 Field I/O Module may be supplied as a separate item. The 8 Field I/O Module consists of the module chassis, module power supply, Field Control Unit Controller, parallel input/output ports, serial communications circuits and module connectors. Ensure the EX1 connector is provided with appropriate mating connections to interface with either 6B or 7A communications modules. Ensure the 2070 8 Field I/O module is provided with the appropriate mating connector to mate with the C12S connector on the 2070 2B Field I/O module. Ensure the 2070 8 Field I/O module functions as part of a Model 2070 LN1 controller.

13. 2070 D Panel:

    The 2070 D panel is supplied as a separate item. The 2070 D panel supports the inputs and outputs of the "D" connector provided on a 2070-8 module which is also part of a Model 2070 LN1. Ensure the "D" Connector panel supports all 61 pins with a connecting MS "D" connector and terminal blocks. Ensure the 2070 D Panel provides adequate cable length to allow attachment in an existing NEMA Cabinet. Ensure that the terminal blocks allow for two connections.

B. Fabrication

General Provisions 101 through 150.

C. Acceptance

(See Subsection 925.2.02 for compliance with CALTRANS QPL.)

D. Materials Warranty:

(See Subsection 925.2.01.D for Materials Warranties.)

925.2.4 Cabinet Assemblies

A. Requirements

In addition to the CALTRANS Specifications, ensure that the cabinet assembly conforms to the requirements listed below, which take precedence over conflicting CALTRANS Specifications.

1. Cabinet configuration:

   Supply cabinets in accordance with these Specifications. Equip the cabinets with auxiliary equipment as follows:

   a. Model 332 Cabinet:

      Lower input field termination panel

      1 – Model 242 DC Isolator in Slot 14 of Upper

      Input File 4 – Flash Transfer Relays

      2 – Model 204 Flashers

      1- 4 Position Power Strip

      1- Manual push button

      assembly 1- Auxiliary

      Output File

   b. Model 336S Cabinet:

      1- Model 242 DC Isolator in Slot 14 of Input File 4- Flash Transfer Relays

      4 - Model 204 Flashers

      1- 4 Position Power Strip

      1- Manual push button assembly

      1-"M" Base Adapter installed (Base Mount Cabinets Only)

      1-Aluminum Cover Plate for Cabinet Bottom (Pole Mount Cabinets Only)

   c. Model 337 Cabinet

      3-Flash Transfer Relays

      1-Model 204 Flasher

      1- Manual push button assembly

   d. Model 334 Cabinet with Auxiliary Output File for Ramp Metering Operations

      1- Output/PDA Type 3 with Model 206 24 Volt DC Power Supply with flash transfer relay

      1- Model 208 Monitor Unit

      1-Load Switch Model 200

      1- 4 Position Power Strip

      1- Lower Input Field Termination Panel

      1- Detector Test Switch Panel

NOTE: Include above components in cabinet at time of delivery.

Other auxiliary cabinet components such as controllers, monitors, load switches, etc. will be ordered as separate items.

2. Finish

   Use cabinets that have a bare aluminum finish (see Subsection 925.2.04.B.1 for controller-cabinet minimum fabrication Specifications).

3. Locks

   Equip the main cabinet door with locks that accept No. 2 Corbin keys. Provide two sets of keys with each cabinet. One set of keys is defined as one – No. 2 key and one - police panel key.

4. Power

   Equip the cabinet assemblies with a power distribution assembly to generate AC and DC power for the electronic components, except the DC power for the controller units. Provide the Model 332 and 336S cabinets with a DC isolator for stop time/flash sense, located in slot 14 of the input file.

5. Mounting

   Equip the cabinets for pole or base mounting, as specified in the Plans.

   a. Base Mount

      Supply Model 336S cabinets, when specified as base mount, with an "M" base-mounting adapter installed.

   b. Pole Mount

      Supply Model 336S or 337 cabinets, when specified as pole mount, with two exterior pole mounting brackets that allow for mounting on steel, concrete, and timber poles.

      Ensure that the bracket mounting holes are properly reinforced with metal plates of adequate size and strength, welded longitudinally across the inside depth of the cabinet.

      Ensure that the exterior-mounting bracket is shipped installed on the cabinet housing. Additionally, provide an aluminum plate, which covers the bottom cabinet opening.

6. Unused Phase Monitoring

   Provide odd-phase reds with ballast resistor (2K, 10 watt) dummy loads. Do not wire the cabinet to monitor pedestrian yellow indications. When auxiliary output file is used provide resistors for overlaps.

   Neatly lace, label and bundle the wiring from the signal monitor for pedestrian yellow monitoring on the back panel.

7. Red Monitoring

   Provide a connector and terminal assembly designated as P20 for monitoring the absence of red as an integral part of the output file. Terminate the connector and ensure compatible with the cable and C connector of a Type 2010 conflict monitor unit capable of monitoring the absence of red.

   Provide the pin assignments of the P20 connector and terminal assemble with the cabinet Plans.

   Ensure that the P20 connector is physically alike to the cable and connector of a Type 2010 conflict monitor unit to prevent the absence of red cable connector from being inserted into the P20 connector 180 degrees out of alignment.

   Submit details for programming of the unused red channels for approval.

8. Cabinet Light

   Include in each cabinet one fluorescent strip lighting fixture mounted inside the top front portion of the cabinet. Do not use screw in type fluorescent lamp. LED cabinet lighting is acceptable as an alternative provided it supplies an equivalent amount of light as the fluorescent installation.

   The fixture includes a cool white lamp, covered, and operated by a normal power factor, UL listed ballast.

   Install a door-actuated switch to turn on the cabinet light when either door is opened.

   Cabinet fan and light shall be fed from 15 amp equipment breaker.

9. Cabinet Interlock

   Do not install the interlock circuit, as detailed in the CALTRANS Specifications.

10. Laptop Shelf

    Equip each Model 334, 332, and 336S cabinet with a hinged aluminum shelf and integrated storage compartment mounted on the front door, inside the cabinet assembly. To allow proper ventilation throughout the cabinet, a sliding shelf/drawer shall not be mounted in the rack assembly. The shelf shall have a smooth, non-slip surface, sufficient for use as a writing platform and of sufficient size and stability to support a typical laptop computer when extended. The shelf shall have rounded or insulated edges that do not have the potential to harm the user. The shelf shall lock into place when folded for storage. Locking the shelf for storage and/or extending it for use shall not require the use of any tool.

11. Red Enable Board Cover

    The Output File Assembly shall implement a hinged, clear, polycarbonate cover to protect the Red Enable Board during normal operation. This cover shall be hinged on the left or right side. When closed, the side opposite the hinged shall be secured to the Output File Assembly without the use of any hardware or tool. When fully opened, the cover shall not inhibit the removal, replacement or configuration of the Red Enable Board. Removal and replacement o the Red Enable Board shall not require the removal of the protective cover.

12. Power Strip

    Equip each cabinet with a metal power strip (minimum of 4 outlets) to support AC power for external communications devices in cabinet. Provide metal strip that is mounted vertically on the rear rail. Ensure that the power strip may be used by block power supplies such that the block power supply does not block other outlets. Attach power strip to a permanent location that is easily accessible to devices in the rear of the cabinet. Provide hard wire connection to the Cabinet AC power, controlled by a 15 amp breaker. Do not use plug in power strips.

13. Surge Protection

    Equip each cabinet with devices to protect the control equipment from surges and over voltages.

    Design the surge protector panels to allow for adequate space for a wire connection and surge protector replacement without the removal of terminal blocks or panels. Provide surge protectors for the input sections as detailed below and as shown in the Input Terminal and Surge Arrestor Detail.

    Supply surge protectors that meet the following Specifications.

    a. AC Service Input

    - Include a surge protection unit for each cabinet on the AC service input that meets or exceeds the following requirements: Provide a hybrid type power line surge protection device on the cabinet service panel.
    - Install the protector between the applied line voltage and earth ground.
    - Use a surge protector capable of reducing the effect of lightning transient voltages applied to the AC line that conforms to the following:

Peak surge current for an 8 x 20 μs waveform:	20,000A for 20 occurrences
Clamp voltage @ 20,000A:	280V max
Maximum continuous operating current:	@ 120V / 60 Hz 10A
Series Inductance:	AC Line/AC Neutral - 200 micro henries
Response time:	Voltage never exceeds 280V during surge Spike
suppression for +/- 700 V spike:	+/- 40 V deviation from sine wave at all phases Angles between 0 and 180 degrees.

- Provide a protector that is modular and uses a 12 pin Beau connector with the following terminals:
  - Main Line (AC line first stage terminal)
  - Main Neutral (AC neutral input terminal)
  - Equipment Line In (AC line second stage input terminal, 10A)
  - Equipment Line Out (AC line second stage output terminal, 10A)
  - Equipment neutral out (neutral terminal to protected equipment)
  - GND (Earth connection)
- Supply a protector that is epoxy encapsulated in a flame-retardant material.
- Configure the Equipment Line Out to provide power to the Type 2070 and to the 24 V power supply.

b. AC+ Interconnect Cable Inputs

Use a surge protection device to protect each AC interconnect line as it enters the cabinet with a surge protection device that meets or exceeds the following requirements:

- 3-electrode gas tube type of surge arrestor
- Striking voltage of 300-500 V DC with a minimum holder over voltage of 155V DC
- A three terminal device, one of which is connected to ground, the other two are connected across each input respectively
- The units must meet the following minimum requirements:

Impulse breakdown:	Less than 100V in less than 1.1 μs at 10 kV/μs
Impulse breakdown balance:	0.01 microsecond (or less) difference at 10 kV/μs impulse
Energy application:	Withstands 20A AC for one (1) second applied ten (10) times at three (3) minute intervals on either section
Current rating:	10,000A (8 x 20 μs impulse)
Capacitance:	6 pF, line to ground

c. Inductive Loop Detector Inputs

Provide surge arrestors in the cabinet as shown in Table 925-5, Table 925-7 or Table 925-9 for the applicable cabinet. Protect each inductive loop detector channel input by an external surge protection device that meets or exceeds the following requirements:

- A three-terminal device, two (2) of which are connected across the signal inputs of the detector with the third connected to the chassis ground to protect against common mode damage.
- Instantly clamps differential mode surges (induced voltage across the loop detector input terminals) via a semiconductor array. The array appears as a low capacitance to the detector.
- Clamps common mode surges (induced voltage between the loop leads and ground) via solid state clamping devices.
- Withstand 25-100A surge current occurrences of a 10 x 700 μs waveform.
- Have the following clamp characteristics:

Maximum break over voltage:	170 V
Maximum on-stage clamping voltage:	3V
Response Time:	<5 ns
Off-stage leakage current:	<10 μA
Capacitance:	less than 220 pf

- Ensure that the unit also meets the following minimum requirements:

Peak surge current:	6 times
Differential mode:	400 A (8 x 20 ms)
Common mode:	1,000 A (8 x 20 ms)

Estimated occurrences:	500 @ 200 A
Response time:	40 ns
Input capacitance:	35 pF typical
Temperature:	-40° F to +185° F (-40° C to 85° C)
Mounting:	No. 10-32 x 3/8-inch (No. 5 x 10 mm) bolt
Clamp voltage @400 A diff.	Mode: 30 V max.
Clamp voltage @1,000 A comm.	Mode: 30 V max.

d. Signal Load Switches (Switchpacks)

Provide the output of all switchpacks in all output files and output/PDAs with metal oxide varistors (MOV) tied from the AC positive field terminal to the chassis ground to protect switchpacks from surges on the AC output lines

Ensure that these MOVs meet or exceed these requirements:

- Steady state sinusoidal voltage (RMS) rating at 50 to 60 Hz of at least 150 V at 77 ºF (25 °C)
- Steady state applied DC voltage rating of at least 200 V at 77 ºF (25 °C)
- Transient energy rating is of at least 80 J for a single impulse of 10/1,000 µs current waveform at 77 ºF (25 °C)
- Peak current rating of 6,500 A for a single impulse of 8/20 µs waveform with the rated continuous voltage applied
- Varistor voltage of at least 212 V at 1.0mA of DC current applied for the duration of 20 µs to 5s
- Clamping voltage of at least 395 V with an applied 8/20 µs impulse of 100 A
- Typical capacitance at a frequency of 0.1 to 1.0 MHz of 1600 pF
- Two-terminal device, one of which is connected to the AC output of the signal load switch on the output file terminals (backside of the field terminals) with the other connected to AC neutral

e. Communication Inputs

Protect low voltage communications input as it enters the cabinet with a solid-state surge protection unit that meets or exceeds these requirements:

- Dual pair (4-wire) module with a printed circuit board connector, double sided and gold plated for reliability
- Ability to mate with and be installed in a 10-circuit Buchanan connector Part Number PCB1B10S or Tyco Part Number 2-1437410-3 or equivalent
- Usable as two independent signal pairs
- The data circuits pass through the protection in a serial fashion
- C2 connector of the 2070 controller that terminates on the line side of the unit
- Communication field wires for this local side that terminate on the line side of the unit
- Ground terminals connected to power ground
- Ensure that the unit meets the following minimum requirements:

Peak surge current:	10 kA (8 x 20 µs wave shape)
	500A (10 x 700 µs wave shape)
Occurrences @ peak:	50 typical
Response time:	<1ns
Voltage Clamp:	8V line to line
Series Resistance:	24 Ω total
Temperature:	-40 ˚F (-40 ˚C) to +185 ˚F (85 ˚F)
Primary protector:	3 element gas tube 5kA, (8 x 20µs wave shape), per side
Secondary protector:	Silicon avalance, 1.5 kW minimum

f. Low Voltage DC Inputs

Provide an external surge protection device for each low voltage DC input channel which meets the same requirements as the communication inputs with the following exception of the Voltage clamp, which shall be 30 V line-to-line.

14. Type 2010 Signal Monitors:

a. Introduction

This Specification sets forth the minimum requirements for a rack-mountable, sixteen channel, solid-state 2010 Signal Monitor for Traffic Cabinet Assembly. Ensure that as a minimum, the Signal Monitor complies with all Specifications outlined in Chapter 3 Section 6 of the *California TEES*, August 2002. Where differences occur, this Specification governs. Ensure that the manufacturer of the unit is listed on the current California Department of Transportation (CALTRANS) Qualified Products List (QPL) for signal monitors as well as the GDOT QPL.

Provide a Signal Monitor that is capable of monitoring sixteen channels consisting of a Green input, a Yellow input, and a Red input for each channel. Ensure that the unit also includes the enhanced monitoring functions described in Subsection 925.2.04.A.15.

b. Monitor Functions

Except for Conflict faults, compute all fault timing for each channel individually.

1) Conflict Monitoring

Ensure that the Signal Monitor is able to detect the presence of conflicting green or yellow signal voltages on the AC field terminals between two or more non-compatible channels. A Conflict fault (CONFLICT) shall be a latching fault.

2) Conflict Recognition Time

Ensure the Signal Monitor shall trigger when voltages on any conflicting channels are present for more than 500 ms. Ensure that the Signal Monitor does not trigger when voltages on any conflicting channels are present for less than 200 ms. Conflicting signals sensed for more than 200 ms and less than 500 ms may or may not trigger the unit.

3) 24VDC Monitoring VDC

Ensure that the Signal Monitor is able to detect that the cabinet +24 Vdc supply has fallen below 18 Vdc. A 24VDC failure (VDC FAIL) shall be a latching fault.

4) 24VDC Recognition Time

Ensure that the Signal Monitor shall trigger when the voltage on the +24V input is below 18 Vdc for more than 500 ms. Ensure that the Signal Monitor does not trigger when the voltage on the +24V input is below 18 Vdc for less than 200 ms. A voltage level of +22 Vdc will be required to prevent the unit from triggering.

5) Controller Watchdog Monitoring

Ensure that the Signal Monitor triggers when the Watchdog input does not toggle within the programmed time period (WDT ERROR). Ensure that the unit remains latched in the fault state until reset by the Reset button, an External Reset input command, or AC Line voltage restoring from an AC Line Brownout event. Ensure that a reset resulting from an AC Line Brownout event does not clear the WDT ERROR LED.

a) Controller Watchdog Latch Option

Ensure a programming option sets the Watchdog monitoring function to a latching mode and that only a reset from the Reset button or External Reset input can clear a Watchdog fault. An AC Line brownout condition will not reset the fault.

b) Controller Watchdog Recognition Time

Ensure a programming option sets the maximum Watchdog recognition time to: 1000 + or - 100 ms; or 1500 + or - 100 ms.

c) Controller Watchdog Enable Switch

Provide an internal switch to disable the Watchdog monitoring function. Mount the switch on the PCB and be clearly label "WD ENABLE - ON...OFF". Ensure that placement of the switch in the OFF position causes monitoring of the Watchdog to be inhibited.

d) WDT ERROR LED Control

Ensure that the WDT ERROR LED illuminates when the unit has been triggered by a Watchdog fault. Ensure that it can only be cleared by a reset command from the front panel Reset switch or External

Reset input. If the Watchdog monitoring function is inhibited due to the Watchdog Enable switch, the WDT ERROR LED shall flash at a 0.5 Hz rate.

6) AC Line Monitoring

a) AC Line Brownout Recognition

Ensure that the Signal Monitor is able to detect that the AC Line has fallen below 98 + or - 2 Vac for greater than 400 + or - 50 ms. This shall force the output Relay to the de-energized "fault" state, enable the Stop-Time output, and cause the AC POWER LED to flash at a 2 Hz rate. Ensure that the unit maintains this state until the AC Line voltage rises above 103 + or - 2 Vac for greater than 400 + or - 50 ms. Provide a jumper option which will change the AC Brownout dropout level to 92 + or - 2 Vac and the restore level to 98 + or - 2 Vac.

b) AC Line Power-up and Brownout Delay Time

When the AC Line is greater than 103 + or - 2 volts after power-up or Brownout restore, ensure that the Signal Monitor holds the Output Relay in the de-energized "fault" state and enable the Stop-Time output, for a period of not less than 6.0 + or - 0.5 seconds and not greater than 10.0 + or - 0.5 seconds. Ensure that this flash interval is terminated after at least 6.0 + or - 0.5 seconds if the Signal Monitor has detected at least five transitions of the Watchdog input. If the Signal Monitor does not detect five transitions of the Watchdog input before 10.0 + or - 0.5 seconds, ensure that the Signal Monitor goes to the fault state. During this interval, ensure that the AC POWER LED flashes at a 4 Hz rate.

7) Red Fail Monitoring

Ensure that the Signal Monitor is able to detect the absence of an active voltage on the green and yellow and red field signal inputs of a channel. Red Fail fault (RED FAIL) shall be a latching fault. Ensure that the Red Fail monitoring function is enabled for all channels except when the Red Enable input is not active, or pin #EE is active, or Special Function #1 input is active, or Special Function #2 input is active.

a) Red Fail Recognition Time

Ensure the Signal Monitor triggers when an active voltage on one of the three inputs of a channel are absent for more than 1500 ms. Ensure that the Signal Monitor does not trigger when an active voltage on one of the three inputs of a channel are absent for less than 1200 ms. Channels without proper voltages sensed for more than 1200 ms and less than 1500 ms may or may not trigger the unit. Provide an option switch (RF 2010) which will change the fault recognition time to between 700 ms and 1000 ms.

b) Red Interface Cable Fault

Ensure a programming option is provided such that operating without the Red Interface cable installed shall cause the Signal Monitor to enter the fault mode causing the Output relay contacts to close and enabling the Stop-Time output to the controller. To indicate this fault mode, ensure that the Red Fail indicator is illuminated with all fault channel indicators Off.

Ensure that any Red Fail preemption control to the monitor uses the Special Function inputs #1 or #2.

8) Dual Indication Monitoring

Ensure that the Signal Monitor is able to detect the presence of active voltage on the green and yellow, green and red, or yellow and red field signal inputs of a channel. GYR Dual Indication fault (DUAL IND) shall be a latching fault. Ensure this function is enabled on a per channel basis using dip switches mounted on the PCB labeled "CH1" through "CH16". Ensure that the GYR Dual Indication monitoring function is enabled for all selected channels except when the Red Enable input is not active or pin #EE is active.

a) GY Dual Indication Monitoring

Ensure that the Signal Monitor is able to detect the presence of active voltage on the green and yellow field signal inputs of a channel. GY Dual Indication fault (DUAL IND) shall be a latching fault. Enable this function with a dip switch on the PCB labeled "GY ENABLE". When the switch is in the ON position, monitor all channels for simultaneous active green and yellow inputs on a channel. When selected by the GY ENABLE switch, ensure that the GY Dual Indication monitoring function is disabled when pin #EE is active.

b) Dual Indication Recognition Time

Ensure that the Signal Monitor triggers when multiple inputs are active on a channel for more than 500 ms. Ensure that the Signal Monitor does not trigger when multiple inputs are active on a channel for less than 250 ms. Channels with multiple voltages active for more than 250 ms and less than 500 ms may or may not trigger the unit.

9) Clearance (Short or Absent Yellow) Monitoring

Ensure that the Signal Monitor is able to detect that a channel has not provided an adequate Yellow Clearance interval during a green to yellow to red sequence. A Sequence failure (SEQUENCE) shall be a latching fault. Ensure that this function is enabled on a per channel basis using dip switches mounted on the PCB labeled "CH1" through "CH16". Ensure that the Sequence monitoring function is enabled for all selected channels except when the Red Enable input is not active or pin #EE is active.

10) Clearance Recognition Time

Ensure that the Yellow Clearance interval is 2.7 seconds

11) Flickering Indication Detection

Ensure that the Signal Monitor provides a method of detecting Conflict, Red Fail, and Dual Indication faults that result from intermittent or flickering field signal inputs that may not meet the duration requirements but continue to flicker for an extended period of time. These flickering indications shall result in a latching fault with an indication illuminated along with the resulting Conflict, Red Fail, or Dual Indication indicator. Provide an option switch to disable this option.

12) Configuration Change Monitoring

- On power-up, reset, and periodically during operation, ensure that the Signal Monitor compares the current configuration settings with the previously stored value and if the settings have changed, the Signal Monitor automatically logs the new setting. Ensure that these settings include the permissive diode matrix, all switches, all jumpers, and the Watchdog Enable switch.
- Provide a programming option such that any change in the configuration parameters will cause the Signal Monitor to enter the fault mode causing the Output relay contacts to close and enabling the Stop-Time output to the controller. To indicate this fault mode ensure that the PCA indicator will flash at a 4 Hz rate. Depressing the Reset button for 5 full seconds is required to clear this fault and log the new configuration parameters.
- If the programming option is not selected, ensure that the unit does not set the fault mode but will still log the configuration change.

13) Program Card Ajar

Ensure that when the Programming Card is removed or not seated properly, the Signal Monitor forces the Output Relay to the de-energized "fault" state, enable the Stop-Time output, and illuminate the PCA LED. A reset command from the front panel Reset switch or External Reset input is required once the Program Card is in place.

14) Exit Flash

When the Signal Monitor exits the flash state (Output relay de-energized) as a result of a Reset command or AC Line brownout restore, ensure that the Stop Time output goes to the inactive state 250 + OR - 50 ms before the Output relay transfers to the energized state. This transition will provide an early indication to the Controller Unit that the cabinet will transfer from flash to signal operation.

c. Display Functions

Ensure that it is possible to view the active channels for each individual color (GYR) during operation and when latched in a fault state. When the Signal Monitor is latched in a fault state ensure that it is also be possible to view the active channels for each individual color and fault status for each channel for the current fault and the two previous faults.

1) Previous Fault GYR Display

- When the Signal Monitor has been triggered by a fault the channel status display will alternate between the channels which were involved in the fault (fault status) for 2 seconds, and the field signals active at the time of the fault for 6 seconds. The channels involved in the fault will flash their respective Green, Yellow, and Red indicators simultaneously at a 4 Hz rate for the 2 second interval.
- The two previous faults may also be displayed individually. This status is not reset by an AC Line power interruption. To enter this display mode remove the Program Card. The sequence is as follows:

Reset	Event	PCA LED	Fault Status LEDs	Channel Status LEDs
---	#1	Single flash	Current Fault Status (newest)	Current Field status
#1	#2	Double flash	Event #2 Fault Status	Event #2 Field status
#2	#3	Triple flash	Event #3 Fault Status (oldest)	Event #3 Field status
(repeats back to top)				

d. Event Logging Functions

Ensure that the Signal Monitor is capable of storing in non-volatile memory a minimum of 100 events. Mark each event with the time and date of the event. These events consist of fault events, AC Line events, reset events, and configuration change events. Provide a graphical means of displaying the signal states of all field inputs for 30 seconds prior to a fault trigger event. Provide the capability to assign a four-digit identification number to the unit shall be provided. Upload the event logs to a PC using the serial port of the Signal Monitor and software provided by the manufacturer.

Ensure each event log report contains the following information:

- Monitor ID#: a four digit (0000-9999) ID number assigned to the monitor.
- Time and Date: time and date of occurrence.
- Event Number: identifies the record number in the log. Event #1 is the most recent event.

1) Monitor Status Report (CS)

Ensure the Current Status report contains the following information:

- Fault Type: the fault type description.
- Field Status: the current GYR field status and field RMS voltages if the monitor is not in the fault state, or the latched field status and field RMS voltages and fault channel status at the time of the fault.
- Cabinet Temperature: the current temperature if the monitor is not in the fault state, or the latched temperature at the time of the fault.
- AC Line Voltage: the current AC Line voltage if the monitor is not in the fault state, or the AC Line voltage at the time of the fault.
- Control Input Status: the current state and RMS voltages of the Red Enable input, EE input, and Special Function #1 and #2 inputs if the monitor is not in the fault state, or the status latched at the time of the fault.

2) Previous Fault Log (PF)

Ensure the Previous Fault log contains the following information:

- Fault Type: the fault type description.
- Field Status: the latched field status with RMS voltages, and fault channel status at the time of the fault.
- Cabinet Temperature: the latched temperature at the time of the fault.
- AC Line Voltage: the AC Line voltage at the time of the fault.
- Control Input Status: the latched state of the Red Enable input, EE input, and Special Function #1 and #2 inputs at the time of the fault.

3) AC Line Event Log (AC)

The AC Line log shall contain the following information:

- Event Type: describes the type of AC Line event that occurred.
  - Power-up—AC on, monitor performed a cold start
  - Interrupt—AC Line < Brownout level
  - Restore—AC restored from brown-out or interruption (AC Off), no cold start
- AC Line Voltage: the AC Line voltage at the time of the event.

4) Monitor Reset Log (MR)

Ensure the Monitor Reset log contains the following information:

The monitor was reset from a fault by the front panel Reset button or External Reset input.

5) Configuration Change Log (CF)

Ensure the Configuration Change log contains the following information:

a) Program Card Matrix: the permissive programming for each channel.

b) Yellow Disable Jumpers: the Yellow Disable programming for each channel.

c) Dual/Sequence Switches: the switch programming for each channel.

d) Option Switches: RF 2010, RP Disable, GY Enable, SF1 Polarity, Sequence Timing, Minimum Flash Enable, Configuration Fault Enable, Red Cable Fault enable, AC Brownout timing.

e) Watchdog Programming: Watchdog Enable, Watchdog Latch, and Watchdog timing.

f) Configuration CRC: A unique CRC value which is based on the configuration of items #a though #e above.

Indicate on the log, which items have been changed since the last log entry.

6) Signal Sequence Log

Provide a log that graphically displays all field signal states for up to 30 seconds prior to the current fault trigger event. Ensure that the resolution of the display is at least 50 milliseconds.

e. Communications Functions

1) Controller Unit Communications

Type A: Ensure that the Signal Monitor is compatible with the protocol of the current GDOT licensed firmware for 2070 controllers and Central System Control. Ensure the 2010 Conflict Monitor supplied is able to communicate via a serial link. to the 2010 Controller and then to a Central System using the current licensed GDOT Central System Software for reporting, configuring and logging.

Type B: Ensure that the Signal Monitor is compatible with the protocol of the current GDOT licensed firmware for 2070 controllers and Central System Control. Ensure the 2010 Conflict Monitor supplied is able to communicate via a RJ-45 connector (Ethernet).

2) Personal Computer Communications

Have the manufacturer provide software to access the Signal Monitor status and event logs described in Subsection 925.2.04.A.14.d. Ensure this software operates with current version of Microsoft Windows.

f. Hardware

1) Red Monitoring

a) Red Field Inputs

Ensure that the Signal Monitor is capable of monitoring sixteen Red field signals. Ensure that a Red input is sensed active when the input voltage exceeds 70 Vrms. Ensure that a Red input is sensed not active when the input voltage is less than 50 Vrms. A Red input may or may not be sensed active when the input voltage is between 50 Vrms and 70 Vrms.

b) Red Enable Input

Ensure that the Red Enable input provides an AC input to the unit which enables Red Monitoring, Dual Indication Monitoring, and Sequence monitoring when the input is sensed active.

Ensure that the Red Enable input is sensed active when the input voltage exceeds 70 Vrms. Ensure that the Red Enable input is sensed not active when the input voltage is less than 50 Vrms. The Red Enable input may or may not be sensed active when the input voltage is between 50 Vrms and 70 Vrms.

c) Special Function Preemption Inputs

Ensure that the Special Function Preemption inputs #1 and #2 provide an AC input to the unit which disables only Red Fail Monitoring (Lack of Output) when either input is sensed active.

Ensure that a Special Function input is sensed active when the input voltage exceeds 70 Vrms. Ensure that a Special Function input is sensed not active when the input voltage is less than 50 Vrms. A Special Function input may or may not be sensed active when the input voltage is between 50 Vrms and 70 Vrms.

Use a PCB mounted switch to provide the option to invert the active status of the Special Function #1 input. When the switch is in the ON position, ensure that the Special Function #1 input is sensed not active when the input voltage exceeds 70 Vrms. Ensure that the Special Function #1 input is sensed active when the input voltage is less than 50 Vrms. The Special Function #1 input may or may not be sensed active when the input voltage is between 50 Vrms and 70 Vrms.

d) Red Interface Connector

This connector provides the required inputs for the unit to monitor the Red field signal outputs. Ensure the connector is a 20 pin connector that mates with the P20 Cable from the output file. Provide a high quality connector that is polarized to insure proper mating with the cable. Ensure Ejector latches are included to facilitate removal and prevent the cable from inadvertently disconnecting. Ensure the unit shall function as a standard 210 Signal Monitor when the cable is disconnected. Use the pin assignments shown in Table 925-1.

Table 925 -1 Red Interface Connector

Pin	Function	Pin	Function
1	Channel 15 Red	11	Channel 9 Red
2	Channel 16 Red	12	Channel 8 Red
3	Channel14 Red	13	Channel 7 Red
4	Chassis Ground*	14	Channel 6 Red
5	Channel 13 Red	15	Channel 5 Red
6	Special Function #2	16	Channel 4 Red
7	Channel 12 Red	17	Channel 3 Red
8	Special Function #1	18	Channel 2 Red
9	Channel 10 Red	19	Channel 1 Red
10	Channel 11 Red	20	Red Enable
*A jumper option shall be provided to allow the connection of Pin #4 to be made with Chassis Ground.			

2) Front Panel

Ensure the front panel is constructed of sheet aluminum with a minimum thickness of 0.090 in. (2.286 mm), and finished with an anodized coating. Ensure the model information shall be permanently displayed on the front surface.

a) Indicators

Ensure that all display indicators are mounted on the front panel of the Signal Monitor and are water clear, T-1 package, Super Bright type LEDs. Ensure that all fault LEDs are red except the AC POWER indicator which is green. Provide a separate Red, Yellow, and Green indicator for each channel. Label the indicators and provide the information as follows:

- AC POWER

  Ensure the AC Power indicator flashes at a rate of 2 Hz when the unit has detected a low voltage condition as described in Subsection 925.2.04.A.15. Ensure the AC POWER indicator flashes at a rate of 4 Hz during the minimum flash interval as described in Subsection 925.2.04.A.15. Ensure that the indicator illuminates when the AC Line voltage level is restored above the brownout level. Ensure the indicator extinguishes when the AC Line voltage is less than 80 Vac.

- VDC FAILED

  Ensure the VDC FAILED indicator illuminates when a 24VDC fault condition is detected. This indicator remains extinguished if the monitor has not been triggered by a 24VDC fault.

- WDT ERROR

  Ensure the WDT ERROR indicator illuminates when a controller Watchdog fault is detected. Ensure the WDT Error indicator flashes ON once every 2 seconds if the WD Enable switch on the monitor is placed in the OFF position to disable Watchdog monitoring, or the AC Line voltage is below the Watchdog disable level.

- CONFLICT

  Ensure that the CONFLICT indicator illuminates when a conflicting signal fault is detected.

- DIAGNOSTIC

  Ensure the DIAGNOSTIC indicator illuminates when one of the following faults is detected: Internal Watchdog fault, Memory Test fault, or Internal power supply fault. This indicator is intended to inform the service technician of a monitor hardware or firmware failure.

- RED FAIL

  Ensure the RED FAIL indicator illuminates when an absence of signal is detected on a channel(s). Ensure the RED FAIL indicator flashes ON once every two seconds if the RED ENABLE input is not active, or a Special Function input is active, or the EE input is active
- DUAL IND.

  Ensure the Dual IND. indicator illuminates when a GY-Dual or GYR-Dual Indication fault is detected on a channel(s).
- CLEARANCE

  Ensure the Sequence indicator illuminates when the minimum Yellow Clearance time has not been met on a channel(s).
- PCA

  Ensure the PCA indicator illuminates if the Program Card is absent or not properly seated.

  If the unit is in the Diagnostic Display mode, ensure the PCA indicator flashes ON (once, twice, or three times) to indicate the fault event number being displayed. See Subsection 925.2.04.A.15.
- RP DETECT

  Ensure the RP DETECT indicator illuminates when the unit has detected a Conflict, Red Fail, or Dual Indication fault as a result of recurring pulse field inputs.
- CHANNEL STATUS

  Ensure that during normal operation the 48 Channel Status indicators display all active signals (Red, Green, and Yellow).

  In the fault mode, ensure that the Channel Status indicators display all signals active at the time of the fault for six seconds and then indicate the channels involved in the fault for 2 seconds.

b) Front Panel Control-Reset Button

- Provide a momentary SPST Control switch labeled RESET on the unit front panel to reset the monitor circuitry to a non-failed state. Position the switch on the front panel such that the switch can be operated while gripping the front panel handle. Ensure that a reset command issued from either the front panel button or External Reset input is a one-time reset input to prevent the unit from constant reset due to a switch failure or constant external input, and causes all LED indicators to illuminate for 300 ms.
- The Reset button also provides control of the Diagnostic Display mode. For a complete description of Diagnostic Display operation, see Subsection 925.2.04.A.15.

c) Serial Communications Connector

Use this connector to provide EIA-232 serial communications. Ensure that it is a high quality 9 pin metal shell D subminiature type with female contacts. Refer to Table 925-2 for Pin assignments.

Table 925-2 Serial Communications Connector

Pin	Function
1	DCD*
2	TX DATA
3	RX DATA
4	DTR (Data Terminal Ready)
5	SIGNAL GROUND
6	DSR
7	DSR*
8	CTS*
9	NC

* Provide Jumper options to allow the connection of Pin #4 to be made with Pin #7, and the connection of Pin #8 to be made with Pin #1.

3) Electronics

a) RMS Voltage Sampling

Use high speed sampling techniques to determine the true RMS value of the AC field inputs. Sample each AC input at least 32 times per cycle. Ensure that the RMS voltage measurement is insensitive to phase, frequency, and waveform distortion.

b) Internal MPU Watchdog

Use a microprocessor for all timing and control functions. Verify continuing operation of the microprocessor by an independent monitor circuit, that forces the Output Relay to the de-energized "fault" state, enable the Stop-Time output, and illuminate the DIAGNOSTIC indicator if a pulse is not received from the microprocessor within 300 ms.

If the microprocessor should resume operation, ensure the Signal Monitor continues to operate. Ensure that this monitoring circuit is also configurable to latch in the fault state. Ensure the unit requires a power-up cycle to reset the circuit once it is triggered.

c) Sockets

In the interest of reliability, ensure that only the PROM memory device for the microprocessor firmware is socket mounted. Ensure that the PROM memory socket is a precision screw machine type socket with a gold contact finish providing a reliable gas tight seal. Low insertion force sockets or sockets with "wiper" type contacts are not acceptable.

d) Internal Power Supply

Use a built-in, high-efficiency switching power supply to generate all required internal voltages. Ensure that all supply voltages regulated. Failure of the internal power supply to provide proper operating voltages shall force the output Relay to the de-energized "fault" state, enable the Stop-Time output, and illuminate the DIAGNOSTIC indicator. Provide a user replaceable slow blow fuse for the AC Line input. Ensure the unit is operational over the AC Line voltage range of 75 Vac to 135 Vac.

e) EIA-232 Interface

Ensure the EIA-232 port interface electronics is electrically isolated from all monitor electronics except chassis ground.

f) Configuration Parameters

Select user-programmed configuration settings using PCB mounted switches or jumpers. Designs requiring a Personal Computer (PC) to program or verify the configuration parameters are not acceptable. Ensure that user-programmed configuration settings that are transferred to memory are stored in a programmable read-only memory (PROM or EEPROM). Designs using a battery to maintain configuration data are not acceptable.

g) Field Terminal Inputs

Ensure that all 120 Vac field terminal inputs provide an input impedance of 150K 50K ohms and be terminated with a discrete resistor having a power dissipation rating of 0.5 Watts or greater and a voltage rating exceeding 350 volts.

h) Component Specifications

Ensure that all electrical components used in the Signal Monitor are rated by the component manufacturer to operate beyond the full unit operating temperature range of –29 ˚F to 165 ˚F(-34 ˚C to +74 ˚C).

i) Printed Circuit Boards

Ensure that all printed circuit boards meet the requirements of the *California Traffic Signal Control Equipment Specifications*, January 1989, plus the following requirements to enhance reliability:

- All plated-through holes and exposed circuit traces are plated with solder.
- Both sides of the printed circuit board are covered with a solder mask material.
- The circuit reference designation for all components and the polarity of all capacitors and diodes are clearly marked adjacent to the component. Ensure that Pin #1 for all integrated circuit packages is designated on both sides of all printed circuit boards.
- All electrical mating surfaces are gold plated.
- All printed circuit board assemblies are coated on both sides with a clear moisture-proof and fungus-proof sealant.
- All components and wire harnesses are mounted to the PCB using plated holes. "Piggy back" connections or jumper wires are not acceptable.

15. Type 2018 Signal Monitors:
    a. Introduction

    This Specification sets forth the minimum requirements for a rack-mountable, eighteen channel, solid-state 2018 Signal Monitor for Traffic Cabinet Assembly. Ensure that as a minimum, the Signal Monitor complies with all applicable Specifications outlined in Chapter 4 of the *California TEES*, January 1989. Where differences occur, this specification governs. Ensure that the manufacturer of the unit is listed on the current GDOT QPL for signal monitors.

    Provide a signal monitor that is capable of monitoring eighteen channels consisting of a Green input, a Yellow input, and a Red input for each channel. Ensure that the unit also includes the enhanced monitoring functions described in 925.2.04.A.15.

    b. Monitor Functions

    1) Conflict Monitoring

    Ensure that the Signal Monitor is able to detect the presence of conflicting green or yellow signal voltages on the AC field terminals between two or more non-compatible channels. A Conflict fault (CONFLICT) shall be a latching fault. Ensure that programming of the permissive matrix is contained in the Datakey.

    2) Conflict Recognition Time

    Ensure the Signal Monitor triggers when voltages on any conflicting channels are present for more than 500 ms. Ensure that the Signal Monitor does not trigger when voltages on any conflicting channels are present for less than 200 ms. Conflicting signals sensed for more than 200 ms and less than 500 ms may or may not trigger the unit.

    3) 24VDC Monitoring

    Ensure that the Signal Monitor is able to detect that the cabinet +24 Vdc supply has fallen below 18 Vdc. A 24VDC failure (VDC FAIL) shall be a latching fault.

    4) 24VDC Recognition Time

    Ensure that the Signal Monitor shall trigger when the voltage on the +24V input is below 18 Vdc for more than 500 ms. Ensure that the Signal Monitor does not trigger when the voltage on the +24V input is below 18 Vdc for less than 200 ms. A voltage level of +22 Vdc will be required to prevent the unit from triggering.

    5) Controller Watchdog Monitoring

    Ensure that the Signal Monitor triggers when the Watchdog input does not toggle within the programmed time period (WDT ERROR). Ensure that the unit remains latched in the fault state until reset by the Reset button, an External Reset input command, or AC Line voltage restoring from an AC Line Brownout event. Ensure that a reset resulting from an AC Line Brownout event does not clear the WDT ERROR LED.

    a) Controller Watchdog Latch Option

    Ensure a Datakey programming option sets the Watchdog monitoring function to a latching mode and that only a reset from the Reset button or External Reset input can clear a Watchdog fault. Ensure that an AC Line brownout condition does not reset the fault.

    b) Controller Watchdog Recognition Time

    Ensure a Datakey programming option sets the maximum Watchdog recognition time to 1000 + or - 100 ms; or 1500 + or - 100 ms.

    c) Controller Watchdog Enable Switch

    Provide an internal switch to disable the Watchdog monitoring function. Mount the switch on the PCB and be clearly label "WD ENABLE - ON...OFF". Ensure that placement of the switch in the OFF position causes monitoring of the Watchdog to be inhibited.

    d) WDT ERROR LED Control

    Ensure that the WDT ERROR LED illuminates when the unit has been triggered by a Watchdog fault. Ensure that it can only be cleared by a reset command from the front panel Reset switch or External Reset input. If the Watchdog monitoring function is inhibited due to the Watchdog Enable switch, the WDT ERROR LED shall flash at a 0.5 Hz rate.

    6) AC Line Monitoring

    a) AC Line Brownout Recognition

Ensure that the Signal Monitor is able to detect that the AC Line has fallen below 98 + or - 2 Vac for greater than 400 + or - 50 ms. This shall force the output Relay to the de-energized "fault" state, enable the Stop-Time output, and cause the AC POWER LED to flash at a 2 Hz rate. Ensure that the unit maintains this state until the AC Line voltage rises above 103 + or - 2 Vac for greater than 400 + or - 50 ms. Provide a jumper option which will change the AC Brownout dropout level to 92 + or - 2 Vac and the restore level to 98 + or - 2 Vac.

b) AC Line Power-up and Brownout Delay Time

When the AC Line is greater than 103 + or - 2 volts after power-up or Brownout restore, ensure that the Signal Monitor holds the Output Relay in the de-energized "fault" state and enable the Stop-Time output, for a period of not less than 6.0 + or - 0.5 seconds and not greater than 10.0 + or - 0.5 seconds. Ensure that this flash interval is terminated after at least 6.0 + or - 0.5 seconds if the Signal Monitor has detected at least five transitions of the Watchdog input. If the Signal Monitor does not detect five transitions of the Watchdog input before 10.0 + or - 0.5 seconds, ensure that the Signal Monitor goes to the fault state. During this interval, ensure that the AC POWER LED flashes at a 4 Hz rate.

Ensure that the Datakey Minimum Flash Time parameter has a range of zero and from six to sixteen seconds.

7) Red Fail Monitoring

Ensure that the Signal Monitor is able to detect the absence of an active voltage on the green and yellow and red field signal inputs of a channel. Red Fail fault (RED FAIL) shall be a latching fault. Ensure that the Red Fail monitoring function is enabled in the Datakey on a per channel basis except when the Red Enable input is not active, or pin #EE is active, or Special Function #1 input is active, or Special Function #2 input is active.

a) Red Fail Recognition Time

Ensure the Signal Monitor triggers when an active voltage on one of the three inputs of a channel are absent for more than 1500 ms. Ensure that the Signal Monitor does not trigger when an active voltage on one of the three inputs of a channel are absent for less than 1200 ms. Channels without proper voltages sensed for more than 1200 ms and less than 1500 ms may or may not trigger the unit. Ensure that a Datakey Red Fail Timing option is provided which will change the fault recognition time between 700ms and 1000 ms.

b) Red Interface Cable Fault

Ensure a Datakey programming option is provided such that operating without the Red Interface cable installed shall cause the Signal Monitor to enter the fault mode causing the Output relay contacts to close and enabling the Stop-Time output to the controller. To indicate this fault mode, ensure that the Red Fail indicator is illuminated with all fault channel indicators Off.

Ensure that any Red Fail preemption control to the monitor uses the Special Function inputs #1 or #2.

8) Dual Indication Monitoring

Ensure that the Signal Monitor is able to detect the presence of active voltage on the green and yellow, green and red, or yellow and red field signal inputs of a channel. GYR Dual Indication fault (DUAL IND) shall be a latching fault. Ensure this function is enabled in the Datakey on a per channel basis for Green and Yellow combinations, Green and Red combinations, and Yellow and Red combinations. Ensure that the GYR Dual Indication monitoring function is enabled for all selected channels except when the Red Enable input is not active or pin #EE is active.

a) GY Dual Indication Monitoring

Ensure that the Signal Monitor is able to detect the presence of active voltage on the green and yellow field signal inputs of a channel. GY Dual Indication fault (DUAL IND) shall be a latching fault. Enable this function with a dip switch on the PCB labeled "GY ENABLE". When the switch is in the ON position, monitor all channels for simultaneous active green and yellow inputs on a channel. When selected by the GY ENABLE switch, ensure that the GY Dual Indication monitoring function is disabled when pin #EE is active.

b) Dual Indication Recognition Time

Ensure that the Signal Monitor triggers when multiple inputs are active on a channel for more than 500 ms. Ensure that the Signal Monitor does not trigger when multiple inputs are active on a channel for less than 250 ms. Channels with multiple voltages active for more than 250 ms and less than 500 ms may or may not trigger the unit.

9) Clearance (Short or Absent Yellow) Monitoring

Ensure that the Signal Monitor is able to detect that a channel has not provided an adequate Yellow Clearance interval during a green to yellow to red sequence. A Sequence failure (SEQUENCE) shall be a latching fault. Ensure that this function is enabled in the Datakey on a per channel basis. Ensure that the Sequence monitoring function is enabled for all selected channels except when the Red Enable input is not active or pin #EE is active.

10) Clearance Recognition Time

Ensure that the Yellow Clearance interval is 2.7 seconds

11) Flickering Indication Detection

Ensure that the Signal Monitor provides a method of detecting Conflict, Red Fail, and Dual Indication faults that result from intermittent or flickering field signal inputs that may not meet the duration requirements but continue to flicker for an extended period of time. These flickering indications shall result in a latching fault with an indication illuminated along with the resulting Conflict, Red Fail, or Dual Indication indicator. Insure a programming option is provided in the Datakey to disable the RP Detect function.

12) Configuration Change Monitoring

On power-up, reset, and periodically during operation, ensure that the Signal Monitor compares the current configuration settings with the previously stored value and if the settings have changed, the Signal Monitor automatically logs the new setting. Ensure that these settings include the permissive diode matrix, all switches, all jumpers, and the Watchdog Enable switch.

Provide a programming option such that any change in the configuration parameters will cause the Signal Monitor to enter the fault mode causing the Output relay contacts to close and enabling the Stop-Time output to the controller. To indicate this fault mode ensure that the PCA indicator will flash at a 4 Hz rate. Depressing the Reset button for 5 full seconds is required to clear this fault and log the new configuration parameters.

If the programming option is not selected, ensure that the unit does not set the fault mode but will still log the configuration change.

13) Program Card Ajar

Ensure that when the Programming Card is removed or not seated properly, the Signal Monitor forces the Output Relay to the de-energized "fault" state, enable the Stop-Time output, and illuminate the PCA LED. A reset command from the front panel Reset switch or External Reset input is required once the Program Card is in place.

14) Datakey Error

Ensure that when the Datakey is removed or when a nonvalid Datakey is inserted, the Signal Monitor forces the Output Relay to the de-energized fault state, enables the Stop-Time output, and illuminates the KEY indicator. Ensure that a reset command from the front panel Reset switch or External Reset input is required once a valid Datakey is in place. Ensure that failure to read the Datakey correctly results in a Datakey Error illuminating the KEY indicator.

15) Exit Flash

When the Signal Monitor exits the flash state (Output relay de-energized) as a result of a Reset command or AC Line brownout restore, ensure that the Stop Time output goes to the inactive state 250 + OR - 50 ms before the Output relay transfers to the energized state. This transition will provide an early indication to the Controller Unit that the cabinet will transfer from flash to signal operation.

c. Display Functions

1) Ensure that it is possible to view the active channels for each individual color (GYR) during operation and when latched in a fault state. When the Signal Monitor is latched in a fault state ensure that it is also be possible to view the active channels for each individual color and fault status for each channel for the current fault and the two previous faults.

2) Previous Fault GYR Display

When the Signal Monitor has been triggered by a fault, the channel status display will alternate between the channels which were involved in the fault (fault status) for 2 seconds, and the field signals active at the time of the fault for 6 seconds. The channels involved in the fault will flash their respective Green, Yellow, and Red indicators simultaneously at a 4 Hz rate for the 2 second interval.

The two previous faults may also be displayed individually. This status is not reset by an AC Line power interruption. To enter this display mode remove the Datakey. The sequence is as follows:

Reset	Event	PCA LED	Fault Status LEDs	Channel Status LEDs
---	#1	Single flash	Current Fault Status (newest)	Current Field status
#1	#2	Double flash	Event #2 Fault Status	Event #2 Field status
#2	#3	Triple flash	Event #3 Fault Status (oldest)	Event #3 Field status
(repeats back to top)				

To exit this display mode, replace the Datakey.

d. Event Logging Functions

Ensure that the Signal Monitor is capable of storing in non-volatile memory a minimum of 100 events. Mark each event with the time and date of the event. These events consist of fault events, AC Line events, reset events, and configuration change events. Provide a graphical means of displaying the signal states of all field inputs for 30 seconds prior to a fault trigger event. Provide the capability to assign an eight-digit identification number to the unit shall be provided. Upload the event logs to a PC using the serial port of the Signal Monitor and software provided by the manufacturer.

Ensure each event log report contains the following information:

- Monitor ID#: an eight digit (0-99999999) ID number assigned to the monitor.
- Time and Date: time and date of occurrence.
- Event Number: identifies the record number in the log. Event #1 is the most recent event.

1) Monitor Status Report (CS)

Ensure the Current Status report contains the following information:

- Fault Type: the fault type description.
- Field Status: the current GYR field status and field RMS voltages if the monitor is not in the fault state, or the latched field status and field RMS voltages and fault channel status at the time of the fault.
- Cabinet Temperature: the current temperature if the monitor is not in the fault state, or the latched temperature at the time of the fault.
- AC Line Voltage: the current AC Line voltage if the monitor is not in the fault state, or the AC Line voltage at the time of the fault.
- Control Input Status: the current state and RMS voltages of the Red Enable input, EE input, and Special Function #1 and #2 inputs if the monitor is not in the fault state, or the status latched at the time of the fault.

2) Previous Fault Log (PF)

Ensure the Previous Fault log contains the following information:

- Fault Type: the fault type description.
- Field Status: the latched field status with RMS voltages, and fault channel status at the time of the fault.
- Cabinet Temperature: the latched temperature at the time of the fault.
- AC Line Voltage: the AC Line voltage at the time of the fault.
- Control Input Status: the latched state of the Red Enable input, EE input, and Special Function #1 and #2 inputs at the time of the fault.

3) AC Line Event Log (AC)

The AC Line log shall contain the following information:

- Event Type: describes the type of AC Line event that occurred.
  - Power-up—AC on, monitor performed a cold start
  - Interrupt—AC Line < Brownout level
  - Restore—AC restored from brown-out or interruption (AC Off), no cold start
- AC Line Voltage: the AC Line voltage at the time of the event.

4) Monitor Reset Log (MR)

Ensure the Monitor Reset log contains the following information:

a) Event Type: The monitor was reset from a fault by the front panel Reset button or External Reset input.

b) Time and Date: the time and date of the event.

5) Configuration Change Log (CF)

Ensure the Configuration Change log contains the following information:

a) Datakey Contents and any additional programming parameters resulting from hardware configuration settings.

b) The log shall indicate which items have been changed since the last log entry.

c) Time and Date: the time and date of the event.

6) Signal Sequence Log

Provide a log that graphically displays all field signal states for up to 30 seconds prior to the current fault trigger event. Ensure that the resolution of the display is at least 50 milliseconds.

e. Communications Functions

1) Controller Unit Communications

Type A: Ensure that the Signal Monitor is compatible with the protocol of the current GDOT licensed firmware for 2070 controllers and Central System Control. Ensure the 2018 Conflict Monitor supplied is able to communicate via a serial link to the 2010 Controller and then to a Central System using the current licensed GDOT Central System Software for reporting, configuring and logging.

Type B: Ensure that the Signal Monitor is compatible with the protocol of the current GDOT licensed firmware for 2070 controllers and Central System Control. Ensure the 2018 Conflict Monitor supplied is able to communicate via a RJ-45 connector (Ethernet).

2) Personal Computer Communications

Have the manufacturer provide software to access the Signal Monitor status and event logs described in Subsection 925.2.04.A.14.d. Ensure this software operates with current version of Microsoft Windows or Windows XP™

f. Hardware

1) Monitor Configuration Programming

Ensure a monitor parameter programming is provided in a removeable and interchangeable Datakey nonvolatile memory device mounted on the front panel.

a) Monitor Unit Serial Memory Key

Ensure that the monitor has a Datakey™ model KC4210 Keycepticle™ socket or equal mounted on the front panel containing a Datakey™ model LCK4000-RED serial memory key or equal. Ensure that the serial memory key is rated for –40 to +80 °C operation. (Note: Datakey™ and Keycepticle™ are registered trademarks of Datakey Electronics, Inc.)

b) Monitor Unit Serial Memory Key Interface

Ensure that the Signal Monitor does not provide the capability to program the serial memory key. It shall be used only as a read only device. Ensure that the 16 bit Frame Check Sequence (FCS) procedure defined in clause 4.6.2 of ISO/IEC 3309 is used to verify the integrity of the read data. Ensure that failure to read the serial memory key correctly results in a latched Diagnostic fault. Ensure that interface circuitry to the Datakey utilizes the LOFO switch on the serial memory key socket to ensure the device is removed and inserted with no power applied to the interface pins (i.e. dead socket).

c) Datakey Programming Tool

Ensure the programming tool provides all the electronics necessary to read data from and write data to the Datakey device. Ensure the programmer is configured to Read and Write to the Datakey model LCK4000 which provides 512 bytes of storage. Ensure power for the programming tool is obtained from the personal computer communications port so that no external power supply source is required.

d) Datakey Programming Software

Ensure that the manufacturer provides software to operate the Datakey Programming Tool. Ensure that the Datakey programming parameters are stored in a Windows file format according to currently used Signal Monitor identification number and name.

e) Parameter Forms

Ensure that a parameter form is provided for each programmable Signal Monitor function. Ensure that Signal Monitor configuration data is entered on a parameter form and then saved to the main data buffer image. When all parameter forms are completed ensure that a Write function transfers the

contents of the data buffer to the nonvolatile memory of the Datakey device. Ensure that reading the contents of a Datakey device sets the parameters of each form for review or modification.

f) Datakey Parameter Verify

Ensure that a Datakey Parameter Verify function is provided that compares the contents of a Datakey device with parameters in the data buffer. The data buffer parameters may be set by changing parameters on the forms, reading the contents of a Datakey device, or loading a set of parameters from a file.

g) Initial Parameter Setup Wizard

Ensure that an Initial Parameter Setup wizard is provided that defines and sets a basic set of parameters for a new Datakey setup. Ensure that the wizard asks a series of questions describing basic intersection setup and develop a template for the following set of parameters:

1. Red Fail Monitoring
2. Dual Indication Monitoring
3. Clearance Monitoring
4. Yellow Disable

h) Parameter Check Wizard

Ensure that a Parameter Check wizard is provided that will apply a set of basic configuration rules to the data buffer and provide a warning that configuration conflicts or inconsistencies may exist.

i) Parameter Reports

Ensure that the contents of the data buffer are displayed in a hex format for numerical analysis. A text report shall also be printed that specifies all parameter settings.

2) Red Monitoring

a) Red Field Inputs

Ensure that the Signal Monitor is capable of monitoring sixteen Red field signals. Ensure that a Red input is sensed active when the input voltage exceeds 70 Vrms. Ensure that a Red input is sensed not active when the input voltage is less than 50 Vrms. A Red input may or may not be sensed active when the input voltage is between 50 Vrms and 70 Vrms.

b) Red Enable Input

Ensure that the Red Enable input provides an AC input to the unit which enables Red Monitoring, Dual Indication Monitoring, and Sequence monitoring when the input is sensed active.

Ensure that the Red Enable input is sensed active when the input voltage exceeds 70 Vrms. Ensure that the Red Enable input is sensed not active when the input voltage is less than 50 Vrms. The Red Enable input may or may not be sensed active when the input voltage is between 50 Vrms and 70 Vrms.

c) Special Function Preemption Inputs

Ensure that the Special Function Preemption inputs #1 and #2 provide an AC input to the unit which disables only Red Fail Monitoring (Lack of Output) when either input is sensed active.

Ensure that a Special Function input is sensed active when the input voltage exceeds 70 Vrms. Ensure that a Special Function input is sensed not active when the input voltage is less than 50 Vrms. A Special Function input may or may not be sensed active when the input voltage is between 50 Vrms and 70 Vrms.

Ensure that a programming option is provided in the Datakey to invert the active status of the Special function #1 input. When the the option is enabled, ensure that the Special Function #1 input is sensed not active when the input voltage exceeds 70 Vrms. Ensure that the Special Function #1 input is sensed active when the input voltage is less than 50 Vrms. The Special Function #1 input may or may not be sensed active when the input voltage is between 50 Vrms and 70 Vrms.

d) Red Interface Connector

This connector provides the required inputs for the unit to monitor the Red field signal outputs. Ensure the connector is a 20 pin connector that mates with the P20 Cable from the output file. Provide a high quality connector that is polarized to insure proper mating with the cable. Ensure Ejector latches are included to facilitate removal and prevent the cable from inadvertently disconnecting. Ensure the unit shall function as a standard 210 Signal Monitor when the cable is disconnected. Use the pin assignments shown in Table 925-1.

Table 925 -1 Red Interface Connector			
Pin	**Function**	**Pin**	**Function**
1	Channel 15 Red	11	Channel 9 Red
2	Channel 16 Red	12	Channel 8 Red
3	Channel14 Red	13	Channel 7 Red
4	Chassis Ground*	14	Channel 6 Red
5	Channel 13 Red	15	Channel 5 Red
6	Special Function #2	16	Channel 4 Red
7	Channel 12 Red	17	Channel 3 Red
8	Special Function #1	18	Channel 2 Red
9	Channel 10 Red	19	Channel 1 Red
10	Channel 11 Red	20	Red Enable
*A jumper option shall be provided to allow the connection of Pin #4 to be made with Chassis Ground.			

3) Front Panel

Ensure the front panel is constructed of sheet aluminum with a minimum thickness of 0.090 in. (2.286 mm), and finished with an anodized coating. Ensure the model information shall be permanently displayed on the front surface.

a) Indicators

Ensure that all display indicators are mounted on the front panel of the Signal Monitor and are water clear, T-1 package, Super Bright type LEDs. Ensure that all fault LEDs are red except the AC POWER indicator which is green. Provide a separate Red, Yellow, and Green indicator for each channel. Label the indicators and provide the information as follows:

- AC POWER

  Ensure the AC Power indicator flashes at a rate of 2 Hz when the unit has detected a low voltage condition as described in Subsection 925.2.04.A.15. Ensure the AC POWER indicator flashes at a rate of 4 Hz during the minimum flash interval as described in Subsection 925.2.04.A.15. Ensure that the indicator illuminates when the AC Line voltage level is restored above the brownout level. Ensure the indicator extinguishes when the AC Line voltage is less than 80 Vac.

- VDC FAILED

  Ensure the VDC FAILED indicator illuminates when a 24VDC fault condition is detected. This indicator remains extinguished if the monitor has not been triggered by a 24VDC fault.

- WDT ERROR

  Ensure the WDT ERROR indicator illuminates when a controller Watchdog fault is detected. Ensure the WDT Error indicator flashes ON once every 2 seconds if the WD Enable switch on the monitor is placed in the OFF position to disable Watchdog monitoring, or the AC Line voltage is below the Watchdog disable level.

- CONFLICT

  Ensure that the CONFLICT indicator illuminates when a conflicting signal fault is detected.

- DIAGNOSTIC

  Ensure the DIAGNOSTIC indicator illuminates when one of the following faults is detected: Internal Watchdog fault, Memory Test fault, or Internal power supply fault. This indicator is intended to inform the service technician of a monitor hardware or firmware failure.

- RED FAIL

  Ensure the RED FAIL indicator illuminates when an absence of signal is detected on a channel(s). Ensure the RED FAIL indicator flashes ON once every two seconds if the RED ENABLE input is not active, or a Special Function input is active, or the EE input is active

- DUAL IND.

  Ensure the Dual IND. indicator illuminates when a GY-Dual or GYR-Dual Indication fault is detected on a channel(s).

- SEQUENCE

  Ensure the Sequence indicator illuminates when the minimum Yellow Clearance time has not been met on a channel(s).

- PCA

  Ensure the PCA indicator illuminates if the Program Card is absent or not properly seated.

  If the unit is in the Diagnostic Display mode, ensure the PCA indicator flashes ON (once, twice, or three times) to indicate the fault event number being displayed. See Subsection 925.2.04.A.15.

- RP DETECT

  Ensure the RP DETECT indicator illuminates when the unit has detected a Conflict, Red Fail, or Dual Indication fault as a result of recurring pulse field inputs.

- CHANNEL STATUS

  Ensure that during normal operation the 48 Channel Status indicators display all active signals (Red, Green, and Yellow).

  In the fault mode, ensure that the Channel Status indicators display all signals active at the time of the fault for six seconds and then indicate the channels involved in the fault for 2 seconds.

b) Front Panel Control-Reset Button

- Provide a momentary SPST Control switch labeled RESET on the unit front panel to reset the monitor circuitry to a non-failed state. Position the switch on the front panel such that the switch can be operated while gripping the front panel handle. Ensure that a reset command issued from either the front panel button or External Reset input is a one-time reset input to prevent the unit from constant reset due to a switch failure or constant external input, and causes all LED indicators to illuminate for 300 ms.
- The Reset button also provides control of the Diagnostic Display mode. For a complete description of Diagnostic Display operation, see Subsection 925.2.04.A.15.

c) Serial Communications Connector

Use this connector to provide EIA-232 serial communications. Ensure that it is a high quality 9 pin metal shell D subminiature type with female contacts. Refer to Table 925-2 for Pin assignments.

Table 925-2 Serial Communications Connector

Pin	Function
1	DCD*
2	TX DATA
3	RX DATA
4	DTR (Data Terminal Ready)
5	SIGNAL GROUND
6	DSR
7	DSR*
8	CTS*
9	NC

* Provide Jumper options to allow the connection of Pin #4 to be made with Pin #7, and the connection of Pin #8 to be made with Pin #1.

4) Electronics

a) RMS Voltage Sampling

Use high speed sampling techniques to determine the true RMS value of the AC field inputs. Sample each AC input at least 32 times per cycle. Ensure that the RMS voltage measurement is insensitive to phase, frequency, and waveform distortion.

b) Internal MPU Watchdog

Use a microprocessor for all timing and control functions. Verify continuing operation of the microprocessor by an independent monitor circuit, that forces the Output Relay to the de-energized "fault" state, enable the Stop-Time output, and illuminate the DIAGNOSTIC indicator if a pulse is not received from the microprocessor within 300 ms.

If the microprocessor should resume operation, ensure the Signal Monitor continues to operate. Ensure that this monitoring circuit is also configurable to latch in the fault state. Ensure the unit requires a power-up cycle to reset the circuit once it is triggered.

c) Sockets

In the interest of reliability, ensure that only the PROM memory device for the microprocessor firmware is socket mounted. Ensure that the PROM memory socket is a precision screw machine type socket with a gold contact finish providing a reliable gas tight seal. Low insertion force sockets or sockets with "wiper" type contacts are not acceptable.

d) Internal Power Supply

Use a built-in, high-efficiency switching power supply to generate all required internal voltages. Ensure that all supply voltages regulated. Failure of the internal power supply to provide proper operating voltages shall force the output Relay to the de-energized "fault" state, enable the Stop-Time output, and illuminate the DIAGNOSTIC indicator. Provide a user replaceable slow blow fuse for the AC Line input. Ensure the unit is operational over the AC Line voltage range of 75 Vac to 135 Vac.

e) Output Relay

Ensure the Signal Monitor Output Relay provides both normally open and normally closed contacts. Ensure a programming option is provided to select the polarity of the EE input to accommodate the flash drive voltage state drive on pin EE.

f) EIA-232 Interface

Ensure the EIA-232 port interface electronics is electrically isolated from all monitor electronics except chassis ground.

g) Configuration Parameters

Select user-programmed configuration settings using PCB mounted switches or jumpers. Designs requiring a Personal Computer (PC) to program or verify the configuration parameters are not acceptable. Ensure that user-programmed configuration settings that are transferred to memory are stored in a programmable read-only memory (PROM or EEPROM). Designs using a battery to maintain configuration data are not acceptable.

h) Field Terminal Inputs

Ensure that all 120 Vac field terminal inputs provide an input impedance of 150K 50K ohms and be terminated with a discrete resistor having a power dissipation rating of 0.5 Watts or greater and a voltage rating exceeding 350 volts.

i) Component Specifications

Ensure that all electrical components used in the Signal Monitor are rated by the component manufacturer to operate beyond the full unit operating temperature range of –29 ˚F to 165 ˚F(-34 ˚C to +74 ˚C).

j) Printed Circuit Boards

Ensure that all printed circuit boards meet the requirements of the *California Traffic Signal Control Equipment Specifications*, January 1989, plus the following requirements to enhance reliability:

- All plated-through holes and exposed circuit traces are plated with solder.
- Both sides of the printed circuit board are covered with a solder mask material.
- The circuit reference designation for all components and the polarity of all capacitors and diodes are clearly marked adjacent to the component. Ensure that Pin #1 for all integrated circuit packages is designated on both sides of all printed circuit boards.
- All electrical mating surfaces are gold plated.
- All printed circuit board assemblies are coated on both sides with a clear moisture-proof and fungus-proof sealant.
- All components and wire harnesses are mounted to the PCB using plated holes. "Piggy back" connections or jumper wires are not acceptable.

16. Model 208 Monitor Unit

Provide Model 208 Monitor Unit in accordance with CALTRANS TEES and the following. Provide monitor that is on the CALTRANS QPL and provides the pin assignment as shown in Table 925-3.

The Model 208 Monitor Unit shall reliably sense and cause a relay output contact (FAILED STATE) when monitoring the following:

- A Watchdog Timer (WDT) Timeout Condition
- Cabinet +24 VDC Power Supply below specified threshold

a. WDT Circuitry shall be provided to monitor a controller unit output line state routed to the monitor unit at its assigned pin. The WDT Circuitry shall sense any line state change and the time between the last change. No state change for 1.5 ± 0.1 seconds shall cause a FAILED state. The timer shall reset at each state change in a NON FAILED state.

1) Only the Unit Reset or a WDT inactive due to the voltage sense shall reset the WDT from a FAILED state.
2) A FAILED state caused by the WDT shall illuminate a front panel indicator light label "WDT ERROR". The indicator shall remain ON until Unit Reset Issuance.
3) The WDT Circuitry shall sense the incoming VAC Line and when the voltage falls below 98 ± 2VAC for 50 ± 17 ms shall inhibit the WDT Function. When the WDT Circuitry sensed the incoming VAC Line rise above 103 ± 2VAC for 50 ± 2ms the WDT shall become active. A hysteresis between the Voltage Inhibit and the Voltage Active Setting shall be a minimum of 3 Volts.

b. Power Supply Monitor Requirements

1) The monitor unit shall sense the Cabinet +24 VDC Power Supply Output Voltage.
2) Voltages sensed at +18 VDC or below for a duration of 500 ms or longer shall cause a FAILDED state.
3) Voltages sensed at+22 VDC or above shall NOT cause a FAILED state.
4) Voltages sensed below +22 VDC for a duration of 200 ms or less shall NOT cause a FAILED state.
5) All timing and voltages conditions other than those specified above may or may not cause a FAILED state.
6) A FAILED state caused by sensing the power supply shall illuminate a front panel indicator light labeled "VDC FAILED". The indicator shall remain ON until Unit Reset.
7) Only Unit Reset shall reset the power supply sense circuitry from a FAILED state.

c. FAILED State Output Circuits

1) An electro-mechanical relay shall be provided to switch an output circuit during a FAILED state. The relay coil shall be energized in a NON FAILED State.
2) The relay contacts shall be rated for a minimum of 3 amperes at 120 VAC and 100,000 operations. Contact opening /closing time shall be 30 ms or less.

d. Monitor Unit Reset

1) A momentary SPST CONTROL switch labeled "RESET" shall be provided on the unit front panel to reset the monitor unit circuitry to a NON FAILED state. The switch shall be so positioned on the front panel that the switch can be operated while gripping the front panel handle.
2) The unit shall be provided with provision to drive an external NE2H light through a 56K Ohm, ½ Watt Series resistor (resident on unit)
3) The PDA Type 3 WDT Reset Input shall not be sensed by the unit
4) The output relay CONTACT FOR FAILED STATE shall be OPEN.

Table 925-3 Pin Assignments For Model 208 Monitor Unit	
PIN	**FUNCTION**
1/44	DC Ground
2/43	WDT Ext. Reset
5/40	WDT IN
10/35	+24 VDC
15/30	AC-
17/28	Normally Open, Circ. #2
19/26	AC+
20/25	Normally Closed, Circ. #1
21/24	Circ. Common #1 & #2
22/23	WDT Lamp (External)
NOTE: Card connector keyed between pins 2 & 3, and pins 11 & 12.	

17. Model 242 DC Isolator

    Provide Model 242 DC Isolators that are in accordance with the latest version of CALTRANS Specifications as referenced earlier in this section. Provide isolators that:

    - Allow the 242 isolator input signal polarity to easily be inverted without the use of tools. Acceptable methods are removable jumpers or dip switches. Unacceptable methods are soldering or desoldering a diode or resistor.
    - Output is OFF for input voltages greater than 12 volts;
    - Output is ON for voltages of less than 8 volts that have a duration of at least 5 to 25 ms (optional 2-7 ms);
    - Minimum output pulse width is 100 ms with a valid input (can be disabled);
    - Output is optically isolated open collector NPN transistor;
    - Capable of sinking 50 ma when on;
    - Can register a new input within 25 ms of the old signal going away; and
    - Output clamped on power up and down
    - Compatible with 2070 controllers and latest version of CALTRANS TEES including errata

18. Model 200 Switchpack

    Provide Model 200 Switchpacks that are in accordance with the latest version of CALTRANS Specifications as referenced earlier in this section.

19. Model 204 Flasher Unit

    Provide Model 204 Flasher Units that are in accordance with the latest version of CALTRANS Specifications as referenced earlier in this section.

20. Flash Transfer Relay

    Provide Flash Transfer Relays that are in accordance with the latest version of CALTRANS Specifications as referenced earlier in this section.

21. Cabinet Model 332

    Ensure surge protection conforms to Table 925-5 Required Surge Arrestors for Model 332 Cabinet.

    Supply Model 332 (lower input panel) cabinets, with housing Type 1B, and all components as described in these Specifications.

    Supply cabinets having two input files which conform to the CALTRANS Specifications and configured to accept two 2070 controllers in the top portion of the cabinet. Ensure the cabinet has two shelves provided for controller(s).

    A manual jack shall be installed inside the cabinet. The jack shall intermate with a three circuit 1/4 inch (6.35 mm) diameter phone plug. The tip and ring (middle) circuits of the jack shall-be connected to the logic ground and the

interval advance inputs of controller unit. When the manual hand cord is plugged into the jack and the pushbutton is pressed, logic ground shall be connected to the interval advance input of the controller unit.

A Manual ON- OFF Switch shall be provided on the police panel which grounds the Manual Control Enable (C1 Pin 53) input to the controller whenever the switch is in the ON position and advance input (C1 Pin 80).

A manual pushbutton with cord shall be provided. The cord shall have a minimum length of 6 feet (1.8 m). It shall have a 1/4 inch (6.35 mm) diameter, three circuit plug connected to one end and a manual pushbutton enclosed in a hand held enclosure at the other end. A complete cycle (push-release) of the manual pushbutton shall terminate the controller unit interval which is active except the vehicular yellow and all red clearance intervals. Cycling the push-button during the vehicular yellow or all red clearance intervals shall not terminate the timing of those intervals.

Ensure that the cabinet is configured with an Auxiliary Output File. Additionally, the field wiring terminals may be mounted on the rear of the input file.

22. Cabinet Model 336S (Base Mount)

    This unit meets the CALTRANS Specification with the addition of approximately 6 additional inches (150 mm) of cabinet height exclusive of the "M" base adapter. Configure the internal component layout so that the additional space is available in the bottom area of the cabinet cage. Ensure that the field wiring input panels and surge protection conform to Table 925-6 Model 336S Default Input File Assignment Detail and Table 925-7Required Surge Arrestors for Model 336S Cabinet.

    Ensure that the C1 connector harness is provided with pins for all 104 inputs and outputs from the controller.

    A manual jack shall be installed on the police panel. The jack shall intermate with a three circuit 1/4 inch (6.35 mm) diameter phone plug. The tip and ring (middle) circuits of the jack shall-be connected to the logic ground and the interval advance inputs of controller unit. When the manual hand cord is plugged into the jack and the pushbutton is pressed, logic ground shall be connected to the interval advance input of the controller unit.

    A Manual ON- Off Switch shall be provided on the police panel which grounds the Manual Control Enable (C1 Pin 53) input to the controller whenever the switch is in the ONposition

    A manual pushbutton with cord shall be provided. The cord shall have a minimum length of 3 feet (0.9 m). It shall have a 1/4 inch (6.35 mm) diameter, three circuit plug connected to one end and a manual pushbutton enclosed in a hand held enclosure at the other end. A complete cycle (push-release) of the manual pushbutton shall terminate the controller unit interval which is active except the vehicular yellow and all red clearance intervals. Cycling the push-button during the vehicular yellow or all red clearance intervals shall not terminate the timing of those intervals.

23. Cabinet Model 336S (Pole Mount)

    Ensure that this unit meets the requirements of Subsection 925.2.04.A.22 above, except that the cabinet is configured for pole mounting as specified in the General Requirements for Type 170 Cabinet Assemblies.

24. Cabinet Model 336S (Base Mount with Auxiliary Output File)

    Ensure that this unit meets the requirements of Subsection 925.2.04.A.22 above, except that the cabinet is configured with an Auxiliary Output File. Additionally, the field wiring terminals may be mounted on the rear of the input file.

25. Cabinet Model 337

    The Model 337 cabinet is a compact cabinet with an output capacity of four vehicle phases plus two pedestrian phases; the dimensions not to exceed 17 inches (425 mm) deep x 20 inches (500 mm) wide x 35 inches (875 mm) high and its shipping weight not to exceed 175 pounds (80 kg).

    Supply the cabinet assembly with capacity for 11, two-channel slots in the input file.

    Ensure that the pin assignments of the C1 connector are compatible with the 2070 controller as applicable according to the required number of input/outputs.

    Ensure that the 337 cabinet uses standard Type 170 input and output file units.

    Equip the cabinet with a C2 connector harness with field terminals protected with surge protectors for communication inputs as specified under communications inputs.

    Ensure that the cabinet has two full-size doors to allow complete access from the front or back of the cabinet. Design the rack assembly to mount in CALTRANS standard rails to allow for a Model 204 flasher.

    Provide a receptacle to accept the plug in power distribution assembly card guides and edge connectors for the input file card guides to support the conflict monitor, and load switches and flash transfer relays.

    Due to the compact design of this cabinet assembly, the Department of Transportation may accept a non-standard type of power distribution assembly (PDA).

26. Cabinet Model 334 with Auxiliary Output File for Ramp Metering Operations

The Controller Cabinet shall comply with the CALTRANS Traffic Signal Equipment Specifications (1989), Model 334 Cabinet Specifications (Chapter 6). **DO NOT** use the February 1993 Amendments for Specifications for the Model 334C Cabinet. Do use the Specification Clarifications dated December 20, 1993.

Provide Cabinet configured as shown in Figure 925-1.

Provide Detector Test Switch Panel. Before providing cabinet submit Detector Switch Test panel design and mounting location for approval. Panel shall include one switch for each of the 13 detector inputs.

a. The Detector Test Switch Panel shall be mounted in the cabinet on the rails. The panel shall be fabricated from brushed aluminum.

b. Each switch will be labelled as to function. The label shall be silkcreened on the test panel and be at least ¼ inch in height.

c. A three position switch shall be provided for each detector input. The switch shall function as follows:
   - Down (Momentary) – Call is placed into the controller on the appropriate input in parallel with field input
   - Up (Lock) – Call is placed into the controller on the appropriate input in parallel with field input.
   - Center (Lock) – Normal Operation field output of detector is connected to the controller unit.

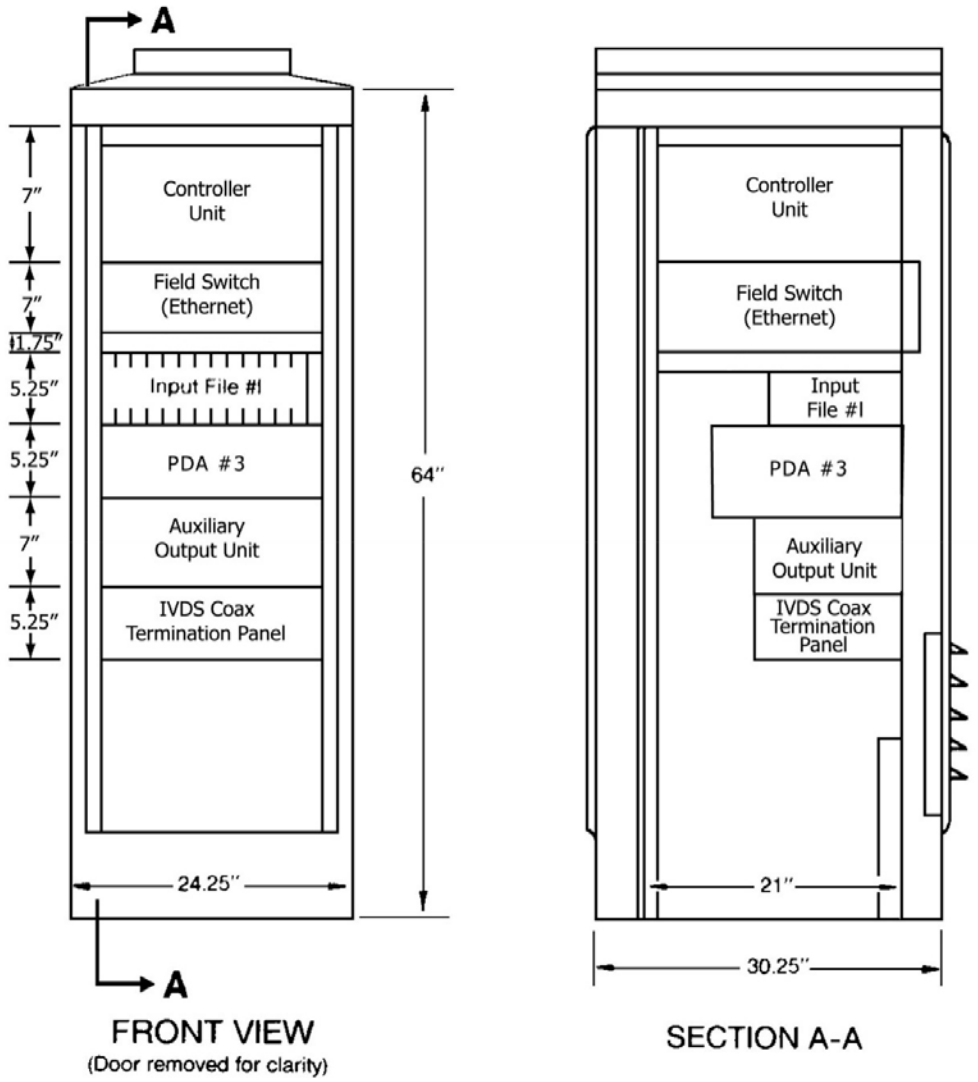

Figure 925-1 Typical 334 Cabinet Configuration

B. Fabrication

1. Cabinet

The signal cabinet shall be manufactured of aluminum with a minimum thickness of 0.125 inches (3 mm).

Ensure that the cabinet exterior has a smooth, uniform "bare" aluminum finish with all joints between adjoining cabinet components (sides and bottom) continuously welded on the outside to prevent the intrusion of moisture and dust.

Ensure that all welds are free of cracks, blow holes and other irregularities.

Ensure that shelves inside the cabinet are vented in order to allow circulation of air throughout the cabinet. Required shelves include but are not limited to those used for the input file, output file, and PDA.

Use a cabinet door that is double flanged on all four sides to prevent the entry of dirt and liquids when the door is open.

Install a gasket formed around the door opening to insure a weather tight seal when the door is secured.

Attach the door to the cabinet housing by a continuous tamper proof hinge.

Equip each cabinet with a Corbin #2 lock and one key. Police panel type locks are not acceptable.

Install an aluminum back panel in the cabinet, mounted on standoffs, to facilitate mounting of internal components.

Install exterior aluminum mounting brackets, which extend a minimum of 1.75 inches (44 mm) and a maximum of 2.5 inches (63 mm) from the top and bottom of the cabinet.

Use brackets that extend across the full width of the cabinet back on the top and bottom.

Provide these brackets with holes for mounting to a flat surface with screws and vertical slots for banding to steel, concrete or wooden signal poles.

C. Acceptance

Refer to Subsection 925.2.02 for compliance with CALTRANS QPL.

D. Materials Warranty

Refer Subsection 925.2.01.D for Materials Warranties.

Table 925 – 4 Model 332 Default Input Files Assignment Detail

Upper Input File (I)	**Slot**		**1**	**2**	**3**	**4**	**5**	**6**	**7**	**8**	**9**	**10**	**11**	**12**	**13**	**14**
	Type		**Det**	**Det**	**Det**	**Det**	**Det**	**Det**	**Det**	**Det**	**Det**			**DC**	**DC**	**DC**
	Channel 1	**C1 Pin**	56	39	63	47	58	41	65	49	60		80	67	68	81
		Function	Ph1	Ph2	Ph2	Ph2 CALL	Ph3	Ph4	Ph4	Ph4 CALL	Ph1		INT ADV	Ph2 PED	Ph6 PED	FLASH
		Field Term	TB-2 1,2	TB-2 5,6	TB-2 9,10	TB-4 1,2	TB-4 5,6	TB-4 9,10	TB-6 1,2	TB-6 5,6	TB- 6 9,10		NC	TB- 8 4,6	TB- 8 7,9	NC
	Channel 2	**C1 Pin**	56	43	76	47	58	45	78	49	62		53	69	70	82
		Function	Ph1	Ph2	Ph2	Ph2 CALL	Ph3	Ph4	Ph4	Ph4 CALL	Ph3		MCE	Ph4 PED	Ph8 PED	STOP TIME
		Field Term	TB-2 3,4	TB-2 7,8	TB-2 11,12	TB-4 3,4	TB-4 7,8	TB-4 11,12	TB-6 3,4	TB-6 7,8	TB-6 11,12		NC	TB-8 5,6	TB-8 8,9	NC
Lower Input File (J)	**Slot**		**1**	**2**	**3**	**4**	**5**	**6**	**7**	**8**	**9**	**10**	**11**	**12**	**13**	**14**
	Type		**Det**	**Det**	**Det**	**Det**	**Det**	**Det**	**Det**	**Det**	**Det**			**TBA**	**TBA**	**DC**
	Channel 1	**C1 Pin**	55	40	64	48	57	42	66	50	59		54	71	72	51
		Function	Ph5	Ph6	Ph6	Ph6 CALL	Ph7	Ph8	Ph8	Ph8 CALL	Ph5			EVA	EVB	R/R
		Field Term	TB-3 1,2	TB-3 5,6	TB-3 9,10	TB-5 1,2	TB-5 5,6	TB-5 9,10	TB-7 1,2	TB-7 5,6	TB- 7 9,10			TB- 9 4,6	TB- 9 7,9	TB- 9 10,12
	Channel 2	**C1 Pin**	55	44	77	48	57	46	79	50	61		75	73	74	52
		Function	Ph5	Ph6	Ph6	Ph6 CALL	Ph7	Ph8	Ph8	Ph8 CALL	Ph7			EVC	EVD	
		Field Term	TB-3 3,4	TB-3 7,8	TB-3 11,12	TB-5 3,4	TB-5 7,8	TB-5 11,12	TB-7 3,4	TB-7 7,8	TB-7 11,12			TB-9 5,6	TB-9 8,9	TB- 9 11,12

Table 925-5 Required Surge Arrestors for Model 332 Cabinet		
Field Terminal Block	**Terminals**	**Required Arrestor**
TB-8	1-12	Section 925.2.04.A.13.f
TB-9	10-12	Section 925.2.04.A.13.f
TB-9	4-9	Terminal Block only Section 925.2.04.A.13.f
TB-2, TB-3, TB-4, TB-5, TB-6, TB-7	1-12	Section 925.2.04.A.13.c

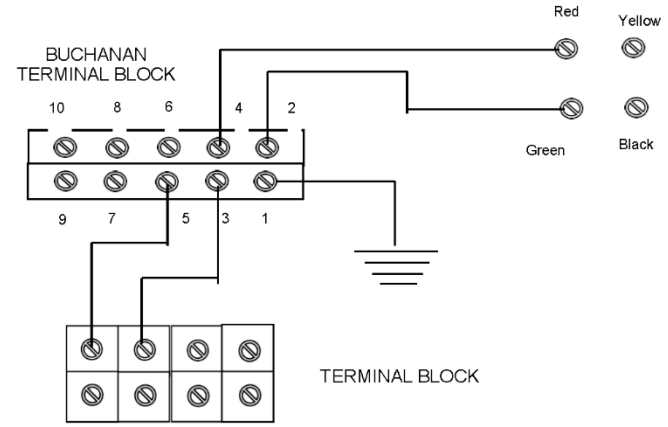

Note: For a typical signal installation, the Model 332 cabinet is the design standard.

Figure 925-2—Wiring Diagram for Dial-upCommunications

Table 925-6 Model 336S Default Input File Assignment Detail															
Slot		**1**	**2**	**3**	**4**	**5**	**6**	**7**	**8**	**9**	**10**	**11**	**12**	**13**	**14**
Type		**Det**	**Det**	**Det**	**Det**	**Det**	**Det**	**Det**	**Det**	**DC**	**TBA**	**TBA**	**DC**	**DC**	**DC**
Channel 1	**C1 Pin**	56	39	58	41	55	40	57	42	51	71	72	67	68	81
	Function	Ph1	Ph2	Ph3	Ph4	Ph5	Ph6	Ph7	Ph8	SE1	EVA	EVB	Ph2 PED	Ph6 PED	FLASH
	Field Term	TB-7 1,2	TB-7 5,6	TB-7 9,10	TB-8 1,2	TB-8 5,6	TB-8 9,10	TB-9 1,2	TB-9 5,6	TB- 5 1,2	TB- 5 5,6	TB- 5 9,10	TB- 4 1,2	TB- 4 5,6	NC
Channel 2	**C1 Pin**	47	43	49	45	48	44	50	46	52	73	74	69	70	82
	Function	Ph2 CALL	Ph2	Ph4 CALL	Ph4	Ph6 CALL	Ph6	Ph8 CALL	Ph8	R/R	EVC	EVD	Ph4 PED	Ph8 PED	STOP TIME
	Field Term	TB-7 3,4	TB-7 7,8	TB-7 11,12	TB-8 3,4	TB-8 7,8	TB-8 11,12	TB-9 3,4	TB-9 7,8	TB-5 3,4	TB-5 7,8	TB-5 11,12	TB-4 3,4	TB-4 7,8	NC

Table 925-7 Required Surge Arrestors for Model 336S Cabinet		
Field Terminal Block	**Terminals**	**Required Arrestor**
TB-4	1-12	Section 925.2.04.A.13.f
TB-5	1-4	Section 925.2.04.A.13.f
TB-5	5-12	Terminal Block only Section 925.2.04.A.13.f
TB-7, TB-8, TB-9	1-12	Section 925.2.04.A.13.c

Table 925-8 Model 334 Default Input File Assignment Detail															
Slot		**1**	**2**	**3**	**4**	**5**	**6**	**7**	**8**	**9**	**10**	**11**	**12**	**13**	**14**
Type		**Det**	**Det**	**Det**	**Det**	**Det**	**Det**	**Det**	**Det**	**Det**	**Det**	**Det**	**TBA**	**TBA**	**TBA**
Channel 1	**C1 Pin**	46	50	49	55	51	57	59	61	81	79	53	41	43	45
	Function	L1 D1	L2 D2	L1 Q1	L3 Q3	L1 MLA	L2 MLA	L3 MLA	L4 MLA		L3 D3				
	Field Term	TB-2 1,2	TB-2 5,6	TB-2 9,10	TB-3 1,2	TB-3 5,6	TB-3 9,10	TB-4 1,2	TB-4 5,6	TB-4 9,10	TB-5 1,2	TB-5 5,6	TB-5 9,10	TB-6 1,2	TB-6 5,6
Channel 2	**C1 Pin**	39	47	48	56	52	58	60	62	80	82	54	40	42	44
	Function	L1 P1	L2 P2	L2 Q2		L1 MLB	L2 MLB	L3 MLB	L4 MLB		L3 P3				
	Field Term	TB-2 3,4	TB-2 7,8	TB-2 11,12	TB-3 3,4	TB-3 7,8	TB-3 11,12	TB-4 3,4	TB-4 7,8	TB-4 11,12	TB-5 3,4	TB-5 7,8	TB-5 11,12	TB-6 3,4	TB-6 7,8

Table 925-9 Required Surge Arrestors for Model 334 Cabinet		
Field Terminal Block	**Terminals**	**Required Arrestor**
TB-2, TB-3, TB-4	1-12	Section 925.2.04.A.13.c
TB-5	1-4	Section 925.2.04.A.13.c

Table 925 - 10 Model 334 PDA Type 3 Output File			
	SP 1	**SP 2**	**SP 3**

	C1 Pin	Out #	Conn	Func	Field Term	C1 Pin	Out #	Conn	Func	Field Term	C1 Pin	Out #	Conn	Func	Field Term
SP R	2	0	C6-1	Warn 1	T4-7	4	2	C6-3	Lane 1 R	T4-4	7	5	C6-6	Lane 2 R	T4-1
SP Y	37	34	C6-9		T4-8	5	3	C6-4	Lane 1 Y	T4-5	8	6	C6-7	Lane 2 Y	T4-2
SP G	3	1	C6-2	Warn 2	T4-9	6	4	C6-5	Lane 1 G	T4-6	9	7	C6-8	Lane 2 G	T4-3

Table 925 - 11 Model 334 Auxiliary Output File

	SP 9					SP 10					SP 11				
	C1 Pin	Out #	Conn	Func	Field Term	C1 Pin	Out #	Conn	Func	Field Term	C1 Pin	Out #	Conn	Func	Field Term
SP R	97	53	C5-14	Lane 3 R	A124	94	50	C5-11	Not used	A121	91	48	C5-9	Not used	A114
SP Y	98	54	C5-15	Lane 3 Y	A125	95	51	C5-12	Not used	A122	101	37	C5-18	Not used	A115
SP G	99	55	C5-16	Lane 3 G	A126	96	52	C5-13	Not used	A123	93	49	C5-10	Not used	A116
	SP 12					**SP 13**					**SP 14**				
	C1 Pin	Out #	Conn	Func	Field Term	C1 Pin	Out #	Conn	Func	Field Term	C1 Pin	Out #	Conn	Func	Field Term
SP R	88	45	C5-6	Not used	A111	85	42	C5-3	Not used	A104	83	40	C5-1	Not used	A101
SP Y	89	46	C5-7	Not used	A112	86	43	C5-4	Not used	A105	100	36	C5-17	Not used	A102
SP G	90	47	C5-8	Not used	A113	87	44	C5-5	Not used	A106	84	41	C5-2	Not used	A103

925.2.5 Type ITS Cabinet Assemblies

A. Requirements

Ensure that the cabinet assembly meets the requirements of the CALTRANS Specifications as described in this document. In addition to the CALTRANS Specifications, ensure that the cabinet assembly conforms to the requirements listed below, which take precedence over conflicting CALTRANS Specifications.

1. Cabinet configuration:

   Supply cabinets in accordance with the following information and table 925-12.

   a. Cabinet Traffic Signal Application - Series 340
      - 340 - 4 Door Cabinet with "P" Base Ground Mount
      - 342 - 2 Door Cabinet with "170" Base (332) Ground Mount
      - 346 - 2 Door Cabinet with "170" Base (336S), Adaptor Mount

   b. Cabinet Traffic Management Application - Series 350
      - 354 - 2 Door Cabinet with "170" Base (332) Ground Mount
      - 356 - 2 Door Cabinet with "170" Base (336S) Adaptor Mount

Table 925-12 ITS Cabinet Configurations

Items	ITS Cabinet Versions				
	340	342	346	354	356
	Qty	Qty	Qty	Qty	Qty
Housing # 1/ Cage #1		1		1	
Housing # 2/Cage #2			1		1
Housing #3/Two Cage #1	1				
"J" Panel Cage #1	4	2		2	
"J" Panel Cage #2			2		2
Service Panel Assembly with AC -/EG Bus	1	1	1	1	1
Raw/Clean AC power Assembly	1	1	1	1	1
Raw Clean AC power Extension	1				
AC Clean Module Assembly	1				
DC Power/Comm Assembly	2	1	1	1	1
DC Power/Comm Extension	2	1		1	1
Laptop Shelf Assembly	2	1	1	1	1
Input Assembly	3	2	1	1	1
Six Pack Output Assembly	1			1	1
Fourteen Pack output Assembly	1	1	1		
PDA ITS Assembly	1	1	1	1	1
Control/Serial Bus harness	8	6	4	4	4
Serial Bus 3 Harness	3	1	1	1	1

NOTE: Input Assembly shall include a Model 218 SIU. Output Assembly shall include a Model 218 SIU, Model 214 AMU and Model 205 Transfer Relays. The PDA ITS (Traffic Signal Application) shall include two Model 204 Flasher Units, Model 212 CMU and two Model 216 Power Supply Units and attached harnesses. The PDA ITS (Traffic Management System Application) shall include Model 212 CMU and two Model 216 Power Supply Units and attached harnesses.

   c. Model 340 Cabinet:
      - Field termination panels
      - 9 – Flash Transfer Relays
      - 2 – Model 204 Flashers
      - Specific Equipment Layout and other cabinet devices determined on a project specific basis

d. Model 342 Cabinet:
- 1-Model 242 DC Isolator
- 6- Flash Transfer Relays
- 2-Model 204 Flashers

e. Model 346 Cabinet
- 1-Model 242 DC Isolator
- 6-Flash Transfer Relays
- 2-Model 204 Flasher
- 1-"M" Base Adapter installed (Base Mount Cabinets Only)
- 1-Aluminum Cover Plate for Cabinet Bottom (Pole Mount Cabinets Only)
- Model 354 Cabinet:
- Specific Equipment Layout and additional cabinet equipment determined on a project specific basis.
- Model 356 Cabinet
- Specific Equipment Layout and additional cabinet equipment determined on a project specific basis.
- 1-"M" Base Adapter installed (Base Mount Cabinets Only)
- 1-Aluminum Cover Plate for Cabinet Bottom (Pole Mount Cabinets Only)

Note: Include above components in cabinet at time of delivery.

Other auxiliary cabinet components such as controllers, load switches, etc. will be ordered as separate items.

2. Finish

Use cabinets that have a bare aluminum finish (see Subsection 925.2.04.B.1 for controller-cabinet minimum fabrication specifications).

3. Locks

Equip the main cabinet door with locks that accept No. 2 Corbin keys. Provide two sets of keys with each cabinet. One set of keys is defined as one – No. 2 key and one - police panel key.

4. Power

Equip the cabinet assemblies with an ITS power distribution assembly to generate AC and DC power for the electronic components, except the DC power for the controller units.

5. Mounting

Equip the cabinets for pole or base mounting, as specified in the Plans.

a. Base Mount

Supply Model 346 and 356 cabinets, when specified as base mount, with a "M" base-mounting adapter installed.

b. Pole Mount

Supply Model 346 and 356 cabinets, when specified as pole mount, with two exterior pole mounting brackets that allow for mounting on steel, concrete, and timber poles.

Ensure that the bracket mounting holes are properly reinforced with metal plates of adequate size and strength, welded longitudinally across the inside depth of the cabinet.

Ensure that the exterior-mounting bracket is shipped installed on the cabinet housing. Additionally, provide an aluminum plate, which covers the bottom cabinet opening.

2. Cabinet Light

Include in each cabinet one fluorescent strip lighting fixture mounted inside the top front portion of the cabinet. Do not use a screw in type fluorescent lamp.

The fixture includes a cool white lamp, covered, and operated by a normal power factor, UL listed ballast.

Install a door-actuated switch to turn on the cabinet light when either door is opened.

3. Cabinet Interlock

Do not install the interlock circuit, as detailed in the CALTRANS Specifications.

4. Laptop Shelf

Equip each Model 334, 332, and 336S cabinet with a hinged aluminum shelf and integrated storage compartment mounted on the front door, inside the cabinet assembly. To allow proper ventilation throughout the cabinet, a sliding shelf/drawer shall not be mounted in the rack assembly. The shelf shall have a smooth, non-slip surface, sufficient for use as a writing platform and of sufficient size and stability to support a typical laptop computer when extended. The shelf shall have rounded or insulated edges that do not have the potential to harm the user. The shelf shall lock into place when folded for storage. Locking the shelf for storage and/or extending it for use shall not require the use of any tool.

5. Red Enable Board Cover

   The Output File Assembly shall implement a hinged, clear, polycarbonate cover to protect the Red Enable Board during normal operation. This cover shall be hinged on the left or right side. When closed, the side opposite the hinged shall be secured to the Output File Assembly without the use of any hardware or tool. When fully opened, the cover shall not inhibit the removal, replacement or configuration of the Red Enable Board. Removal and replacement of the Red Enable Board shall not require the removal of the protective cover.

6. Test Program

   Supply each cabinet with a diagnostic test program, which verifies the operation of the cabinet. Ensure that the program can test cabinet wiring related to the output file, input file, and police panel and flash switches. In addition, ensure that the program can check the operation of the SIU, AMU and CMU by generating all possible conflicts, in sequence.

7. Surge Protection

   Equip each cabinet with devices to protect the control equipment from surges and over voltages.

   Design the surge protector panels to allow for adequate space for a wire connection and surge protector replacement without the removal of terminal blocks or panels. Provide surge protectors for the input sections as detailed below and as shown in the Input Terminal and Surge Arrestor Detail.

   Supply surge protectors that meet the following Specifications.

   a. AC Service Input

      - Include a surge protection unit for each cabinet on the AC service input that meets or exceeds the following requirements:
        - Provide a hybrid type power line surge protection device on a service panel which plugs into a 12 pin Beau Connector which mounts on a service panel.
      - Install the protector between the applied line voltage and earth ground. Use a surge protector capable of reducing the effect of lightning transient voltages applied to the AC line that conforms to the following:
        - Peak surge current for an 8 x 20 μs waveform:
        - 20,000A for 20 occurrences
        - Clamp voltage @ 20,000A
        - 280V max
        - Maximum continuous operating current:
        - @ 120V / 60 Hz 10A
        - Series Inductance:
        - AC Line/AC Neutral - 200 microhenries
        - Response time:
        - Voltage never exceeds 280V during surge
        - Spike suppression for +/- 700 V spike:
        - +/- 40 V deviation from sine wave at all phases angles between 0 and 180 degrees.
      - Provide a protector with the following terminals:
        - Main Line (AC line first stage terminal)
        - Main Neutral (AC neutral input terminal)
        - Equipment Line In (AC line second stage input terminal, 10A)
        - Equipment Line Out (AC line second stage output terminal, 10A)
        - Equipment neutral out (neutral terminal to protected equipment)
        - GND (Earth connection)

- Supply a protector that is epoxy encapsulated in a flame-retardant material.
- Configure the Equipment Line Out to provide power to the Type 2070 and to the 24 V power supply.

b. Inductive Loop Detector Inputs

Protect each inductive loop detector channel input by an external surge protection device that meets or exceeds the following requirements:

- A three-terminal device, two (2) of which are connected across the signal inputs of the detector with the third connected to the chassis ground to protect against common mode damage.
- Instantly clamps differential mode surges (induced voltage across the loop detector input terminals) via a semiconductor array. The array appears as a low capacitance to the detector.
- Clamps common mode surges (induced voltage between the loop leads and ground) via solid state clamping devices.
- Withstand 25-100A surge current occurrences of a 10 x 700 μs waveform.
- Have the following clamp characteristics:

Maximum break over voltage:	170 V
Maximum on-stage clamping voltage:	3V
Response Time:	<5 ns
Off-stage leakage current:	<10 μA
Capacitance:	less than 220 pf

- Ensure that the unit also meets the following minimum requirements:

Peak surge current:	6 times
Differential mode:	400 A (8 x 20 ms)
Common mode:	1,000 A (8 x 20 ms)
Estimated occurrences:	500 @ 200 A
Response time:	40 ns
Input capacitance:	35 pF typical
Temperature:	-40° F to +185° F (-40° C to 85° C)
Mounting:	No. 10-32 x 3/8-inch (No. 5 x 10 mm) bolt
Clamp voltage @ 400 A diff. Mode:	30 V max.
Clamp voltage @ 1,000 A comm.. Mode:	30 V max.

c. Signal Load Switches (Switchpacks)

Provide the output of the switchpack in the output file with transient protection via the nine position transient protection device in the output file. Protect switchpacks from surges on the AC output lines.

Ensure that the transient protectors meet or exceed these requirements:

- Steady state sinusoidal voltage (RMS) rating at 50 to 60 Hz of at least 150 V at 77 ºF (25 °C)
- Steady state applied DC voltage rating of at least 200 V at 77 ºF (25 °C)
- Transient energy rating is of at least 80 J for a single impulse of 10/1,000 μs current waveform at 77 ºF (25 °C)
- Peak current rating of 6,500 A for a single impulse of 8/20 μs waveform with the rated continuous voltage applied
- Varistor voltage of at least 212 V at 1.0mA of DC current applied for the duration of 20 μs to 5s
- Clamping voltage of at least 395 V with an applied 8/20 μs impulse of 100 A
- Typical capacitance at a frequency of 0.1 to 1.0 MHz of 1600 pF
- Two-terminal device, one of which is connected to the AC output of the signal load switch on the output file terminals (backside of the field terminals) with the other connected to AC neutral

d. Communication Inputs

Protect low voltage communications input as it enters the cabinet with a solid-state surge protection unit that meets or exceeds these requirements:

- Dual pair (4-wire) module with a printed circuit board connector, double sided and gold plated for reliability
- Ability to mate with and be installed in a 10-circuit Buchanan connector Part Number PCBIB10S or Tyco Part Number 2-1437410-3 or equivalent
- Usable as two independent signal pairs
- The data circuits pass through the protection in a serial fashion
- C2 connector of the 2070 controller that terminates on the line side of the unit
- Communication field wires for this local side that terminate on the line side of the unit
- Ground terminals connected to power ground
- Ensure that the unit meets the following minimum requirements:

Peak surge current:	10 kA (8 x 20 μs wave shape)
	500A (10 x 700 μs wave shape)
Occurrences @ peak:	50 typical
Response time:	<1ns
Voltage Clamp:	8V line to line
Series Resistance:	24 Ω total
Temperature	-40 ºF (-40 ºC) to +185 ºF (85 ºF)
Primary protector:	3 element gas tube 5kA, (8 x 20μs wave shape), per side
Secondary protector:	Silicon avalance, 1.5 kW minimum

e. Low Voltage DC Inputs

Provide an external surge protection device for each low voltage DC input channel which meets the same requirements as the communication inputs with the following exception of the Voltage clamp, which shall be 30 V line-to-line.

12. Type 212 ITS Cabinet Monitor Unit

a. Introduction

Supply each cabinet with Type 212 ITS Cabinet Monitor Unit (CMU). Ensure the Type 212 CMU meets the CALTRANS TEES Specifications and functions as a unit with the a Type 214 Auxiliary Monitor Unit to provide the following monitoring functions: Cabinet Power Supplies,; Conflicting Channel Monitor, Serial Bus1 and 3 Error; Message 62; Diagnostic Error; Multiple Channel Inputs; Lack of Signal Inputs; Yellow Clearance; Yellow plus Red Clearance; Police and Power Distribution Switch Monitor; door Switches and Main Contactor Status; Circuit Breakers; Flash Unit Output Status; and AC Line Level Sense. Ensure the Unit supplied is listed on the most recent California Department of Transportation Qualified Products List (QPL).

b. Configuration

Supply Type 212 CMU capable of monitoring up to 28 physical load switch channels (RYG) plus 4 virtual channels for a total of 32 channels.

c. Programming

Ensure complete programming of the Type 212 CMU is by an interchangeable Datakey nonvolatile memory device. The Datakey shall store all of the configuration parameters. Ensure the programming of the datakey can easily be accomplished by a PC and provide datakey and programming device with the delivery of the first unit ordered. Orders of multiple ITS cabinets require delivery or 1 programming device with PC software for every 10 cabinets.

d. Logging

Ensure the Type 212 CMU maintains a non-volatile event log recording. The complete intersection status as well as previous fault events, AC Line events, configuration changes, monitor resets, cabinet temperature and true RMS voltages for all field inputs. A real time clock time shall stamp each log event with the time and date.

Ensure a Signal Sequence History Log is stored in nonvolatile memory. The information stored in the signal sequence log shall provide graphic displays of up to 30 seconds of signal status prior to the fault trigger event with 50 ms resolution.

The Type 212 CMU shall be provided with PC Software that allows a review of status, event log review and archival.

13. Type 214 ITS Auxiliary Monitor Unit
    a. Introduction

    Supply each ITS cabinet output assembly with a Type 214 ITS Auxiliary Monitor Unit (AMU). Ensure the Type 214 CMU meets the CALTRANS TEES Specifications and functions with the a Type 212 Cabinet Monitor Unit to provide cabinet monitoring functions to perform the following monitoring functions: Cabinet Power Supplies, Conflicting Channel Monitor, Serial Bus 1 and 3 Error; Message 62; Diagnostic Error; Multiple Channel Inputs; Lack of Signal Inputs; Yellow Clearance; Yellow plus Red Clearance; Police and Power Distribution Switch Monitor; door Switches and Main Contactor Status; Circuit Breakers; Flash Unit Output Status; and AC Line Level Sense. Ensure the Unit supplied is listed on the most recent California Department of Transportation Qualified Products List (QPL). The Type 214 AMU shall provide the field signal sensing.

    b. Current Monitoring

    Supply Type 214 AMU capable of operating in a 14 channel mode or a 6 channel mode. Ensure the address select is correct for the output assembly in which the Model 214 AMU is installed.

    c. Diagnostics

    Ensure the Type 214 AMU has self diagnostic tests that execute continuously to provide for correct operation to properly monitor the current for use with LED signal heads.

14. Type 218 ITS Serial Interface Unit
    a. Introduction

    Supply each input and output assembly with a Type 218 ITS Serial Interface Unit (SIU). Ensure the Type 218 ITS SIU supplied meets the CALTRANS TEES Specifications. Ensure the Unit supplied is listed on the most recent California Department of Transportation Qualified Products List (QPL). The Type 218 ITS SIU shall provide the interface between the 2070 controller and the input and output files.

    b. Configuration

    Supply Type 218 SIU capable of operating in all input and output modes. Provide a Model 218 SIU that is configured correctly for the input or output file for which it is supplied.

    c. Programming

    Ensure programming of the Type 218 SIU is programmed by assembly mounted address jumpers and that no other setup is required.

    d. Diagnostics

    Ensure the Type 218 SIU supplied has a complete set of internal diagnostics self-tests run continuously to monitor critical components of the unit. Provide unit with a front panel LED indicator that can be used to report the current Input/Output assembly address assignment of the unit for cabinet configuration verification. Ensure unite has a diagnostic EIA-232 port on the front panel to interface with the SIU 218 functions.

15. Model 242 DC Isolator

    Provide Model 242 DC Isolators that are in accordance with the latest version of CALTRANS Specifications as referenced earlier in this section. Provide isolators that:

    - Allow 242 isolator input signal polarity to easily be inverted without the use of tools. Acceptable methods are removable jumpers or dip switches. Unacceptable methods are soldering or desoldering a diode or resistor.
    - Output is OFF for input voltages greater than 12 volts;
    - Output is ON for voltages of less than 8 volts that have a duration of at least 5 to 25 ms (optional 2-7 ms);
    - Minimum output pulse width is 100 ms with a valid input (can be disabled);
    - Output is optically isolated open collector NPN transistor;
    - Capable of sinking 50 ma when on;
    - Can register a new input within 25 ms of the old signal going away; and
    - Output clamped on power up and down

16. Model 200 Switchpack

    Provide Model 200 Switchpacks that are in accordance with the latest version of CALTRANS Specifications as referenced earlier in this section.

17. Model 204 Flasher Unit

    Provide Model 204 Flasher Units that are in accordance with the latest version of CALTRANS Specifications as referenced earlier in this section.

18. Flash Transfer Relay

    Provide Flash Transfer Relays that are in accordance with the latest version of CALTRANS Specifications as referenced earlier in this section.

19. Cabinet Model 342

    Provide Cabinet Model 342 that meets the CALTRANS Specification with the addition of surge protection as detailed in Table 925-13 Model 342 ITS Cabinet Default Input Files Assignment Detail, Table 925-14 Required Surge Arrestors for Model 342 ITS Cabinet, and Table 925-15 Model 342 & 346 ITS Cabinet Default Output File Assignment Detail.

    Supply Model 342 with lower input panel cabinets, with housing Type 1, and all components as described in these Specifications.

    Supply cabinets having two input files which conform to the CALTRANS Specifications and configured to accept two 2070 controllers in the top portion of the cabinet.

    Configure the cabinet for dial up communications. Mount a two (2) circuit Buchanan connector on the right side panel (from rear door).

    Mount a phone jack with a RJ11 connector above or to the right of the Buchanan terminal block.

    Wire the phone jack to the Buchanan and to the Terminal Block (TB0) in accordance with Figure 925-3.

20. Cabinet Model 346 (Base Mount)

    This unit meets the CALTRANS Specification with the addition of approximately 6 additional inches (150 mm) of cabinet height exclusive of the "M" base adapter. Configure the internal component layout so that the additional space is available in the bottom area of the cabinet cage. Ensure that the field wiring input panels and surge protection conform to Table 925-16 Model 346 ITS Cabinet Default Input File Assignment Detail, Table 925-17 Required Surge Arrestors for Model 346 Cabinet, and Table 925-15 Model 342 & 346 Default ITS Cabinet Default Output File Assignment.

21. Cabinet Model 346 (Pole Mount)

    Ensure that this unit meets the requirements of Subsection 925.2.04.A.19 above, except that the cabinet is configured for pole mounting as specified in the General Requirements for Type ITS Cabinet Assemblies.

22. Cabinet Model 340

    The Model 340 cabinet configuration will be determined by the special provisions of the project.

    Ensure that the input and output port assignments are compatible with the 2070 controller as applicable according to the required number of input/outputs. Ensure that the 340 cabinet uses standard ITS cabinet input and output file units.

    Equip the cabinet with a C2 connector harness with field terminals protected with surge protectors for communication inputs as specified under communications inputs.

    Ensure that the cabinet has four full-size doors to allow complete access from the front or back of the cabinet. Design the rack assembly to mount in CALTRANS standard rails to allow for a Model 204 flasher.

    Provide a receptacle to accept the plug in power distribution assembly card guides and edge connectors for the input file card guides to support the conflict monitor, and load switches and flash transfer relays.

B. Fabrication

Refer to Subsection 925.2.04.B.1 for controller cabinet minimum fabrication Specifications.

C. Acceptance

Refer to Subsection 925.2.02 for compliance with CALTRANS QPL.

D. Materials Warranty

Refer Subsection 925.2.01.D for Materials Warranties.

Table 925 – 13 Model 342 ITS Cabinet Default Input Files Assignment Detail

Input File	Chan	Item	File Slot 1	2	3	4	5	6	7	8	9	10	11	12
1	Upper	SIU Pin	A5	A6	A7	A8	A9	A10	A11	A12	A13	A14	A15	A16
		SIU Byte,Bit	2,6	3,0	3.2	3,4	3,6	4,0	4,2	4,4	4,6	5,0	5,2	5,4
		SIU Input #	7	9	11	13	15	17	19	21	23	25	27	29
		2070 Input #	17	0	28	8	22	6	43	25	51	32	12	38
		2070 Port	3.2	1.1	4.5	2.1	3.7	1.7	6.4	4.2	7.4	5.1	2.5	5.7
		Function	Ph 1 Det	Ph 2 Det	Ph 2 Det	Ph 2 Det	Ph 3 Det	Ph 4 Det	Ph 4 Det	Sp Det 1	Sp Det 5	Pd 2 Det	Pre 1	Pre 5
		Field Term	TB-2 1,2	TB-2 5,6	TB-2 9,10	TB-4 1,2	TB-4 5,6	TB-4 9,10	TB-6 1,2	TB-6 5,6	TB-6 9,10	TB-8 4,6	TB-9 10,12	TB-9 5,6
	Lower	SIU Pin	B5	B6	B7	B8	B9	B10	B11	B12	B13	B14	B15	B16
		SIU Byte,Bit	2,7	3,1	3,3	3,5	3,7	4.1	4,3	4,5	4,7	5,1	5,3	5,5
		SIU Input #	8	10	12	14	16	18	20	22	24	26	28	30
		2070 Input #	21	4	41	19	2	30	10	53	52	34	13	39
		2070 Port	3.6	1.5	6.2	3.4	1.3	4.7	2.3	7.6	7.5	5.3	2.6	5.8
		Function	Ph 1 Det	Ph 2 Det	Ph 2 Det	Ph 3 Det	Ph 4 Det	Ph 4 Det	Ph 4 Det	Sp Det 2	Sp Det 6	Pd 4 Det	Pre 2	Pre 6
		Field Term	TB-2 3,4	TB-2 7,8	TB-2 11,12	TB-4 3,4	TB-4 7,8	TB-4 11,12	TB-6 3,4	TB-6 3,4	TB-6 11,12	TB-8 5,6	TB-9 11,12	TB-9 8,9
	Opto Inputs	SIU Pin	B25	A26	B26	A27								
		SIU Byte,Bit	8,7	9,0	9,1	9,2								
		SIU Input #	Opto In 1	Opto In 2	Opto In 3	Opto In 4								
		2070 Input #	46	14	47	45								
		2070 Port	6.7	2.7	6.6	6.8								
		Function	Flsh Sen	MCE	Int Adv	S T								
2	Upper	SIU Pin	A5	A6	A7	A8	A9	A10	A11	A12	A13	A14	A15	A16
		SIU Byte,Bit	2,6	3,0	3.2	3,4	3,6	4,0	4,2	4,4	4,6	5,0	5,2	5,4
		SIU Input #	7	9	11	13	15	17	19	21	23	25	27	29
		2070 Input #	16	1	29	9	18	7	44	54	49	33	36	15
		2070 Port	3.1	1.2	4.6	2.2	3.3	1.8	6.5	7.7	7.2	5.2	5.5	2.8
		Function	Ph 5 Det	Ph 6 Det	Ph 6 Det	Ph 6 Det	Ph 7 Det	Ph 8 Det	Ph 8 Det	Sp Det 3	Sp Det 7	Pd 6 Det	Pre 3	Spare 1
		Field Term	TB-3 1,2	TB-3 5,6	TB-3 9,10	TB-5 1,2	TB-5 5,6	TB-5 9,10	TB-7 1,2	TB-7 5,6	TB-7 9,10	TB-8 7,9	TB-9 4,6	TB-8 1,3
	Lower	SIU Pin	B5	B6	B7	B8	B9	B10	B11	B12	B13	B14	B15	B16
		SIU Byte,Bit	2,7	3,1	3,3	3,5	3,7	4.1	4,3	4,5	4,7	5,1	5,3	5,5
		SIU Input #	8	10	12	14	16	18	20	22	24	26	28	30
		2070 Input #	20	5	42	18	3	31	11	55	50	35	37	40
		2070 Port	3.5	1.6	6.3	3.3	1.4	4.8	2.4	7.8	7.3	5.4	5.6	6.1
		Function	Ph 5 Det	Ph 6 Det	Ph 6 Det	Ph 7 Det	Ph 8 Det	Ph 8 Det	Ph 8 Det	Sp Det 4	Sp Det 8	Pd 8 Det	Pre 4	Spare 2
		Field Term	TB-3 3,4	TB-3 7,8	TB-3 11,12	TB-5 3,4	TB-5 7,8	TB-5 11,12	TB-7 3,4	TB-7 7,8	TB-7 11,12	TB-8-8,9	TB-9 7,9	TB-8 2,3
	Opto Inputs	SIU Pin	B25	A26	B26	A27								
		SIU Byte,Bit	8,7	9,0	9,1	9,2								
		SIU Input #	Opto In 1	Opto In 2	Opto In 3	Opto In 4								
		2070 Input #	NA	NA	NA	NA								
		2070 Port												
		Function												

Table 925 – 14 Required Surge Arrestors for Model 342 ITS Cabinet		
Field Terminal Block	**Terminals**	**Required Arrestors for Model 342 Cabinet**
TB - 8	1-12	Section 925.2.05.A.10.f
TB - 9	10-12	Section 925.2.05.A.10.f
TB - 9	4-9	Section 925.2.05.A.10.f
TB - 2, TB - 3, TB - 4, TB - 5, TB - 6, TB - 7	1-12	Section 925.2.05.A.10.c

Table 925 - 15 Model 342 & 346 ITS Cabinet Default Output File Assignment Detail

	Switch Pack													
Item	**1**	**2**	**3**	**4**	**5**	**6**	**7**	**8**	**9**	**10**	**11**	**12**	**13**	**14**
SIU Pin	A2	B3	A5	B6	A8	B9	A11	B12	A14	B15	A17	B18	A20	B21
SIU Byte, Bit	2,0	2,3	2,6	3,1	3,4	3,7	4,2	4,5	5,0	5,3	5,6	6,1	6,4	6,7
SIU Output #	1	4	7	10	13	16	19	22	25	28	31	34	37	40
2070 Output #	13	10	8	5	2	0	29	26	24	21	18	16	53	50
2070 Output Port	2.6	2.3	2.1	1.6	1.3	1.1	4.6	4.3	4.1	3.6	3.3	3.1	7.6	7.3
AMU Pin	C16	C17	C18	C19	C20	C21	C22	C23	C24	C25	C26	C27	C28	C29
AMU Channel	1	2	3	4	5	6	7	8	9	10	11	12	13	14
Field Term	TR-1 1,2	TR-2 1,2	TR-3 1,2	TR-4 1,2	TR-5 1,2	TR-6 1,2	TR-7 1,2	TR-8 1,2	TR-9 1,2	TR-10 1,2	TR-11 1,2	TR-12 1,2	TR-13 1,2	TR-14 1,2
Function	Ph 1 Rd	Ph 2 Rd	Pd 2 DW	Ph 3 Rd	Ph 4 Rd	Pd 4 DW	Ph 5 Rd	Ph 6 Rd	Pd 6 DW	Ph 7 Rd	Ph 8 Rd	Pd 8 DW	Ov A Rd	Ov B Rd
SIU Pin	B2	A4	B5	A7	B8	A10	B11	A13	B14	A16	B17	A19	B20	A22
SIU Byte, Bit	2,1	2,4	2,7	3,2	3,5	4,0	4,3	4,6	5,1	5,4	5,7	6,2	6,5	7,0
SIU Output #	2	5	8	11	14	17	20	23	26	29	32	35	38	41
2070 Output #	14	11	32	6	3	34	30	27	33	22	19	35	54	51
2070 Output Port	2.7	2.4	5.1	1.7	1.4	5.3	4.7	4.4	5.2	3.7	3.4	5.4	7.7	7.4
AMU Pin	B16	B17	B18	B19	B20	B21	B22	B23	B24	B25	B26	B27	B28	B29
AMU Channel	1	2	3	4	5	6	7	8	9	10	11	12	13	14
Field Term	TR-1 3,4	TR-2 3,4	TR-3 3,4	TR-4 3,4	TR-5 3,4	TR-6 3,4	TR-7 3,4	TR-8 3,4	TR-9 3,4	TR-10 3,4	TR-11 3,4	TR-12 3,4	TR-13 3,4	TR-14 3,4
Function	Ph 1 Yel	Ph 2 Yel	Pd 2 PC	Ph 3 Yel	Ph 4 Yel	Pd 4 PC	Ph 5 Yel	Ph 6 Yel	Pd 6 PC	Ph 7 Yel	Ph 8 Yel	Pd 8 PC	Ov A Yel	Ov B Yel
SIU Pin	A3	B4	A6	B7	A9	B10	A12	B13	A15	B16	A18	B19	A21	B22
SIU Byte, Bit	2,2	2,5	3,0	3,3	3,6	4,1	4,4	4,7	5,2	5,5	6,0	6,3	6,6	7,1
SIU Output #	3	6	9	12	15	18	21	24	27	30	33	36	39	42
2070 Output #	15	12	9	7	4	1	31	28	25	23	20	17	55	52
2070 Output Port	2.8	2.5	2.2	1.8	1.5	1.2	4.8	4.5	4.2	3.8	3.5	3.2	7.8	7.5
AMU Pin	A16	A17	A18	A19	A20	C21	C22	C23	A24	A25	A26	A27	A28	A29
AMU Channel	1	2	3	4	5	6	7	8	9	10	11	12	13	14
Field Term	TR-1 5,6	TR-2 5,6	TR-3 5,6	TR-4 5,6	TR-5 5,6	TR-6 5,6	TR-7 5,6	TR-8 5,6	TR-9 5,6	TR-10 5,6	TR-115,6	TR-12 5,6	TR-13 5,6	TR-14 5,6
Function	Ph 1 Grn	Ph 2 Grn	Pd 2 W	Ph 3 Grn	Ph 4 Grn	Pd 4 W	Ph 5 Grn	Ph 6 Grn	Pd 6 W	Ph 7 Grn	Ph 8 Grn	Pd 8 W	O A Grn	O B Grn

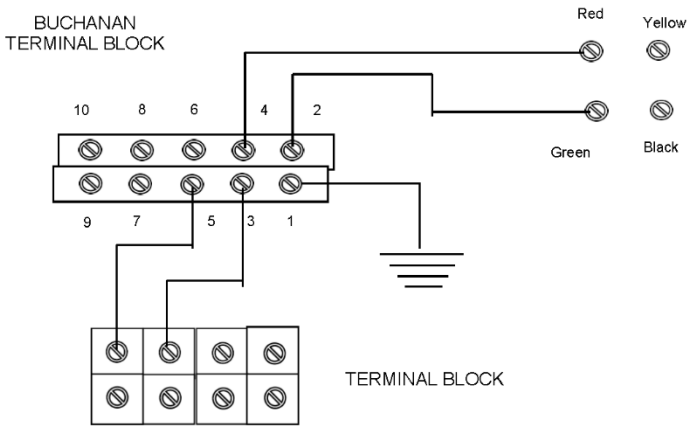

Note: For a typical signal installation, the Model 342 cabinet is the design standard.

Figure 925-3—Wiring Diagram for Dial-upCommunications

Table 925 - 16 Model 346 ITS Cabinet Default Input Files Assignment Detail

Input File	Channel	Item	File Slot 1	2	3	4	5	6	7	8	9	10	11	12
1	Upper	SIU Pin	A5	A6	A7	A8	A9	A10	A11	A12	A13	A14	A15	A16
		SIU Port	2,6	3,0	3.2	3,4	3,6	4,0	4,2	4,4	4,6	5,0	5,2	5,4
		SIU In #	7	9	11	13	15	17	19	21	23	25	27	29
		2070 In #	17	0	19	2	16	1	18	3	12	36	32	33
		2070 Port	3.2	1.1	3.4	1.3	3.1	1.2	3.3	1.4	2.5	5.5	5.1	5.2
		Function	Ph 1 Det	Ph 2 Det	Ph 3 Det	Ph 4 Det	Ph 5 Det	Ph 6 Det	Ph 7 Det	Ph 8 Det	Pre 1	Pre 3	Pd 2 Det	Pd 6 Det
		Fld Term	T-7 1,2	T-7 5,6	T-7 9,10	T-8 1,2	T-8 5,6	T-8 9,10	T-9 1,2	T-9 5,6	T-5 1,2	T-5 5,6	T-4 1,2	T-4 5,6
	Lower	SIU Pin	B8	B9	B10	B11	B12	B13	B14	B15	B16	B17	B18	B19
		SIU Port	2,7	3,1	3,3	3,5	3,7	4.1	4,3	4,5	4,7	5,1	5,3	5,5
		SIU In #	8	10	12	14	16	18	20	22	24	26	28	30
		2070 In #	8	4	10	6	9	5	11	7	13	37	34	35
		2070 Port	2.1	1.5	2.3	1.7	2.2	1.6	2.4	1.8	2.6	5.6	5.3	5.4
		Function	Ph 2 Det	Ph 2 Det	Ph 4 Det	Ph 4 Det	Ph 5 Det	Ph 6 Det	Ph 7 Det	Ph 8 Det	Pre 2	Pre 4	Pd 4 Det	Pd 8 Det
		Fld Term	T-7 3,4	T-7 7,8	T-7 11,12	T-8 3,4	T-8 7,8	T-8 11,12	T-9 3,4	T-9 7,8	T-5 3,4	T-5 7,8	T-4 3,4	T-4 7,8
	Opto	SIU Pin	B25	A26	B26	A27								
		SIU Port	8,7	9,0	9,1	9,2								
		SIU In #	Opto In 1	Opto In 2	Opto In 3	Opto In 4								
		2070 In #	46	14	47	45								
		2070 Port	6.7	2.7	6.6	6.8								
		Function	Flsh Sen	MCE	Int Adv	S T								

Table 925-17 Required Surge Arrestors for Model 346 ITS Cabinet		
Field Terminal Block	**Terminals**	**Required Arrestor**
TB-4	1-12	Section 925.2.05.A.10.f
TB-5	1-4	Section 925.2.05.A.10.f
TB-5	5-12	Terminal Block Only Section 925.2.04.A.10.f
TB-7, TB-8, TB-9	1-12	Section 925.2.05.A.10.c

925.2.6 Battery Backup System

A. Requirements

This specification is for establishing the minimum requirements for a complete emergency battery backup system for use with Light Emitting Diode Traffic Signal Modules at intersections with 332 cabinets. The Battery Backup System (BBS) shall include, but not be limited to the following: Inverter/Charger, Power Transfer Relay, Batteries, a separate manually operated non-electric Bypass Switch and all necessary hardware and interconnect wiring. The BBS shall be capable of providing power for full run-time operation for an "LED –only" intersection (all colors: red, yellow, green and pedestrian heads) or flashing mode operation and intersection Red LED's. The BBS shall be designed for outdoor applications, in accordance with the CALTRANS TEES.

Figure 925-4 Battery Backup Block Diagram

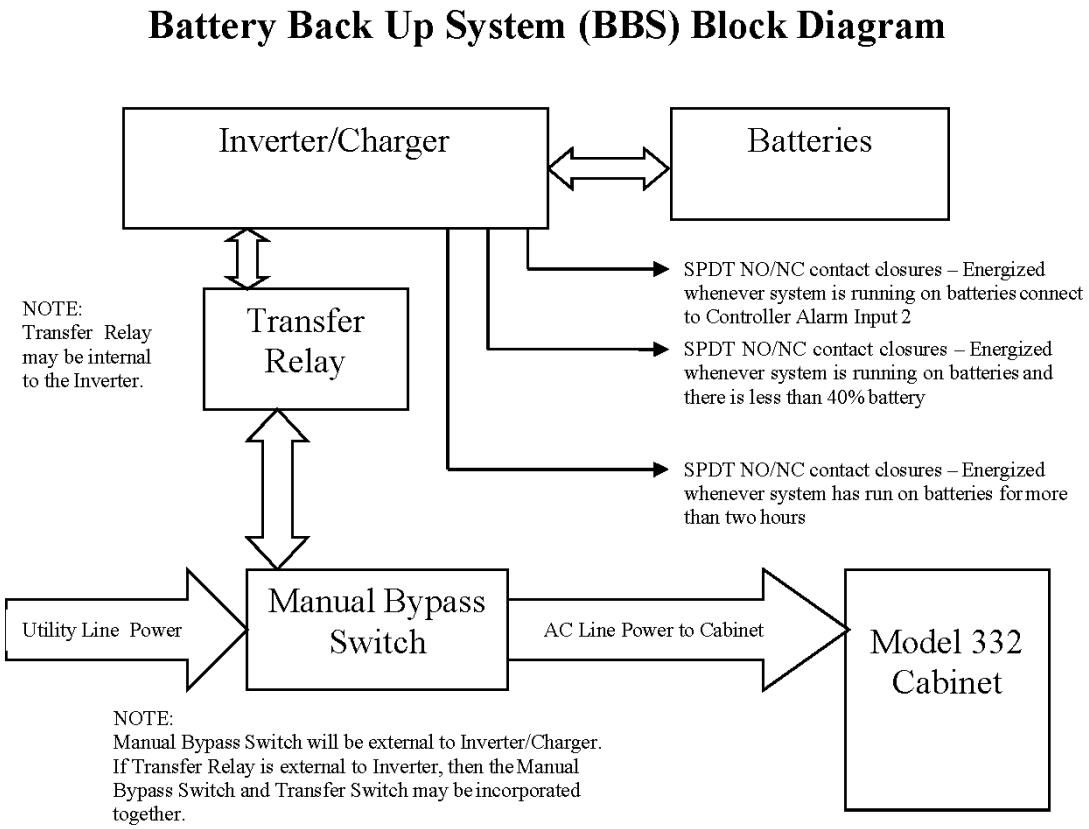

2. Operation:
   a. The BBS shall provide a minimum two (2) hours of full run-time operation for an "LED-only" intersection (minimum 700W/1000VA active output capacity, with 80% minimum inverter efficiency).
   b. The maximum transfer time allowed, from disruption of normal utility line voltage to stabilized inverter line voltage from batteries, shall be 65 milliseconds. The same maximum allowable transfer time shall also apply when switching from inverter line voltage to utility line voltage.
   c. The BBS shall include a Manual Bypass Switch which provides capability to transfer the power service to disable the BBS and operate only from the power service provided. The Manual Bypass Switch shall be as shown in Figure 925-5.

Figure 925 – 5 Manual Bypass Switch (Shown in normal BBS Mode)

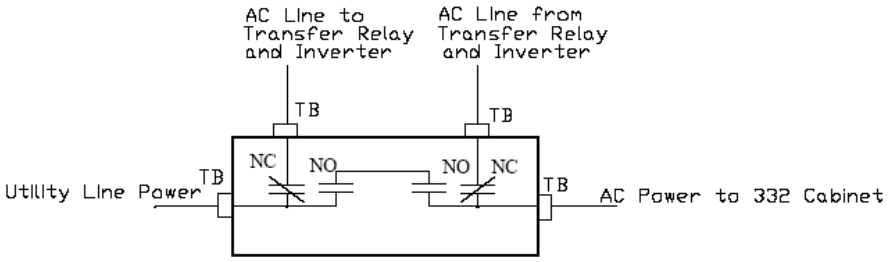

Notes:
1. TB - #8 Terminal Blocks
2. NO - Normally Open
3. NC - Normally Closed
4. NO/NC contacts shall all toggle simultaneously with one single manually operated switch.
5. Manual Bypass Switch shall only switch line. Neutral and Equipment Ground are not switched and shall be connected to 332 Cabinet buses.

d. The BBS shall provide the user with 3-sets of normally open (NO) and normally closed (NC) single-pole double-throw (SPDT) dry relay contact closures, available on a panel-mounted terminal block, rated at a minimum 120V/1A, and labeled so as to identify each contact. For typical configuration, see Figure 925-6.
   1) The first set of NO and NC contact closures shall be energized whenever the unit switches to battery power. Contact shall be labeled or marked "On Batt."
   2) The second set of NO and NC contact closures shall be energized whenever the battery approaches approximately 40% of remaining useful capacity. Contact shall be labeled or marked "Low Batt."
   3) The third set of NO and NC contact closures shall be energized two hours after the unit switches to battery power. Contact shall be labeled or marked "Timer."
   4) Relay contact activation shall be annunciated on the front panel via a visual indication. This can be either discreet LED, or part of LCD screen, etc.

Figure 925 – 6 Relay Contacts (NO/NC) available on panel-mounted terminal block (typ)

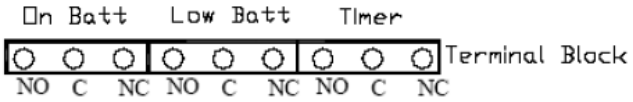

Notes:
1. NO/NC contacts may either share or use separate commons.

e. Operating temperature for both the inverter/charger, power transfer relay and manual bypass switch shall be –37 °C (-35F) to +74 °C (+165 F).

f. Both the Power Transfer Relay and Manual Bypass Switch shall be rated at 240VAC/30 amps, minimum

g. The BBS shall use a temperature-compensated battery charging system. The charging system shall compensate over a range of 2.5 – 4.0 mV/ °C (5-8 F) per cell. The temperature sensor shall be external to the inverter/charger unit. The temperature sensor shall come with 3 meters (10 feet) of wire. Ensure temperature sensor can be mounted to battery with ring terminal to prevent losing connectivity.

h. Batteries shall not be recharged when battery temperature exceeds 50 °C (122 F) ± 3 °C (6F).

i. BBS shall bypass the utility line power whenever the utility line voltage is outside of the following voltage range: 100VAC to 130VAC (± 2VAC).

j. When utilizing battery power, the BBS output voltage shall be between 110 VAC and 125 VAC, pure sine wave output, ≤ 3% THD, 60Hz ± 3Hz.

k. BBS shall be compatible with CALTRANS Model 332 Cabinets, Model 170E Controllers, Model 2070 Controllers and cabinet components for full time operation.

l. In cases of low (below 98VAC) or absent utility line power, when the utility line power has been restored at above 105 VAC ± 2 VAC for more than 30 seconds, the BBS shall transfer from battery backed inverter mode back to utility line mode.

m. In cases of high utility line power (above 132VAC), when the utility line power has been restored at below 125VAC ± 2 VAC for more than 30 seconds, the BBS shall transfer from battery backed inverter mode back to utility line mode

n. BBS shall be equipped to prevent a malfunction feedback to the cabinet or from feeding back to the utility service.

o. In the event of inverter/charger failure, battery failure or complete battery discharge, the power transfer relay shall revert to the NC (and de-energized) state, where utility line power is connected to the cabinet.

p. Recharge time for the battery, from "protective low-cutoff" to 80% or more of full battery charge capacity, shall not exceed twenty (20) hours.

2. Mounting/Configuration

NOTE: All references made to EIA rail or EIA 19" (482.6mm) rack shall conform to Electronic Industries Standards EIA-310-B, Racks, Panels, and Associated Equipment, with 10-32 "Universal Spacing" threaded holes.

a. General

1) Inverter/Charger Unit shall be shelf-mounted or rack-mounted on a standard EIA 19" rack. If the inverter/charger is mounted inside the 332 Cabinet (Configuration 1), a shelf shall be provided that supports the weight of the unit.

2) Power Transfer Relay and Manual Bypass Switch shall be mounted on EIA rail.

3) All interconnect wiring shall be provided between Power Transfer Relay, Bypass Switch and Cabinet Terminal Service Block and shall be no less than 3 meters (9'10") of UL Style 1015 CSA TEW with the following characteristics:

- AWG Rating: 6 AWG
- Stranding: 133 strands of 30 AWG tinned copper
- Rating: 600 V, 105 °C, PVC Insulation

4) Relay contact wiring provided for each set of NO/NC relay contact closure terminals shall be a minimum of 3 meters (10 feet) of UL Style 1015 CSA TEW 18 AWG wire, same ratings as above, except 16 strands of 30 AWG tinned copper. Wiring shall be of adequate length for particular installation.

5) Figure 925-7 provides clarification as to how BBS Power Transfer Relay and Manual Bypass Switch are interconnected with Model 332 Cabinets in order to ensure interchangeability between all BBS manufacturers.

Figure 925- 7 BBS Utility Power Connection Diagram

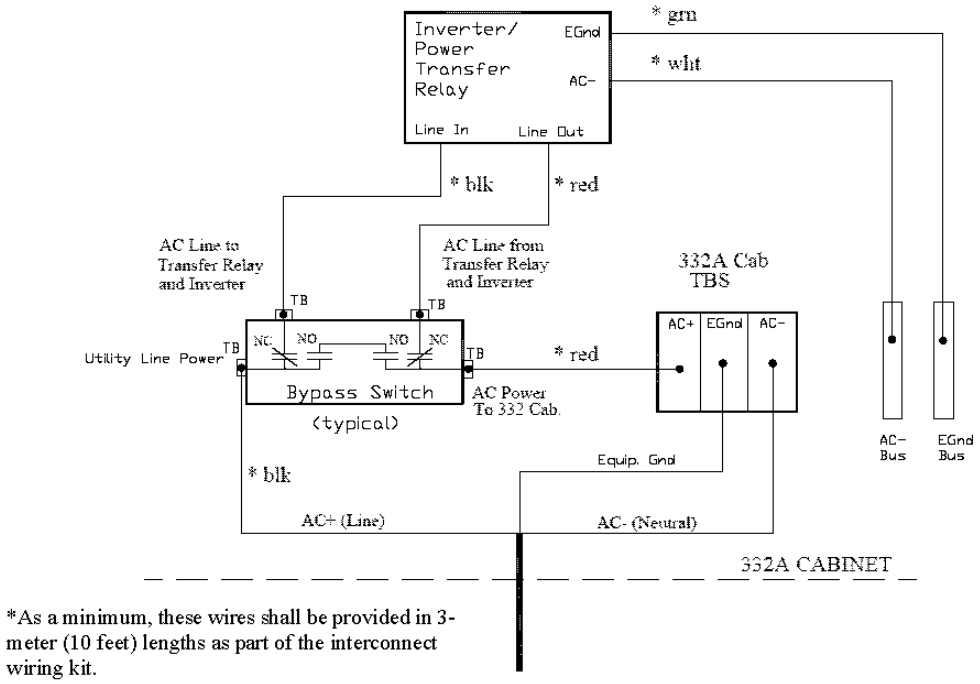

*As a minimum, these wires shall be provided in 3-meter (10 feet) lengths as part of the interconnect wiring kit.

6) All necessary hardware for mounting (shelf angles, rack, etc) shall be included in the bid price of the BBS. All bolts/fasteners and washers shall meet the following requirements:
   - Screw type: Pan Head Phillips machine screw
   - Size and Thread pitch: 10-32
   - Material: 18-8 stainless steel (Type 316 stainless steel is acceptable as an alternate)
   - Washer: Use one flat washer (18-8 stainless steel) under the head of each 10-32 screw (providedthat the screws are properly tightened, lock washers are unnecessary.)
   - Number of screws per hinge bracket: Minimum of six (6) screws per hinge bracket spaced evenly along bracket, with one screw near each end.

7) There shall be two (2) basic BBS mounting options:
   a) Configuration 1 – The BBS (Inverter/Charger, Bypass Switch and Transfer Relay only) installed inside the 332 Cabinet, with the batteries installed in the externally mounted cabinet. See Figure 925-8 for location of inverter in 332 cabinet.
   b) Configuration 2 – The entire BBS, including batteries, installed inside the externally mounted cabinet.

Figure 925-8 BBS Mounting Diagram

For a typical Model 332A Cabinet

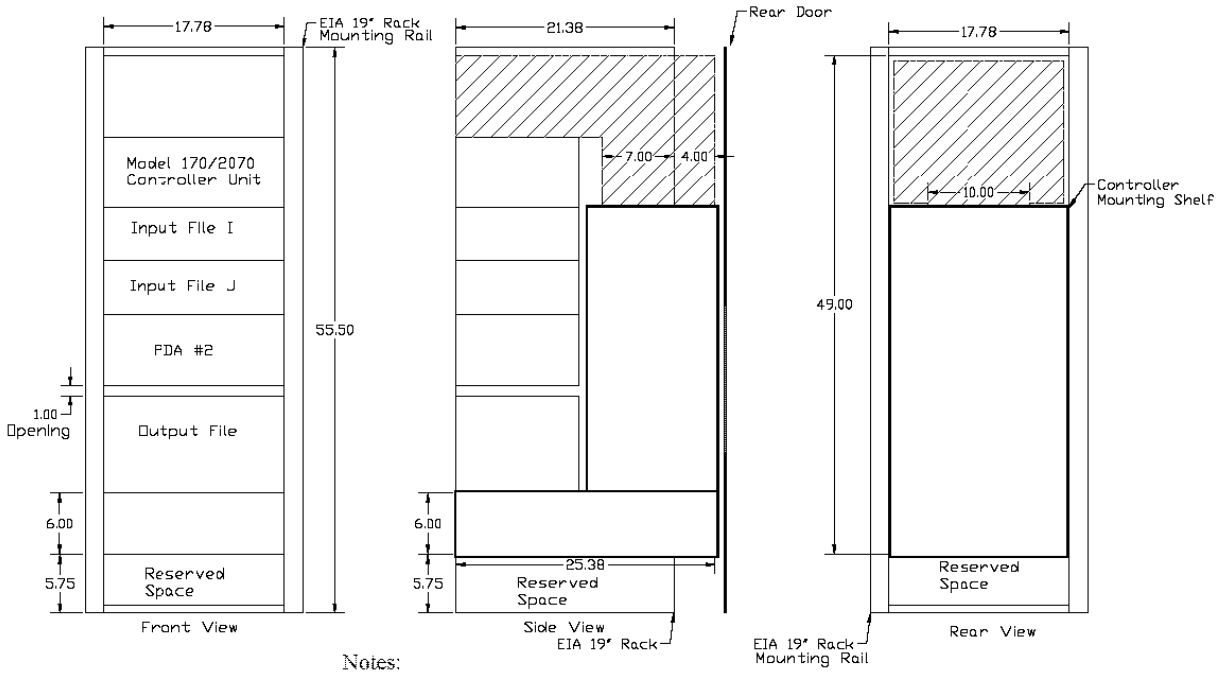

Notes:
Area inside of dashed lines represents available mounting locations for BBS.
Prescribed available mounting areas are approximate.
All dimensions shown are in inches.

8) External Cabinet
   a) The External Cabinet shall be used for housing batteries and/or BBS, which includes inverter/charger unit, power transfer relay, manually operated bypass switch, any other control panels, and all wiring and harnesses.
   b) The same Inverter/Charger, Power Transfer Relay and manually operated Bypass Switch that fits inside a typical fully equipped CALTRANS Model 332 Cabinet shall also be able to fit inside the externally mounted cabinet.

c) The External Cabinet shall be a NEMA 3R rated cabinet conforming to TEES, August 16, 2002 Chapter 7, Section 2-Housings for the construction and finish of the cabinet. The specific finish of the external cabinet shall match the finish of the 332 cabinet. Anti-Graffiti paint shall not be used. Two separate mounting installations shall be used. Refer to the project plans for the appropriate mounting installation.

- Mounting Installation Type A shall be typically used for installing at locations with existing 332 cabinet. This cabinet mounting installation shall attach the external cabinet to the side of the 332 cabinet in the relationship as shown in figure 925-9. Type A mounting installation shall use fasteners that meet the following requirements:
  - (Total of 8 bolts per cabinet with 2 flat washers per bolt and 1 K-lock nut per bolt)
  - Cabinet mounting bolts shall be:
  - 18-8 Stainless Steel Hex Head (Fully Threaded)
  - 3/8" – 16 X 1"
  - Washers shall be:
  - Designed for 3/8" bolt
  - 18-8 Stainless Steel 1" OD round flat type
  - K-lock washer shall be:
  - 18-8 Stainless Steel, Hex Nut Assembled with Free-Spinning Tooth Washer
  - 3/8" – 16 Screw size

  External Cabinet to 332 Cabinet couplings shall provide a conduit for power connections between the 332 Cabinet and External Cabinet. The couplings shall consist of three parts and meet the following requirements:
  - 2" Nylon Insulated, Steel Chase Nipple
  - 2" Sealing, Steel Locknut
  - 2" Nylon Insulated, Steel Bushing

  The external cabinet shall come provided with all bolts, washers, nuts and cabinet-cabinet coupler fittings provided, necessary for mounting the external cabinet to the 332 Cabinet.
- Mounting Installation Type B shall be typically used for locations where a new traffic controller cabinet and foundation are being installed. This cabinet installation shall provide the external battery cabinet as a base mount cabinet on the same foundation as the 332 cabinet. Connections between the cabinets shall be through conduit in the cabinet base. The external cabinet shall be installed in the same relationship as shown in Figure 925-9 to the 332 cabinet. The external cabinet shall be installed so that it is centered on the 30 inch left side of the 332 cabinet. Bolt BBS cabinet to pre-fab base. BBS cabinet opening shall be larger than the pre-fab base opening.

d) The specific dimensions and details of the external battery cabinet shall be as shown in Figures 925–10 through 925–12.

Figure 925-9 External BBS Cabinet Details

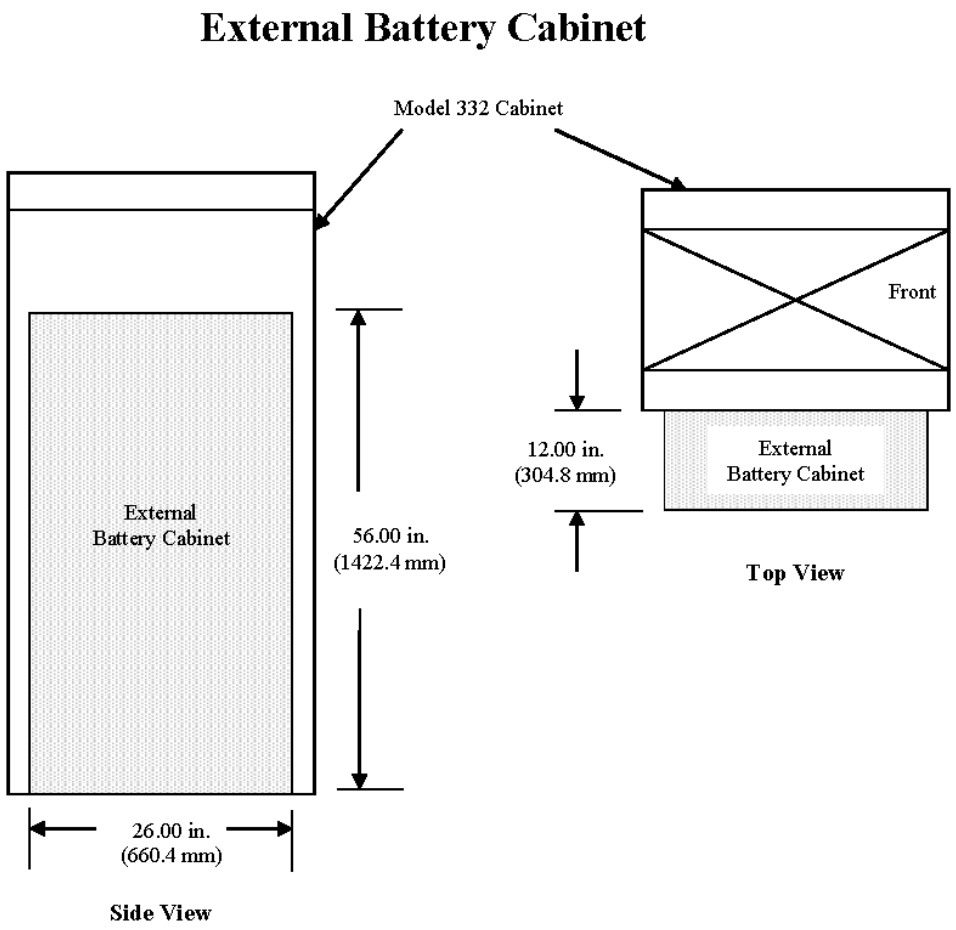

Figure 925-10 External BBS Cabinet Details

e) Four shelves shall be provided. There shall be a minimum of 304.8mm (12") clearance between shelves. Each shelf shall be a minimum of 263.65mm (10.38") X 635.0mm (25"), and capable of supporting a minimum of 57kg (125 lbs.). Shelf edges shall be turned down on all four sides for support and to provide a flat top surface. Shelves shall be predrilled with EIA rail mounting holes. Shelves shall provide a vertical "passageway" for wring in the rear of the cabinet on both the left and right.

f) The bottom shelf shall be capable of being removed.

Figure 925-11 EIA Rail for Mounting Inverter or PTR inside External BBS Cabinet

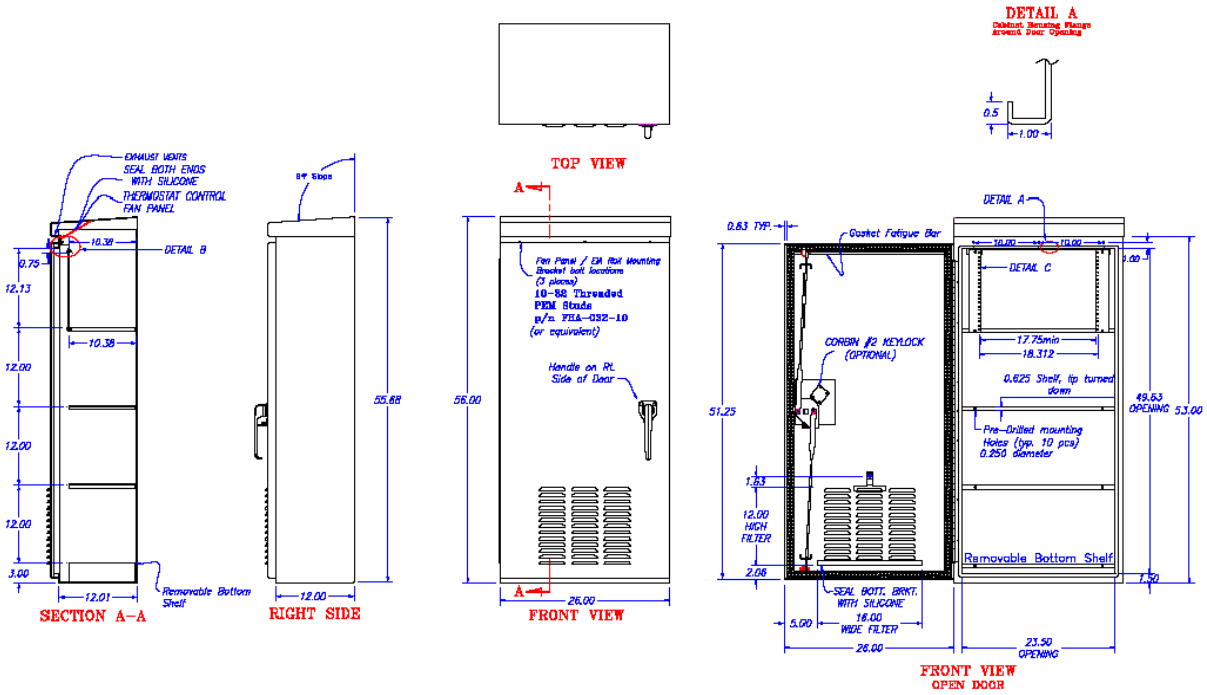

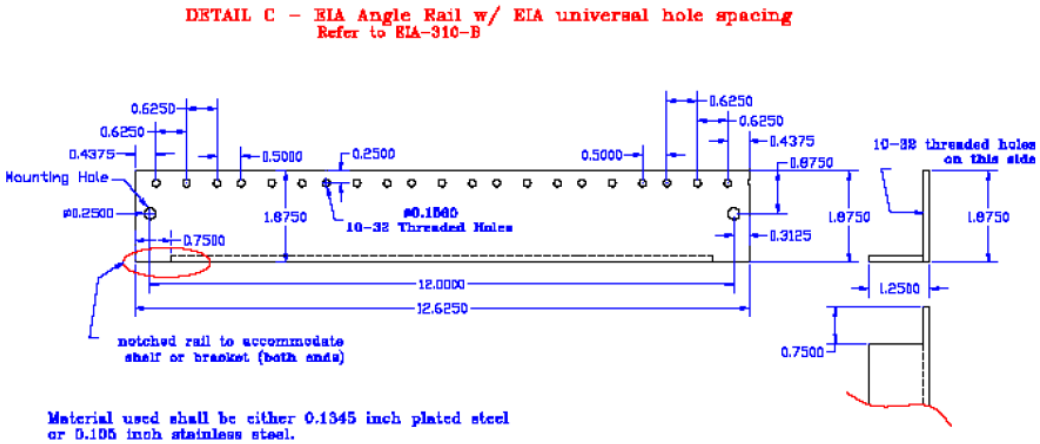

g) The External cabinet shall be ventilated through the use of louvered vents, filter, and one thermostatically controlled fan as per TEES Chapter 7 Section 2-Housings. The thermostat shall be accessible without removing the BBS controller.

h) External cabinet fan shall be AC operated from the same line output of the Manual Bypass Switch that supplies power to the 332 Cabinet. A 2-position terminal block shall be provided on the fan panel, along with 3 meters (10 feet) of connected hookup wire.

i) The door shall be attached to the cabinet through the use of either a continuous stainless steel piano hinge or four, two-bolts per leaf, hinges as per TEES Chapter 7 Section 2. The door shall use a padlock clasp or latch and lock mechanisms as described in the TEES, in order to lock the door.

j) Two EIA angle rails, per Detail C, Figure 925–11, along with all necessary mounting hardware (4 sets of 10-32 bolts and nuts with captive washers) shall be provided with the external cabinet (not installed). Rails shall be symmetric to allow for installation on either right or left sides of the cabinet. Mounting holes and bracket shall allow for EIA rail installation at any location in the external cabinet. The EIA mounting angle nominal thickness shall be either 0.1345 inch (3.4163mm) plated steel or 0.105 inch (2.667mm) stainless steel.

k) EIA rail mounting bracket shall be of continuous, one-piece design bolted into the cabinet to provide adequate support for rail-mounted equipment. See Figure 925–12.

l) Pressed in, flush-head threaded screw posts shall be inserted into the front face of the cabinet enclosure top sill. These threaded posts shall be used to mount both the fan panel and the EIA rail-mounting bracket. The screw posts shall be #10-32 thread size stud 0.625 inches in length. Refer to Figure 925–10, front views for mounting detail.

Figure 925–12 EIA Rail Mounting Bracket for Mounting EIA Rails inside External BBS Cabinet

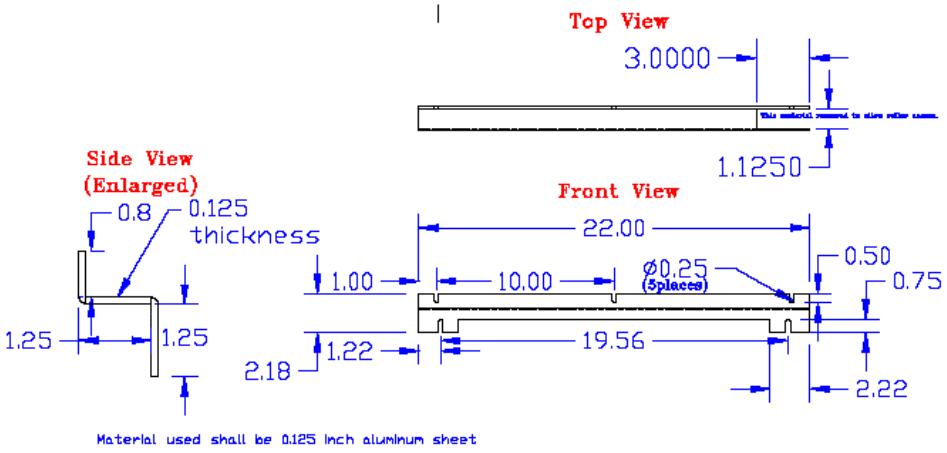

3. Maintenance, Displays, controls and Diagnostics

a. The BBS shall include a display and /or meter to indicate current battery charge status and conditions.

1) The BBS shall provide voltmeter standard probe input-jacks (+) and (-) to read the exact batteryvoltage drop at the inverter input.

2) The BBS shall include a 0 to 100% battery capacity LED indicator.

b. The BBS shall have lightning surge protection compliant with IEEE/ANSI C.62.41.

c. The BBS shall be equipped with an integral system to prevent battery from destructive discharge and overcharge.

d. The BBS and batteries shall be easily replaced with all needed hardware and shall not require any special tools for installation.

e. The BBS shall include a front-panel event counter display to indicate the number of times the BBS was activated and a front-panel hour meter to display the total number of hours the unit has operated on battery power. Both meters shall be resetable.

f. Manufacturer shall include a set of equipment lists, operation and maintenance manuals, and board-level schematic and wiring diagrams of the BBS, and the battery data sheets. Manual shall conform to TEES August 16, 2002, Chapter 1, Section 1.2.4.2.

g. The BBS shall be equipped to communicate via Ethernet connection.

4. Battery System

a. Individual batteries shall be:

1) Voltage rating: 12V type

2) Group size: 24 maximum

3) Batteries shall be easily replaced and commercially available off the shelf.

b. Batteries used for BBS shall consist of 4 to 8 batteries with a cumulative minimum rated capacity of 240 amp-hours.

c. Batteries shall be deep cycle, sealed prismatic lead-calcium based AGM/VRLA (Absorbed Glass Mat/ Valve Regulated Lead Acid).

d. Batteries shall be certified by the manufacturer to operate over a temperature range of – 25 °C (-13F) to + 71°C (+160 F).

e. The batteries shall be provided with appropriate interconnect wiring and corrosion-resistant mounting trays and/or brackets appropriate for the cabinet into which they will be installed.

f. Batteries shall indicate maximum recharge data and recharging cycles.

g. Battery Harness

1) Battery interconnect wiring shall be via two-part modular harness.

2) Part I shall be equipped with red (+) and black (-) 12 inch (30.48 cm) cabling that can be permanently connected to the positive and negative posts of each battery. Each red and black pair shall be terminated into an Anderson Power Pole Connector or AMP Power Series Connector or equivalent style connector.

3) Part II shall be equipped with the mating Power Pole style connector for the batteries and a single, insulated Power Pole style connection to the inverter/charger unit. Harness shall be fully insulated and constructed to allow batteries to be quickly and easily connected in any order to ensure proper polarity and circuit configuration.

4) Power Pole style connectors may be either one-piece or two-piece. If a two-piece connector is used, a locking pin shall be used to prevent the connectors from separating.

5) The length of the battery interconnect harness (Part II) shall be a minimum of 60 inches (152.4 cm) from the Inverter/Charger plug to the first battery in the string. The lateral length of the harness between battery connectors shall be a minimum of 12 inches (30.48 cm).

6) All battery interconnect harness wiring shall be UL Style 1015 CSA TEW or Welding Style Cable or equivalent, all of proper gauge with respect to design current and with sufficient strand count for flexibility and ease of handling.

7) Battery terminals shall be covered and insulated with molded boots so as to prevent accidental shorting.

B. Fabrication

Refer to Subsection 925.2.04.B.1 for controller cabinet minimum fabrication Specifications.

C. Acceptance

General Provisions 101 through 150.

Each BBS shall be manufactured in accordance with a manufacturer Quality Assurance (QA) program. The QA program shall include two Quality Assurance procedures: (1) Design QA and (2) Production QA. The Production QA shall include statistically controlled routine tests to ensure minimum performance levels of BBS units built to meet this specification and a documented process of how problems are to be resolved. The manufacturer, or an independent testing lab hired by the manufacturer, shall perform Design Qualification Testing on new BBS system(s) offered, and when any major design change has been implemented on an existing design. A major design change is defined as any modification, material, electrical, physical or theoretical, that changes any performance characteristics of the system, or results in a different circuit configuration. Where a dispute arises in determining if a system is a new design or if the system has had a major design change, the State will make the final determination if Design Qualification Testing is required prior to production consideration.

Production Quality Control tests shall be performed on each new system prior to shipment. Failure to meet this requirements shall be cause for rejection. The manufacturer shall retain test results for seven years. Each BBS shall be given a minimum 100-hour burn-in period to eliminate any premature failures. Each system shall be visually inspected for any exterior physical damage or assembly anomalies. Any defects shall be cause for rejection.

D. Materials Warranty

Refer to Subsection 925.2.01.D for Materials Warranties. Manufacturers shall provide a two (2) year factory-repair warranty for parts and labor on the BBS from date of acceptance by the Department. Batteries shall be warranted for full replacement for the first year and 50% discount off the original purchase price for the second year from date of purchase. The warranty shall be included in the total bid price of the BBS.

925.2.7 Flashing Beacon Assembly

A. Requirements

This specification is for a flashing signal cabinet, which consists of an aluminum cabinet containing a flasher assembly, Field connection terminal block, surge arrestor and circuit breaker wired in a manner to operate flashing beacons. Refer to Figure 925-13.

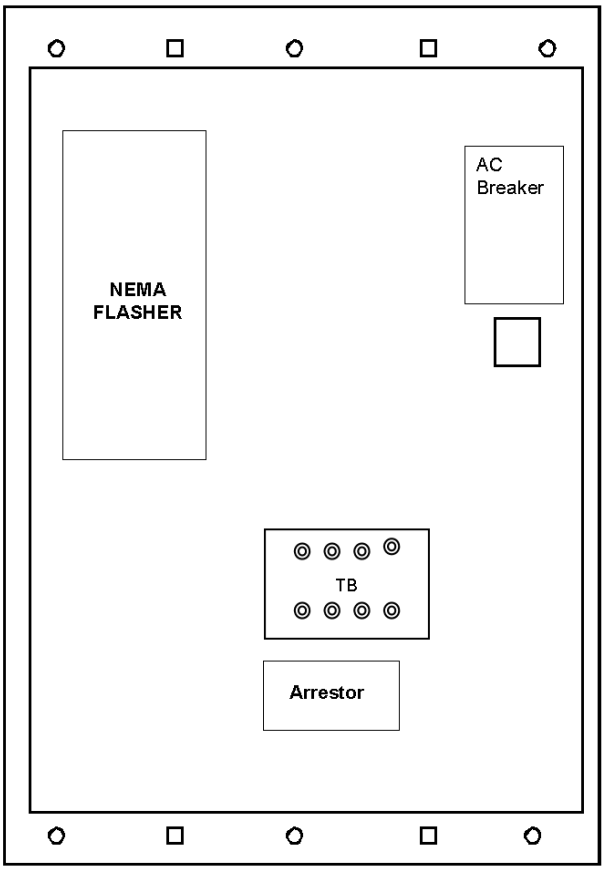

Note: Front view of cabinet Door Assembly not shown
No scale

Figure 925-13—Typical Flashing Signal Cabinet Layout

1. Cabinet Dimensions

   Supply a NEMA Type 3R cabinet assembly with the following exterior dimensions:

	Minimum	Maximum
Height	14 inches (350 mm)	18 inches (450 mm)
Width	10 inches (250 mm)	14 inches (350 mm)
Depth	7 inches (175 mm)	10 inches (250 mm)

2. Flasher Unit

   Supply a standard plug in two circuits NEMA flasher.

   Ensure that the flasher is of all solid state construction, meets the requirements of the NEMA Standards and is rated at a minimum of 10 A per circuit.

   Ensure that the flasher utilizes zero voltage turn-on and turn-off current and is capable of dimming outputs.

3. Surge Arrestor

Supply a flasher cabinet that incorporates an AC surge arrestor to protect the internal components from lighting and over voltages on the AC service input.

The requirements for the surge arrestor are:

Two Stage Arrestor	
Peak Surge Current	20000 A
Peak Surge Voltage @ 20KA	280 V
Clamp Voltage	280 V @ 20 kA
Continuous AC Voltage	120 V AC RMS
Response Time	<5 nsec
Operating Temp.	-40 ºF to 185 ºF (-40 ºC to 85 ºC)

4. Circuit Breaker

   Include a 15 A circuit breaker in the cabinet. The circuit breaker shall have the following characteristics.

   - Thermal Magnetic 1 pole 120/240 VAC at 50/60 Hz 15 A
   - Interrupting Rating of 10KA at 48 VDC
   - Wire Size 14 to 2 AWG
   - 35 MM Din Rail mounting

5. Terminal Block

   Include a four position terminal block in the cabinet for making field connections. Properly label all field terminal connections.

6. Construction

   Assemble the flasher assembly, terminal block, surge arrestor and circuit breaker in the cabinet as shown on the attached drawing.

   Wire all components together as a working unit, thus requiring only field connections to and from the AC power and flashing beacons.

B. Fabrication

Refer to Subsection 925.2.04.B.1 for controller cabinet minimum fabrication specifications.

C. Acceptance

General Provisions 101 through 150.

D. Materials Warranty

Refer to Subsection 925.2.01.D for Materials Warranties.

925.2.8 Flashing Signal Cabinet With Time Clock

A. Requirements

This specification is for a flashing signal cabinet with time clock which consists of an aluminum cabinet containing a flasher assembly, time clock, field connection terminal block, surge arrestor and circuit breaker wired in a manner to operate school flashing beacons. Refer to Figure 925-14.

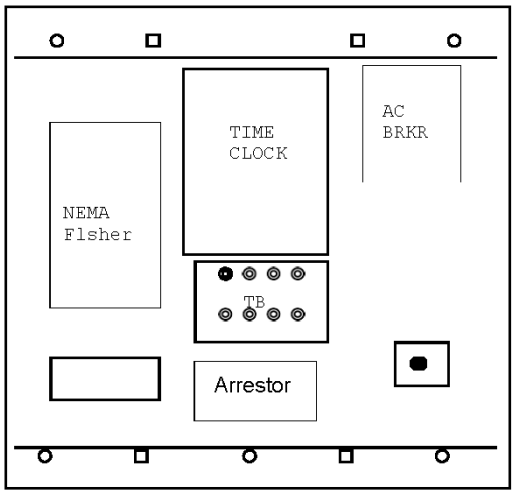

Note: Front view of cabinet Door Assembly not shown

No scale

Figure 925-14—Typical Flashing Cabinet with Time Clock Cabinet Layout

1. Cabinet Dimensions

   Supply a NEMA Type 3R cabinet assembly with the following exterior dimensions:

	Minimum	Maximum
Height	14 inches (350 mm)	18 inches (450 mm)
Width	10 inches (250 mm)	14 inches (350 mm)
Depth	7 inches (175 mm)	10 inches (250 mm)

2. Flasher Unit

   Supply a standard plug in, two circuits NEMA flasher.

   Ensure that the flasher is of all solid state construction, meets the requirements of the NEMA Standards and is rated at a minimum of 10 A per circuit.

   Ensure that the flasher utilizes zero voltage turn-on and turn-off current and be capable of dimming outputs.

3. Time Switch

   Supply a time switch that meets the requirements of Subsection 925.2.09 of this specification.

4. Surge Arrestor

   Supply flasher cabinets that incorporate an AC surge arrestor to protect the internal components from lighting and over voltages on the AC service input.

   The requirements of the surge arrestor are as follows:

Two Stage Arrestor	
Peak Surge Current	20000 A
Peak Surge Voltage @ 20KA	280 V
Clamp Voltage	280 V @ 20 kA
Continuous AC Voltage	120 V AC RMS
Response Time	<5 nsec
Operating Temp.	-40 ºF to 185 ºF (-40 ºC to 85 ºC)

5. Circuit Breaker

   Include a 15 A circuit breaker in each cabinet. The circuit breaker shall have the following characteristics.

   - Thermal Magnetic 1 pole 120/240 VAC at 50/60 Hz 15 A

- Interrupting Rating of 10KA at 48 VDC
- Wire Size 14 to 2 AWG
- 35 MM Din Rail mounting

6. Terminal Block

   Include a four position terminal block in each cabinet for making field connections. Properly label all field terminal connections.

7. Construction

   Assemble the flasher assembly, terminal block, surge arrestor and circuit breaker in the cabinet as shown on the attached drawing.

   Wire all components together as a working unit, thus requiring only field connections of the AC power and flashing beacons.

B. Fabrication

Refer to Subsection 925.2.04.B.1 for controller cabinet minimum fabrication Specifications.

C. Acceptance

General Provisions 101 through 150.

D. Materials Warranty

Refer to Subsection 925.2.01.D for Materials Warranties.

925.2.9 Time Clock

A. Requirements

Supply time clocks that are single circuit, calendar programmable, solid state, fully self-contained units (RTC AP 22 or Eltec TC18 or equivalent) that meet the following Specifications:

1. Alphanumeric liquid crystal display.
2. Automatic daylight savings time and leap year compensation. Changes in the daylight savings time program made through the keypad do not require hardware modification.
3. Minimum twenty-four (24) hour capacitive back up. Battery back up is not acceptable.
4. Keypad entry programming without the use of any external devices such as a PC, external programming unit, another time switch, etc.
5. Operate on 95 to 135 V AC, 60 Hz line current.
6. SPDT relay output rated at 15 A.
7. Maximum size of 4.75 inches (121 mm) wide, 10.375 inches (2636 mm) high and 2 inches (50 mm) deep.
8. A programming manual is to be included with each unit.
9. Ability to do program transfer from unit to unit. Include program transfer cable with unit.
10. Ability to run minimum six (6) different day plans and minimum twenty five (25) different annual exception plans.Temperature range of -30° F (-34° C) + 165° F (74° C).

B. Fabrication

General Provisions 101 through 150.

C. Acceptance

General Provisions 101 through 150.

D. Materials Warranty

Refer to Subsection 925.2.01.D for Materials Warranties.

925.2.10 Self Tuning Loop Detector

A. Requirements

This specification sets forth the minimum acceptable design, operational and functional performance requirements for multi-channel, inductive loop vehicle detection systems.

1. General Requirements
   a. Mounting

      Ensure that the unit is configured for rack mount insertion into a NEMA (TS l or TS 2) card rack and/or CALTRANS Type 2070 cabinet input file.

   b. Environmental

      Ensure that the unit is in full compliance with the environmental tests, transient tests and size requirements of NEMA standard TS-l Section 15, TS-2 Section 6.5 and the California Type 2070 Specifications.

      Provide documentation from an independent laboratory, which certifies that the unit is in compliance with the above Specifications.

   c. LED Indicator

      Ensure that each channel includes two high visibility LED indicators; one for the detect state and the second to indicate the status of the fault monitor.

2. Operational Requirements
   a. Tuning

      Supply units that are fully digital and self-tuning.

      Ensure that each channel of the unit can automatically tune to any loop and lead in combination within two (2) seconds of application of power or when a reset signal is received.

      Ensure that the tuning circuit is designed so that drift, caused by environmental changes or changes in applied power, does not cause false actuations.

   b. Scanning

      Supply units that sequentially scan each channel (only one channel energized at any given time) to eliminate crosstalk from multiple loops in adjacent lanes and/or allow overlapped loops for directional control and/or allow use of multi-conductor homerun cable when connected to the same detector unit.

   c. Sensitivity Setting

      Ensure that each channel is equipped with front panel selectable sensitivity settings in presence and pulse modes.

   d. Frequency

      Supply units that have a minimum of three switch selectable operating frequencies.

   e. Inductance Range

      Ensure that each channel can tune to an inductive load from 50 to 2000 microhenries with a Q factor > 5.

   f. Grounded Loops

      Ensure that each channel can continue to operate with poor quality loop systems (Q>2) including those that have a single point short to ground.

   g. Fault Monitoring

      Supply units that constantly monitor the operation of each channel.

      Ensure that the unit detects shorted loops, open circuit loops or sudden changes in inductance (>25% of nominal).

      Ensure that each type of fault is indicated on a fault LED by a unique sequence of flashes until the fault is rectified.

      Ensure that while the channel is in the fault condition, the channel output remains in the detect state.

      When the fault is rectified, the fault LED continues to emit the sequence signifying the last fault detected, but the detect LED and output returns to normal operation.

   h. Failsafe Output

      Ensure that each channel output generates a continuous solid state output to the controller when power to the detector is removed.

   i. Operational Modes

      Supply units with each channel selectable for either pulse or presence modes and that meet the following requirements:

      - Pulse Mode
      - This setting provides a single output pulse (125 ms +/- 25) in response to a vehicle entering the loop.

- If a vehicle remains in the sensing zone in excess of two (2) seconds, the unit "tunes out" said vehicle.
- The channel is then capable of detecting another vehicle entering the same detection zone.
- Presence Mode
- The presence hold time is a minimum of four (4) minutes for small vehicles (motorcycles) and a minimum of sixty (60) minutes for automobiles.
- Ensure that the unit tunes out of continuous peak hour traffic over long or multiple small loops as long as there is vehicle motion in the sensing zone every ten (10) minutes.

j. Resets

Ensure that the channels are manually resettable by removing the power momentarily.

Ensure that the channels reset remotely when the voltage on Pin C falls below 8 V DC for a period > l5µs, and that the unit resumes normal operation within four (4) seconds after the application of power or after a reset signal of l5µs.

k. Field Tuning

Ensure that field adjustments to the operation of the detector do not require the use of a meter, circuit changes, special software or any substitutions, modifications or additions to the unit.

3. Performance Requirements

If testing should be required, provide the Department with a test unit and/or software within ten (10) calendar days of the request.

Should the unit fail to meet the design and/or performance requirements of this specification, the unit will be rejected.

Ensure that the units meet the following requirements:

a. Capable of detecting passage, holding presence and accurately counting all types of licensed motor vehicles when connected in various loop configurations and lead-in combinations without detecting vehicles in adjacent lanes.

- Typical Loop Configurations with Lead-in of 5 feet (1.5 m) to 1,500 feet (1000 m) are:
- 6 feet x 6 feet (1.8 m x 1.8 m)
- 6 feet x 20 feet (1.8 m x 6 m)
- 6 feet x 40 feet [(1.8 m x 12 m) standard or quadrupole]

b. Capable of responding to an inductance change of 0.02% and sense vehicles at speeds of up to 80 mph (130 km/h).

c. Not detect vehicles, moving or stopped, at distances greater than three feet for any loop perimeter.

d. Detect all vehicles over multiple turn and/or multiple loops that may he connected in series, parallel or series/parallel with homerun lengths from <5 feet (1.5 m) to > 1,500 feet (1,000 m).

4. Optional Features

In addition to the requirements listed in the previous sections, the units may be requested with any combination of the following optional features:

a. Option 1- Timing Features - Delay & Extension

When this option is specified, ensure that the unit incorporates the following features:

1) Delay Timing

Minimum selectable delay time of 1 to 30 seconds in minimum 1-second increments for each channel.

2) Extension Timing

Minimum selectable extension time of 0.5 to 10 seconds in minimum 0.5-second increments for each channel.

b. Option 2 - Advanced Features

When the option for advanced features is specified, supply units that incorporate the following advanced features:

1) Serial Port Interface

When the serial port interface is specified, equip the detector with a front and rear panel RS 232 port for the transmission of data. Provide Windows 95 compatible software for interfacing with the detector.

2) PC Interface

Ensure that PC software, when connected directly to the unit through the front panel RS 232 port, provides a screen to display the following loop system operating characteristics, on a per channel basis, for system setup, data collection and diagnostics.

- Loop Status
- Loop Inductance (μH)
- Loop Frequency (kHz)
- Inductance Change (nH)
- Last Fault: Open, Shorted, >25% L
- Fault Occurrence: Date & Time
- Vehicle Count

3) Speed, Volume & Occupancy

The software, when connected directly to the unit, is capable of collecting and storing speed, volume and occupancy data from each detector channel.

The software allows assignment of loop-to-loop distances to enable accurate speed and vehicle length measurements.

The speed volume and occupancy information is uploaded and stored in the vendor-supplied software.

Upon request, supply the necessary information/protocols to allow the Department to write custom software to retrieve speed, volume and occupancy data.

B. Fabrication

General Provisions 101 through 150.

C. Acceptance

General Provisions 101 through 150.

D. Materials Warranty

Refer to Subsection 925.2.01.D for Materials Warranties.

925.2.11 Loop Sealant

A. Requirements

Furnish and install loop sealant according to Subsection 833.2.09, "Polyurethane Sealant for Inductive Loops". For a list of sources, see QPL 75.

B. Fabrication

General Provisions 101 through 150.

C. Acceptance

General Provisions 101 through 150.

D. Materials Warranty

Refer to Subsection 925.2.01.D for Materials Warranties.

925.2.12 Vehicle Signal Heads

A. Requirements

Supply vehicle signal heads that are 12 inches (300 mm) in diameter for traffic signal control applications. For ramp metering systems supply both 12 inches (300 mm) and 8 inches (200 mm) as per the Plans.

Ensure that the 8 inch (200mm) or 12 inch (300 mm) polycarbonate vehicle signal heads meet the current ITE specification on Vehicle Traffic Control Signal Heads with the following modifications and / or clarifications:

1. Unless otherwise approved by the Engineer or as noted on the Plans, supply signal heads with the following exterior color scheme:

- Signal Housing - Highway Yellow.
- Front Face including Doors and Visors: Flat Black

2. Provide housing and housing door that are one piece injection molded ultraviolet and heat stabilized polycarbonate resin with the color impregnated in the material.
3. Terminate the wiring from each signal section in the top section of the head assembly. Ensure that the cable jacket is a minimum of 6 inches inside the signal head assembly.
4. Provide the appropriate Vehicle Signal LED Signal in each section either Circular or Arrow Module.
5. Provide an effective seal with the LED module to make the assembly weather tight.
6. Mount one aluminum reinforcing support plate in the top of the red section of each three and four section signal head for the installation of mounting hardware.
7. All five section heads or heads equipped with 2-way mounting hardware shall have aluminum mounting support plates installed in the top and bottom of the red section/sections for mounting hardware.
8. Install a support plate between each section of all signal heads. Place these plates such that there is a plate in the bottom of and/or top of any sections where sections adjoin to another section.
9. Provide Signal Heads that use stainless steel hardware and are weather tight. Ensure signal heads that are supplied are sealed for mounting in all possible configurations.
10. Provide Signal Heads that have housing door that "positively" latches using two eyebolts and wing nuts. Ensure the Signal door has hinge lugs molded on one side and two latch jaws are molded on the other side.
11. Provide signal heads that provide a positive method of holding the lens such that the lens does not rotate. Ensure the lens is weather tight. Lens clips which do not apply firm pressure to the lens gasket to avoid rotation are not acceptable. When constructing side by side signal sections ensure that both doors can open at the same time (butterfly). When doors are open ensure that the door will remain attached to housing. Ensure bottom section has drainage holes.

B. Fabrication

Refer to ITE Standards for material composition and finish Specifications.

C. Acceptance

Refer to ITE Standards for material composition, finish Specifications, and wind loading requirements.

D. Materials Warranty

Refer to Subsection 925.2.01.D for Materials Warranties.

925.2.13 Pedestrian Signal Head

A. Requirements

Provide each section with a visor encompassing the top and sides of the signal face of a size and shape adequate to shield the lens from external lighted sources.

An acceptable option is a "Z-crate" or louver type visor for mounting over the Pedestrian signal face.

Construct the housing of one piece cast aluminum alloy with two integrally hinge lugs, screw slots and openings at each end. Construct the door of one piece cast aluminum alloy with two hinge lugs cast on top of the door and two latch points cast on the bottom. Provide hinge pins of stainless steel to attach the door to the housing and two eye bolts and wing nuts on the other side of the door.

Ensure that the door is provided with a neoprene gasket capable of making a weather resistant, dustproof seal when closed. Supply Pedestrian signal heads with a black face and a yellow body, unless otherwise specified on the Plans.

Ensure that Pedestrian indications are distinguishable to the Pedestrian both day and night and at all distances from 10 feet (3 m) to the full width of the areas to be crossed.

Use symbols that are 12 inches (300 mm) high. Use only internal illumination.

Ensure that when illuminated, the "HAND" symbol is Portland Orange and the "PERSON" symbol is Lunar White, meeting the ITE Standards. Ensure that an opaque material obscures all areas of the face or lens, except for the message. Ensure that when not illuminated, the symbols are not to be distinguishable by Pedestrians at the far end of the crosswalk they control.

B. Fabrication

General Provisions 101 through 150.

C. Acceptance

General Provisions 101 through 150.

D. Materials Warranty

Refer to Subsection 925.2.01.D for Materials Warranties.

925.2.14 Optically Programmed Signal Head

A. Requirements

Supply signal heads that permit the visibility zone of the indication to be determined optically and require no hoods or louvers.

The projected indication may be selectively visible or veiled anywhere within 15 degrees of the optical axis.

Ensure that no indication results from external illumination and that one light unit does not illuminate a second. The components of the optical system include the lamp, lamp collar, optical limiter-diffuser, and objective lens.

Ensure that the optical system accommodates projection of diverse, selected indications to separate portions of the roadway such that only one indication will be simultaneously apparent to any viewer.

Ensure that the projected indication conforms to ITE transmittance and chromaticity Standards.

1. Construction
   a. Provide an LED Lamp Module that is a direct replacement for the incandescent lamp. Ensure the Lamp modules are on the latest CALTRANS QPL for LED Programmed Visibility Modules. Ensure the unit provided operates over the voltage range of 80 to 135 VAC and the temperature range of -40 C (-40 F) to 74 C (165 F). Provide modules that conform to the applicable portions of section 925.2.15. Ensure the unit provides a minimum luminous intensity of 500 candela and does not exceed 18 watts at 25 C (77 F).

      Couple the lamp to the diffusing element with a collar including a specular inner surface. The diffusing element may be discrete or integral with the convex surface of the optical limiter.

   b. Supply an optical limiter with an accessible imaging surface at focus on the optical axis for objects 900 to 1,200 feet (270 to 360 m) distance and permit an effective veiling mask to be variously applied as determined by the desired visibility zone.

      Ensure that the optical limiter is provided with positive indexing means and is composed of heat-resistant glass.

   c. Ensure that the objective lens is a high-resolution planar incremental lens hermetically sealed within a flat laminate of weather resistant acrylic or approved equal.

      Supply a lens that is symmetrical in outline and that may be rotated to any 90-degree orientation about the optical axis without displacing the primary image.

2. Mounting
   a. Supply signals that mount to standard 1.5 inch (38 mm) fittings as a single section, as a multiple section face, or in combination with other signals.

      Provide signal sections with an adjustable connection that permits incremental tilting from 0 to 10 degrees above or below the horizontal while maintaining a common vertical axis through couplers and mounting.

      Ensure that terminal connections permit external adjustment about the mounting axis in 5-degree increments.

   b. Ensure that the signal is mountable with ordinary tools and capable of being serviced with no tools.

      Supply attachments such as back plates or adapters that conform and readily fasten to existing mounting surfaces without affecting water and light integrity of the signal. Supply heads with tri-studs for mounting.

3. Electrical

   Supply lamp fixtures that comprise a separately accessible housing and integral lamp support indexed ceramic socket and self-aligning, quick release lamp retainer.

   Ensure that electrical connection between case and lamp housing can be accomplished with an interlock assembly, which disconnects lamp holder when opened. Include a covered terminal block for clip or screw attachment of lead wires for each signal section.

Use concealed No. 18 AWG, stranded and coded wires to interconnect all sections to permit field connection within any section.

4. Photo Controls

   Ensure that each signal includes integral means for regulating its intensity between limits as a function of the individual background illumination.

   Ensure that lamp intensity is not less than 97% of uncontrolled intensity at 10 750 lux, and reduces to 15 + 2% of maximum at less than 10.75 lux.

   Ensure that response is proportional and essentially instantaneous to any detectable increase of illumination from darkness to 10 750 lux, and damped for any decrease from 10 750 lux.

   Ensure that the intensity controller is comprised of an integrated, directional light sensing and regulating device interposed between lamp and line wires.

   Ensure that it is compatible with 60 Hz input and responsive within the range 105 to 135 V AC.

   Output may be phase controlled, but ensure that the device provides nominal terminal impedance of 1,200 Ωopen circuit and a corresponding holding current.

B. Fabrication

General Provisions 101 through 150.

C. Acceptance

General Provisions 101 through 150.

D. Materials Warranty

Refer to Subsection 925.2.01.D for Materials Warranties.

925.2.15 LED Signal Modules

A. Requirements

This specification covers Type 1 Light Emitting Diode (LED) red, green and yellow modules for vehicle signals for both Circular and Arrow indications. It also covers LED Pedestrian "HAND & PERSON" signal modules.

1. General Requirements All Modules

   Ensure that Type 1 LED signal module include a LED circuit board with LEDs and required circuit components, 36 inch (900 mm) 16 AWG wire leads with strain relief and spade terminals, a rigid housing, and a one piece neoprene gasket.

   Supply Type 1 LED signal modules that are watertight when mounted in the traffic signal housing.

   Submit life data on the LEDs from the LED Signal Module manufacturer to calculate the expected useful life.

   Supply modules with permanent markings of date of manufacture and date of installation.

   Ensure that the Type 1 LED signal modules utilize the same mounting hardware that is used to secure the incandescent lens and gasket assembly.

2. Optical All Modules

   Provide test data from an independent laboratory to verify that the performance of the product meets current ITE requirements.

   Ensure that the individual LEDs are wired such that a catastrophic failure of one LED will result in the loss of not more than 5% of the signal module light output.

   The failure of a single LED in a string or cluster of LED's causes loss of light from only that LED, not the entire string or indication.

   Provide control circuitry that prevents the current flow through the LEDs in the "off" state to avoid any false indications as may be perceived by the human eye during daytime and nighttime hours.

   Ensure that the LED signal module is operationally compatible with existing or new supplied conflict monitors (NEMA TS-1, NEMA TS-2, Model 210, Model 2010, ITS Cabinet CMU and AMU)..

   Ensure that the LED Signal Module is operationally compatible with existing or new supplied load switches.

3. Electrical All Modules

   Supply LED signal modules that operate over the temperature range of –40 ºF to 165 ºF (-40 °C to 74 ºC).

Ensure that the power factor is 90% or greater, at nominal rated voltage, at 77 ºF (25 °C), after 60 minutes of operation. Provide modules that do not exceed the maximum power consumption as shown in Table 925-18.

Table 925-18 Maximum Power Consumption (in Watts) at 25 C (77 F) & 74 C (165 F)						
Vehicle Indications	**Red**		**Yellow**		**Green**	
Temperature	**25 C**	**74 C**	**25 C**	**74 C**	**25 C**	**74 C**
12 Inch (300 mm) Circular	11	17	22	25	15	15
8 Inch (200 mm) Circular	8	13	13	16	12	12
12 Inch (300 mm) Arrow	9	12	10	12	11	11
Pedestrian Indications	**Hand**				**Man**	
Temperature	**25 C**	**74 C**	**25 C**	**74 C**	**25 C**	**74 C**
12 Inch (300 mm)	10	12			9	12

Ensure that the total harmonic distortion (THD) is less than 20% at rated voltage, at 77 ºF (25 °C) and that all LED traffic signal modules are in compliance with FCC noise regulations.

Ensure that the LED signal modules operate on line voltage, 120 V AC nominal, and are able to operate over the voltage range of 80 V AC to 135 V AC. Power Supply must be integral to the module.

Provide transient voltage suppression rated at 1,500 W for 1 millisecond and fusing with a maximum rating of 2 A to minimize the effect and repair cost of an extreme over voltage situation or other failure mode.

Ensure the lens of the modules that are polymeric and are not frosted have a surface coating to provide front surface abrasion resistance. Ensure the Red and Yellow section module lens are tinted to correspond with the wavelength (chromaticity) of the LED. Ensure Green Section modules are clear.

Ensure the modules allow a reduction of the intensity of the light output in response to an input from the traffic signal controller. Ensure the minimum light output when dimmed is not less than 30% of the minimum maintained luminous intensity as defined in the applicable Signal Head Module.

4. Circular Signal Modules

Supply LED Circular Signal Modules that fit in standard incandescent vehicle traffic signal housings and meet the Performance Specification of the ITE Vehicle Traffic Control Signal Heads: LED Circular Signal Supplement. In case of conflict, this specification shall govern. Before delivery of any modules supply certification that module is to be in compliance with these specifications. In addition substantiating documentation must be supplied from an independent test laboratory to show the product has passed design qualification testing in accordance with section 6.4 of the ITE Vehicle Traffic Control Signal Heads: LED Circular Signal Supplement. Ensure the report includes a Minimum Maintained Luminous Intensity chart for the module being provided that uses the same horizontal and vertical angles as shown in Table 1 of the ITE Vehicle Traffic Control Signal Heads: LED Circular Signal Supplement. Ensure all modules are provided with a signed copy of the production and test and inspection as detailed in section 6.3 of the ITE Vehicle Traffic Control Signal Heads: LED Circular Signal Supplement.

Supply lenses for that are made of ultraviolet stabilized polycarbonate. Ensure that the external lens surface is smooth, with no raised features, to, minimize the collection of dirt, diesel smoke, and other particulate contaminates, and to facilitate periodic cleaning.

Ensure that Circular Signal Modules have prominent and permanent markings to designate the proper orientation of the signal module in the traffic signal housing. This marking should be an up arrow or the word “UP” or “TOP”.

Ensure Circular Signal Module meets the photometric requirements as indicated and described in the ITE VTCSH LED Circular Signal Supplement.

Supply Red and Yellow LEDs that utilize AllnGap technology, either AS (Absorbing Substrate or TS (Transparent Substrate) and do not exhibit degradation of more than 30% of their initial light intensity following accelerated life testing (operating at 185 F (85 C) and 85% humidity, for 1000 hours). AlGaAs technology is not acceptable.

Supply Green LEDs that utilize gallium nitride technology.

5. Vehicle Arrow Signal Modules

Supply LED Arrow Signal Modules that fit in standard incandescent vehicle traffic signal housings and meet the Performance specification of ITE Vehicle Traffic Control Signal- LED Vehicle Arrow Traffic Signal Supplement.

Ensure that Arrow Signal Modules provided are omni directional and marked as OD so that they may be rotated at any angle. Ensure the Arrow modules Photometrics support the luminous intensity as indicated in table 925-19.

Before delivery of any modules supply certification that module is to be in compliance with these specifications. In addition substantiating documentation must be supplied from an independent test laboratory to show the product has passed design qualification testing in accordance with section 6.4 of the ITE Vehicle Traffic Control Signal Heads: LED Circular Signal Supplement. Ensure the report includes a Minimum Maintained Luminous Intensity chart for the module being provided that uses the same horizontal and vertical angles as shown in Table 1 of the ITE Vehicle Traffic Control Signal Heads: LED Vehicle Arrow Traffic Signal Supplement. Ensure all modules are provided with a signed copy of the production and test and inspection as detailed in section 6.3 of the ITE Vehicle Traffic Control Signal Heads: LED Vehicle Arrow Traffic Signal Supplement.

Supply lenses for that are made of ultraviolet stabilized polycarbonate. Ensure that the external lens surface is smooth, with no raised features, to, minimize the collection of dirt, diesel smoke, and other particulate contaminates, and to facilitate periodic cleaning. Supply Red and Yellow LEDs that utilize AllnGap technology, either AS (Absorbing Substrate or TS (Transparent Substrate) and do not exhibit degradation of more than 30% of their initial light intensity following accelerated life testing (operating at 185° F (85° C) and 85% humidity, for 1000 hours). AlGaAs technology is not acceptable.

Supply Green LEDs that utilize gallium nitride technology.

Bi-Modal signal heads shall meet the standards for both Yellow and Green LEDs mentioned above.

Supply LED Arrow Signal Modules that fit in standard incandescent vehicle traffic signal housings and meet the "ITE Vehicle Traffic Control Signal Heads Part 3: Light Emitting Diode (LED) Vehicle Traffic Signal Modules". Use Table 925-19 for all references to minimum maintained Intensity values. Ensure the LED arrow modules meet the required luminous intensity as shown in Table 925-19.

Table 925-19 Minimum Maintained Luminous Intensity Values for Arrow LED Indications

Angle					Angle				
Ver	Hor	12 inch (300 mm)			Ver	Hor	12 inch (300 mm)		
+	+ or -	Red	Yellow	Green	-	+ or -	Red	Yellow	Green
2.5	2.5	56.8	141.6	73.9	2.5	2.5	56.8	141.6	73.9
	7.5	47	117.1	61.1		7.5	47	117.1	61.1
	12.5	32.1	80.1	41.8		12.5	32.1	80.1	41.8
	17.5	18.2	45.3	23.7		17.5	18.2	45.3	23.7
	22.5	8.5	21.2	11.1		22.5	8.5	21.2	11.1
	27.5	3.3	8.2	4.3		27.5	3.3	8.2	4.3
7.5	2.5	47	117.1	61.1	7.5	2.5	47	117.1	61.1
	7.5	38.9	97	50.6		7.5	38.9	97	50.6
	12.5	26.7	66.5	34.7		12.5	26.7	66.5	34.7
	17.5	15.1	37.7	19.7		17.5	15.1	37.7	19.7
	22.5	7.1	17.7	9.2		22.5	7.1	17.7	9.2
	27.5	2.8	6.9	3.6		27.5	2.8	6.9	3.6
12.5	2.5	32.1	80.1	41.8	12.5	2.5	32.1	80.1	41.8
	7.5	26.7	66.5	34.7		7.5	26.7	66.5	34.7
	12.5	18.3	45.7	23.9		12.5	18.3	45.7	23.9
	17.5	10.5	26.1	13.6		17.5	10.5	26.1	13.6
	22.5	5.0	12.4	6.4		22.5	5.0	12.4	6.4
	27.5	-	-	-		27.5	-	-	-
17.5	2.5	18.2	45.3	23.7	17.5	2.5	18.2	45.3	23.7
	7.5	15.1	37.7	19.7		7.5	15.1	37.7	19.7
	12.5	10.5	26.1	13.6		12.5	10.5	26.1	13.6
	17.5	6.0	15.0	7.8		17.5	6.0	15.0	7.8
	22.5	2.9	7.2	3.8		22.5	2.9	7.2	3.8
	27.5	-	-	-		27.5	-	-	-
22.5	2.5	8.5	21.2	11.1	22.5	2.5	8.5	21.2	11.1
	7.5	7.1	17.7	9.2		7.5	7.1	17.7	9.2
	12.5	5.0	12.4	6.4		12.5	5.0	12.4	6.4
	17.5	2.9	7.2	2.8		17.5	2.9	7.2	2.8
	22.5	-	-	-		22.5	-	-	-
	27.5	-	-	-		27.5	-	-	-
27.5	2.5	3.3	8.2	4.3	27.5	2.5	3.3	8.2	4.3
	7.5	2.8	6.9	3.6		7.5	2.8	6.9	3.6
	12.5	-	-	-		12.5	-	-	-
	17.5	-	-	-		17.5	-	-	-
	22.5	-	-	-		22.5	-	-	-
	27.5	-	-	-		27.5	-	-	-

6. Pedestrian Signal Modules

   Supply LED Pedestrian Traffic Signal Modules that fit in standard pedestrian one section signal head manufactured in accordance with the ITE Pedestrian Traffic Control Signal Indications (PTCSI) housings and meet the ITE Pedestrian Traffic Signal Modules specification.

   Ensure that the Pedestrian Indications for the "Hand" and "Man" are filled in so as to provide a solid indication. Do not supply Pedestrian Indications for the Hand and Man that are "outlines".

   Ensure that Pedestrian Signal Modules have prominent and permanent markings to designate the proper orientation of the signal module in the pedestrian signal housing. This marking should be an up arrow or the word "UP" or "TOP".

   Ensure Pedestrian Signal Module meets the photometric requirements as indicated and described in the ITE PTCSI LED Pedestrian Traffic Signal Module Specification.

Supply Portland Orange LEDs that utilize AllnGap technology, either AS (Absorbing Substrate or TS (Transparent Substrate) and do not exhibit degradation of more than 30% of their initial light intensity following accelerated life testing (operating at 185° F (85° C) and 85% humidity, for 1000 hours). AlGaAs technology is not acceptable.

Supply White LEDs that utilize InGaN technology.

B. Fabrication

General Provisions 101 through 150.

C. Acceptance

General Provisions 101 through 150.

D. Materials Warranty

Ensure that LED traffic signal modules and LED Pedestrian modules are performance warranted to be in compliance with the minimum intensity values as shown in Table 925-19. Provide independent laboratory test results indicating that LED indications satisfy the minimum intensity Standards for LED traffic signal modules, measured at 120 V AC and 165 ºF (74 °C), for a period of five (5) years.

Ensure that the manufacturer's name, part number, date code, and electrical characteristics of the LED signal module is visible on the assembly, and that each LED signal module is identified for warranty purposes.

925.2.16 LED Pedestrian and Countdown Signal Module

A. Requirements

This specification covers LED traffic signal module designed as a retrofit replacement for the message bearing surface of nominal 16" x 18" (400 mm x 450 MM) traffic signal housing built to the PTSCI Standard. The message bearing surface of the module consists of an overlapping "Hand" and "Man" Symbols with a numerical display of numbers from 00 to 99.

1. General Requirements

   Ensure that the unit supplied meets the applicable portions of section 925.15 of this specification.

   Ensure that the message numbers "00" to "99" are a minimum of 9 inches (228 mm) in height and consist of two rows of LEDs.

   Ensure the module fits in the Pedestrian Signal Housing without modification to the housing and requires no special tools for installation.

   Supply LED signal modules that are watertight when mounted in the traffic signal housing.

   Supply life data from the LED Signal Module manufacturer to calculate the expected useful life

   Supply modules with permanent markings for date of manufacture and date of installation.

2. Optical

   Provide test data from an independent laboratory to verify that the performance of the product meets current ITE requirements.

   Ensure that the individual LEDs are wired such that a catastrophic failure of one LED will result in the loss of not more than 5% of the signal module light output.

   The failure of a single LED in a string causes loss of light from only that LED, not the entire string or indication.

   Provide control circuitry that prevents the current flow through the LEDs in the "off" state to avoid any false indications as may be perceived by the human eye during daytime and nighttime hours.

   Ensure that the LED signal module is operationally compatible with existing or new supplied conflict monitors (NEMA TS-1, NEMA TS-2, Model 210, Model 2010, ITS Cabinet CMU and AMU.

   Ensure that the LED Signal Module is operationally compatible with existing or new supplied load switches.

   Ensure that the intensity of the LED signal module does not vary by more than 10% over the allowable voltage range as specified in the electrical section below.

   Ensure that the LED signal modules maintain not less than 90% of the required intensity, as defined by the ITE intensity Standards for LED traffic signal modules.

   Ensure that each module provides an average luminous of at least 3750 candela per square meter of lighting surface for the "Hand" and 5300 candela per square meter for the Man symbol.

   Ensure this over the temperature range of –40 ºF to 165 ºF (–40 ºC to + 74 ºC) at 120 V AC, when new and after four (4) years of field installation.

Provide an exterior lens which is uniform and frosted to reduce sun phantom effect.

3. Electrical

   Supply LED signal modules that operate over the temperature range of –40 ºF to 165 ºF (-40 °C to 74 ºC).

   Ensure that the power factor is 90% or greater, at nominal rated voltage, at 77 ºF (25 °C), after 60 minutes of operation.

   Ensure that the total harmonic distortion (THD) is less than 20% at rated voltage, at 77 ºF (25 °C) and that all LED traffic signal modules are in compliance with FCC noise regulations.

   Ensure that the LED signal modules operate on line voltage, 120 V AC nominal, and are able to operate over the voltage range of 80 V AC to 135 V AC.

   Provide transient voltage suppression rated at 1,500 W for 1 millisecond and fusing with a maximum rating of 2 A to minimize the effect and repair cost of an extreme over voltage situation or other failure mode.

   Ensure the modules allow a reduction of the intensity of the light output in response to an input from the traffic signal controller. Ensure the minimum light output when dimmed is not less than 30% of the minimum maintained luminous intensity as defined in the applicable ITE Signal Head Module.

4. Operation

   Supply LED Modules which start counting when the flashing "Don't Walk" Indication starts and will countdown to "0" when the steady "Don't Walk" signal turns on. Ensure that the countdown numbers remain continuously illuminated through the flashing don't walk interval. Ensure that the unit maintains a consistent countdown during a short power failure (i.e. Traffic Controller does not restart). Ensure that if Traffic Controller restarts that the countdown timer display is turned off until one full pedestrian clearance Cycle is timed. Ensure that the unit will turn off the counter if the steady Don't Walk Display starts while the countdown timer is displaying a number other than 00.

B. Fabrication

General Provisions 101 through 150.

C. Acceptance

General Provisions 101 through 150.

D. Materials Warranty

Ensure that LED traffic signal modules and LED Pedestrian modules are performance warranted to be in compliance with the latest ITE and CALTRANS minimum intensity Standards for LED traffic signal modules, measured at 120 V AC and 165 ºF (74 °C), for a period of five (5) years.

Ensure that the manufacturer's name, part number, date code, and electrical characteristics of the LED signal module is visible on the assembly, and that each LED signal module is identified for warranty purposes.

925.2.17 Blank-Out Signs

A. Requirements

Ensure that each sign provides a clearly visible and definable legend for 500 feet with ample safety factors.

Provide hardware to mount the sign on standard 1.5 inch (38 mm) pipe brackets or to mount directly to signal mast arms or span wire or as outlined in the Plans.

Ensure LED blank-out signs conform to the requirements of section 925.2.15 for LED modules and optical requirements.

Supply blank-out signs capable of displaying one message at a time in one direction.

1. Case

   Use a case formed from aluminum extrusion F1-6-E and a special aluminum door frame angle.

   For Alloy 6063-T5, ensure that the wall is at least 0.075 inches thick and the corners and joints are at least 0.080 inches (2 mm) thick.

   Use filler arc for all welding. Ensure all hinges and fastening hardware, nuts, bolts, fasteners on the housing and internal components are stainless steel

   Use a BR-type take-apart door hinge and draw bolt. Furnish one P-15 1.5 inch (38 mm) hub on the top surface.

   Prime the entire case with zinc chromate, bake the inside with two coats of non-yellowing white, and paint the outside with two coats of highway yellow.

2. Electrical

   Ensure that all blank-out signs are LED and conform to current ITE Standards. Supply all signs with the necessary mounting hardware to provide for mounting as shown on the Plans. Provide mounting for one way or two way configurations.

   Obtain approval for messages and letter dimensions from the Engineer.

3. Sun Phantom Screen

   Attach to each sign a heavy-duty aluminum louver-type sun phantom screen covering the entire sign face. Slant the louvers down enough to eliminate the sun glare without obstructing the view of the sign face.

4. Painting

   Paint the signal surfaces, inside and out, with two coats of oven-baked enamel in addition to the primer coat. Paint the non-illuminated portions of the signal face black. Paint the housings, brackets, fittings, etc. highway yellow.

5. Lens

   Use a fabricated, three-section Plexiglas lens clear face, with or without legend, which can accept a silk-screened legend on the first surface. Provide a thickness of at least 0.31 inches (8 mm).

6. Legend

   Acceptable legends are as follows:

   Text:

   - NO LEFT TURN
   - NO RIGHT TURN
   - SIGNAL AHEAD
   - NO TURNS

   Symbols:

   - NO LEFT TURN SYMBOL
   - NO RIGHT TURN SYMBOL

B. Fabrication

General Provisions 101 through 150.

C. Acceptance

General Provisions 101 through 150.

D. Materials Warranty

Refer to Subsection 925.2.01.D for Materials Warranties.

925.2.18 Lane-Use Control Signal

A. Requirements

Ensure that all signals are LED and conform to current ITE Standards. Supply all signals with the necessary mounting hardware to provide for mounting as shown on the Plans. Provide mounting for one way or two way configurations.

1. General Requirements
   a. Weight

      Ensure that one-way units weigh not more than 50 pounds (23 kg) and two-way units weigh not more than 60 pounds (27 kg), regardless of messages.

   b. Color

      Ensure that the color of lane-use control signal indications is clearly visible for 0.25 mile (0.38 km) at all times under normal atmospheric conditions. Provide lane-use control signals with a visibility angle of a minimum of 60 degrees.

   c. Housing

      Ensure that the housing of each signal is polycarbonate or a one-piece corrosion resistant aluminum alloy die casting or equal and meets current related ASTM Specifications.

      Ensure that all configurations are balanced to provide a plumb hanging unit. Ensure that all components are readily and easily accessible from the open door.

d. Housing door

Ensure that the housing door is one-piece corrosion resistant aluminum or polycarbonate and meets current related ASTM Specifications.

Provide two substantial door hinges with stainless steel hinge pins. Ensure hinges are on the left side of each section with a latch boss on the right side.

Provide stainless steel dual eye bolt latches or similar approved devices to securely close and latch the housing door. Equip the housing or door with a continuous molded neoprene gasket to make the interior of the unit dustproof and waterproof.

e. Wiring

Provide each signal housing with a complete terminal board. Ensure that one side of terminal strip accommodates socket leads and the other side accommodates field wires. Ensure that the terminal board provides totally separate wiring of each symbol.

Ensure each lamp is separately wired to a terminal block located in each housing. Provide each lamp holder socket with color-coded leads.

For combination symbols, color-code socket leads separately to distinguish between red "X", yellow "X" or downward arrow symbols. Provide leads that are No. 14 AWG type THW, 600 V AC, and fixture wire with 194 ºF (90 °C) thermoplastic insulation.

f. Visors

Provide visors not less than 12 inches (300 mm) long for multiple unit and 7 inches (175 mm) long for single unit signals for each signal face.

Ensure that the visors are constructed of sheet aluminum or polycarbonate and encompass the top and sides of each section.

g. Painting

Paint all signal surfaces, inside and out, with two coats of oven baked enamel in addition to the primer coat. Paint the insides of the visors flat black.

The non-illuminated portions of the signal face black or dark gray and all housings, brackets and fittings highway yellow.

h. Hardware and fittings:

Supply all necessary fittings, pipe brackets, hangers, hubs, etc. for the type of mounting specified. Ensure all fittings are aluminum or galvanized coated to prevent rust and corrosion.

i. Sun -phantom screen

Provide each signal face with a screen, which substantially counteracts sun phantom effect.

2. Signal Display

Ensure that the symbols, which are on an opaque black or dark gray background, meet ITE requirements and are blacked out when not illuminated.

3. LED Optical System

a. Ensure that the LEDs supplied for the lane use control signal meet the Specifications for a type module as required in section 925.2.14. Ensure that each separate color indication in a sign face is illuminated by independent LEDs

b. Ensure that the green arrow indication does not utilize the same termination points as any "X" indication.

c. Ensure that total power required for any single indication does not exceed 250 W.

d. Ensure that all modules are contained behind a water tight signal face or lens assembly.

e. Ensure that the entire optical system is weatherproof and is not vulnerable to extremes in temperature or moisture.

B. Fabrication

General Provisions 101 through 150.

C. Acceptance

General Provisions 101 through 150.

D. Materials Warranty

Refer to Subsection 925.2.01.D for Materials Warranties.

925.2.19 Pedestrian Push Button Station

A. Requirements

Ensure that Pedestrian push buttons are of tamperproof construction and consist of a direct push type button and single momentary contact switch in cast aluminum housing or Piezo driven solid state switch rated for a minimum of 50 V. The pushbutton cover shall also be of cast aluminum. The housing and cover shall be free of voids, pits, dents, molding sand excessive foundry grinding marks. Exterior surface shall be smooth and cosmetically acceptable, free of molding fins, cracks and other exterior blemishes.

Provide housing and cover with an alodine conversion coating so as to provide a proper base for paint adhesion. Finish the housing with baked enamel and paint the push button housing and Pedestrian heads highway yellow (unless otherwise specified by the Engineer).

The assembly shall be capable of being mounted to a flat or curved surface. Ensure the assembly includes the appropriate sign as shown in the Plan Details.

Ensure that any screws or bolts are stainless steel and vandal proof. Provide the unit with a 0.5 inch (13 mm) threaded opening with plug.

Ensure that the assembly is weatherproof and so constructed that when properly installed, it will be impossible to receive an electrical shock under any weather condition.

Ensure that Pedestrian Pushbuttons are integrated with a sign as shown in the standard details. Provide the sign size as indicated on the Plans. GDOT will allow an adapter of cast aluminum. GDOT will allow one of three options:

1. The use of a 9 inch (229 mm) by 15 inch (381 mm) cast aluminum plate adapter to upgrade existing push button station, 9 inch (229 mm) by 12 inch (305 mm).
2. Push button station assembly 9 inch (229 mm) by 15 inch (381 mm) sign w/round pushbutton adapter.
3. The use of a 9 inch (229 mm) by 15 inch (381 mm) cast aluminum plate adapter to upgrade existing push button station, 5 inch (127 mm) by 7 inch (178 mm).

Ensure that the Pedestrian Push Button sign adapter plate is, die-cast aluminum and separate, such that it is interchangeable.

Ensure that the Pedestrian Push Button sign adapter assembly be, die-cast aluminum and attached, prior to shipping.

The plate shall be finished with highway yellow baked enamel paint (unless otherwise specified by the Engineer).

Ensure the button assembly is configured to be a mechanical switch with ball and 2 inch (50 mm) mushroom plunger when not using Piezo driven switch.

B. Fabrication

General Provisions 101 through 150.

C. Acceptance

General Provisions 101 through 150.

D. Materials Warranty

Refer to Subsection 925.2.01D for Materials Warranties.

925.2.20 Signal Head Back Plate

A. Requirements

Ensure that each back plate is designed to properly shield a traffic signal head from background distractions for better visibility.

Design the back plates to extend beyond the signal head a minimum of 4 inches (100 mm) and maximum of 6 inches (150 mm) on all sides and have all corners rounded with minimum 2 inch (50 mm) radii.

Construct the back plates from UV stabilized polycarbonate, ABS plastic, or aluminum material. Ensure that polycarbonate back plates are at least 0.15 inches (4 mm) thick; ABS back plates are at least 0.05 inches (1 mm) thick; aluminum back plates are at least 0.06 inches (1.5 mm) thick. All back plates shall be constructed with a finished color of flat black. Aluminum backplates should be finished with a durable, flat black colored powder coat.

Design the back plates with predrilled holes to provide for simple attachment to the specified brand, size and configuration of traffic signal head with all mounting hardware included.

Ensure that the back plates do not interfere with the signal mounting hardware. Ensure that the back plates include louvers.

Ensure back plates project a rectangular appearance at night by having a 2 inch (50mm) yellow TP IX retroreflective strip along the back plate perimeter.

B. Fabrication

General Provisions 101 through 150.

C. Acceptance

General Provisions 101 through 150.

D. Materials Warranty

Refer to Subsection 925.2.01.D for Materials Warranties.

925.2.21 Signal Head Visors

A. Requirements

Typically, visors are one piece tunnel type and removable unless specified otherwise in the signal Plans.

Ensure that visors are polycarbonate and at least 9 inches (225 mm) deep for 12 inch (300 mm) heads. Special angle visors are full circle with the long side at least 18 inches (450 mm) deep. Ensure that visors provide a positive method of attaching to the door of the signal head that do not allow rotation. An acceptable method is to provide tabs that use stainless steel screws.

Unless otherwise specified by the Engineer, provide black signal head visors.

If special tools are required for visor adjustment, provide one set per project. Coordinate delivery of tools with District Signal Engineer.

B. Fabrication

General Provisions 101 through 150.

C. Acceptance

General Provisions 101 through 150.

D. Materials Warranty

Refer to Subsection 925.2.01.D for Materials Warranties.

925.2.22 Signal Head Louvers

A. Requirements

Ensure that louvers (with the vanes oriented vertically) are directional with a 7-degree cutoff right of center. Rotating the louver 180 degrees will produce a 7-degree cutoff left of center.

Provide twelve-inch (300 mm) louvers with 5 vanes. Finish all louvered surfaces in flat black. Ensure that programmable louvers are directional with a 7-degree cutoff and that all louver surfaces have a flat black finish.

Ensure that the units can be installed and programmed in accordance with the manufacturer's instruction on visors that are recommended by the manufacturer.

Have the programmable louver display approved by the Engineer prior to placing the signal in stop and go operation.

If special tools are required for louver adjustment, provide one set per project. Coordinate delivery of tools with District Signal Engineer.

B. Fabrication

General Provisions 101 through 150.

C. Acceptance

General Provisions 101 through 150.

D. Materials Warranty

Refer to Subsection 925.2.01.D for Materials Warranties.

925.2.23 Hardware For Mast Arm Mounting

A. Requirements

Ensure that signal heads are rigidly mounted to the mast arm. Provide mounting hardware that is in accordance with the following:

1. Adjustability

   Ensure the mounting bracket is completely adjustable such that it allows; rotational adjustment about the bracket axis; vertical adjustment; rotational adjustment about the Mast Arm; and rotational adjustment from the vertical plane.

2. Attachment

   Ensure the bracket is provided with air-craft grade galvanized steel cables with stainless steel fastening hardware and make a minimum of two wraps around to fasten the bracket to the arm. Ensure the bracket is easily adjustable to fit all sizes of round, elliptical or other shaped structure without special tools or equipment

3. Signal/Sign Accommodations

   Ensure the bracket attaches to the signal or sign to assure maximum rigidity. When clamping the signal top and bottom, ensure a standard bracket accommodates all major signal manufacturers signal for 3, 4 and 5 section signal head configurations.

4. Wiring

   All electrical wiring shall be completely concealed with the bracket. The vertical support shall be a gusseted "C" shaped extruded aluminum tube to accommodate the signal cable regardless of vertical positioning of the tube.

5. Materials

   The upper and lower arms shall be cast 319 aluminum or equivalent. The lower arm shall be internally threaded to accommodate the threaded vertical support tube. Ensure the lower arm is furnished with plastic covers which slide and snap into place. Both arms shall have 72 tooth serrations cast into the arm to assure a positive lock with signal housing and shall be secured about their rotational axis with setscrews. Ensure the arms have a tri-bolt arrangement for attachment to the signal housing.

   Ensure the vertical support is gusseted tube extruded from 6063-T6 aluminum. Ensure the tube includes a vinyl closure strip.

   Ensure the mast arm clamp assembly is cast from 713 aluminum alloy or equivalent. Provide an assembly that allows for 360 degrees of rotation with no internal bracing obstructing the center opening. Provide two air-craft grade galvanized steel cables that have minimum tensile strength of 100,000 PSI (690 MPa).

   Ensure that each bracket is complete with all necessary bolt, washers, gaskets and miscellaneous items to allow assembly of the signal to the bracket and the bracket to the mast arm. Ensure all aluminum parts have an Aldine finish. All non stainless steel parts shall have a yellow zinc di-chromate or galvanize finish.

This item will be approved upon submittal of catalog cuts. Refer to Standard Detail Drawings for additional information.

B. Fabrication

General Provisions 101 through 150.

C. Acceptance

General Provisions 101 through 150.

D. Materials Warranty

Refer to Subsection 925.2.01D for Materials Warranties.

925.2.24 Hardware For Signal Head Pole Mounting

A. Requirements

Ensure this item consists of hardware adequate for the specific mounting. As a minimum provide the following hardware. 1 ½ inch pipe nipples of die cast aluminum that are a minimum of 12 inches (300 mm) and threaded with 1 ½ inch NPS threads on either end. On the upper and lower arm there shall be a serrated 72 tooth boss with set screw. Use a tri-stud adaptor to attach the signal housing to the mounting hardware. The upper arm shall have a neoprene gasket to provide weather tight fit. Hub plates for pole mounting shall be provided and they shall be appropriate for the particular mounting (round or flat). Hardware shall die cast aluminum alloy 380 or extruded. All die cast parts shall be cleaned in an alkaline cleaning compound Extruded parts shall have an alodine conversion coating to provide proper base for paint

adhesion. The assembly is to be painted federal yellow and baked in an oven. Ensure the assembly is provided with all required hardware. All other hardware shall be stainless steel.

B. Fabrication

General Provisions 101 through 150.

C. Acceptance

Ensure that this item consists of hardware as shown in the standard details.

This item will be approved upon submittal of catalog cuts.

D. Materials Warranty

Refer to Subsection 925.2.01.D for Materials Warranties.

925.2.25 Balance Adjuster

A. Requirements

Ensure this item consists of hardware that is cast from 316 Stainless Steel or 65-45-12 Ductile Iron or equivalent. Ensure castings are free of voids, pits, dents, molding sand and excessive grinding marks. Exterior surface shall be cosmetically acceptable and free of molding fins, cracks and other exterior blemishes. All hardware shall be supplied and be stainless steel or galvanized.

B. Fabrication

General Provisions 101 through 150.

C. Acceptance

Ensure this item consists of hardware as shown in the Standard Details. This item will be approved upon submittal of catalog cuts.

D. Materials Warranty

Refer to Subsection 925.2.01.D for Materials Warranties.

925.2.26 Hardware For Mounting Pedestrian Head

A. Requirements

Ensure this item meets the same criteria as 925.2.24.A and is in accordance with the Standard Details.

B. Fabrication

General Provisions 101 through 150.

C. Acceptance

Ensure this item consists of hardware as shown in the Standard Details. This item will be approved upon submittal of catalog cuts.

D. Materials Warranty

Refer to Subsection 925.2.01.D for Materials Warranties.

925.2.27 Pedestal Pole

A. Requirements

The Pedestal poles support vehicle signal heads, pedestrian signal heads, IVDS and push button. Furnish Pedestal poles according to type and overall length.

Pedestal pole for vehicle display for one lane ramp metering operation shall be constructed to support one 12" (300 mm) signal head and one 8" (200 mm) signal head assembly as shown in the Plans.

Pedestal pole for ramp meter advance warning sign and flashing beacon shall be constructed to meet the sign manufacturer's structural requirements. Pedestal pole mounting adapter shall rigidly attach to the sign case's structural bracing. Cable entrance to the sign case shall be through the inside of the pole.

1. Ensure that all poles are made of one continuous piece of bare finish spun aluminum from top to base connection for the entire height of the pole.

The shaft, of appropriate shape, may or may not be uniformly tapered from butt to tip. A pole used to support only a traffic signal may be tapered.

2. Fabricate pole caps, when required, of cast material, and secure in place with set-screws.

B. Fabrication

General Provisions 101 through 150.

C. Acceptance

General Provisions 101 through 150.

D. Materials Warranty

Refer to Subsection 925.2.01.D for Materials Warranties.

925.2.28 Pedestal Pole Base

A. Requirements

Ensure that all design radii are smooth and intact. Ensure that the exterior surface finish is smooth and cosmetically acceptable by being free of molding fins, cracks and other exterior blemishes.

Fabricate from new aluminum ingot. Do not use scrap materials.

Minimum requirements are as follows:

ALUMINUM ALLOY NO.	319
ELONGATION [% IN 2 IN. (50 mm)]	2.5
TENSILE STRENGTH, KSI (MPa)	34 (234)
BRINELL HARDNESS	85
YEILD STRENGTH, KSI (MPa)	19 (131)
SHEAR STRENGTH, KSI (MPa)	232 (1600)

1. Ensure this item consists of square cast aluminum with bare finish, and has a minimum weight of 21 pounds (9.5 kg). Thread the upper end to receive a 4 inch (100 mm) National Pipe Thread (NPT) pipe shaft.
2. Design the base so that it may be fastened to a foundation with four (4) 0.75 inch (19 mm) anchor bolts located 90 degrees apart on the bottom of the base. Provide slots in the bottom of the base 1.5 inch (38 mm) wide and 2.5 inches (63 mm) long measured along the circumference of the bolt circle, allowing a proper fit even if the bolts are placed slightly off center.
3. Design the base to accommodate bolt circles of a minimum of 12 inches (300 mm) through a maximum of 14.5 inches (363 mm) and anchor bolts with a minimum of 0.63 inches (16 mm) through 1 inch (25 mm) diameter.
4. Design the base with a removable plastic door. Ensure that the door opening is free of burrs and sharp edges and is no less that 8.5 inches (213 mm) square. Attach the door to the base using one socket button head screw to prevent unauthorized entry.
5. Ensure that the base meets or exceeds current AASHTO breakaway requirements. Provide test reports from an FHWA approved independent laboratory certifying that the base has been tested and meets all applicable requirements. In addition, supply a statement of certification from the FHWA stating such tests have been accepted and approved.
6. In order to prove structural soundness, provide a certification from a recognized independent structural laboratory certifying that the base will withstand a bending moment of 10,750 ft-lbs (14 575 N-m).
7. Ensure that the door is injection molded from ABS plastic to deter vandalism and theft, and has the following properties:

TEST	ASTM METHOD	VALUE
Tensile @ Yield [0.13 inches (3 mm)]	D638	6600 psi (45 500 kPa)
Flexural @ Yield	D790	11,000 psi (75 850 kPa)
Rockwell Hardness	D785	101 (R Scale)
Notched Izod	D256	5 ft-lb./in. (0.03 N-m/mm)

8. Ensure that the door exhibits the following properties:

- Has an edge thickness of 0.25 inches (6 mm) and a minimum thickness of 0.156 inches (4 mm)
- Contains flame-retardant material, meeting or exceeding underwriters laboratories UL 94 test H.B
- Gray aluminum tone in color, unless otherwise specified
- Contains ultra-violet inhibitors and stabilizers for protection against UV degradation
- Is injection molded with a smooth front finish
- Has flat and straight surfaces without blisters, buckling or warping; have reinforcing ribs
- Contains two (2) injection molded lugs on the bottom of the door with slots of the proper width and depth to fit the base door opening.

9. Supply the base with a set of four (4) anchor bolts, 0.75 inch (19 mm) diameter by 18 inches (450 mm) in length, material per ASTM A 572A 572M, Galvanized per ASTM A 153/A 153M. Supply (1) hex nut and (1) flat washer with each bolt.

B. Fabrication

General Provisions 101 through 150.

C. Acceptance

General Provisions 101 through 150.

D. Materials Warranty

General Provisions 101 through 150.

925.2.29 Pedestal Pole Foundation Anchor Assembly

A. Requirements

Provide Foundation Anchor assembly that is 4 inches (100 mm) in diameter by 56 inches (1400 mm) with a single helical blade and a square fixed baseplate with combination underside holt-head retainer and dirt scrappers allowing flush- mount with the ground.

Provide Baseplate that is steel and conforms to ASTM A-36 material. Provide pipe with helical blade that is manufactured from ASTM A-53ERW Grade B Steel. Ensure 4 inch pipe has 2 inch (50 mm) by 3 inch (75mm) entrance hole 18 inches below the steel plate. Ensure the anchor assembly is hot dipped galvanized finish after fabrication and complies with ASTM A-123.

Ensure base plate has four slotted mounting holes to fit bolt circles from 7 ¾ inch (195mm) to 14 ¾ inch (375 mm. Provide 4 slotted mounting hole with a ¾ inch keyhole slot to permit bolt installation and replacement from the top surface without digging under the baseplate.

Ensure assembly is furnished with;

- Quantity of four ¾ inch(20 mm) -10NC x 3 inch(75 mm) square head galvanized ASTM 325 anchor bolts;
- Quantity of four ¾ inch(20 mm) plain flat galvanized washers;
- Quantity of four 3/16 inch(5 mm) thick galvanized plate washers;
- And, quantity of four ¾ inch (20 mm) galvanized hex nuts.

B. Fabrication

General Provisions 101 through 150.

C. Acceptance

General Provisions 101 through 150.

D. Materials Warranty

Refer to Subsection 925.2.01.D for Materials Warranties.

925.2.30 Timber Poles

A. Requirements

Ensure that all timber poles meet the requirements of Section 861. Poles must be inspected and tested by the GDOT Office of Materials and Research and hammer stamped by the inspector.

Ensure that all poles have a brand or stamp 10 feet (3 m) from the butt that notes the type wood, date of manufacture, manufacturer, class and length.

Ensure that all timber poles that have guy attachments or support span wire or arms that suspend signal heads over the roadway or sidewalk are Class II.

Poles that support loop lead-in, messenger or communications cable that does not have guy attachments may be Class IV size.

Ensure that all poles meet the requirements in the table below unless otherwise noted on the traffic signal Plans or list of materials.

		Minimum Circumference
Class	**Nominal Length, ft (m)**	**At 6 feet (2.4 m) from butt, in. (mm)**
II	30 (9)	34.0 (850)
II	35 (10.5)	36.5 (913)
II	40 (12)	38.5 (963)
II	45 (13.5)	40.5 (1013)
II	50 (15)	42.0 (1050)
IV	30 (9)	29.5 (738)
IV	35 (10.5)	31.5 (788)
IV	40 (12)	33.5 (838)
IV	45 (13.5)	35.0 (875)

B. Fabrication

General Provisions 101 through 150.

C. Acceptance

General Provisions 101 through 150.

D. Materials Warranty

Refer to Subsection 925.2.01.D for Materials Warranties.

925.2.31 Traffic Signal Pull Box

A. Requirements

Ensure traffic signal pull boxes are matched assemblies consisting of boxes and covers from the same manufacturer.

For all pull boxes except Types 4 and 5, use pull boxes manufactured in a single unit for the full depth required in the size in an open bottom configuration. Do not use stacked pull boxes.

For pull boxes Types 4 and 5, use stacked pull boxes as shown in the Plans, where the top unit is open bottom and the bottom unit is closed bottom manufacture. In the bottom unit provide a drain hole.

Provide pull boxes that are non-metalic and gray or tan color.

Ensure that pull boxes meet all requirements of ANSI 77 2007 or current edition Tier 15. Provide compliance test documentation.

Provide a ¼-inch (6 mm) galvanized wire mesh between the gravel base and the open bottom box or closed bottom box drain hole for all pull box types.

Use Type 1 pull boxes [12 inches x 12 inches (300 mm x 300 mm)] for loop lead-ins. When loop lead-ins and splices and other cables are required, use Type 2 pull boxes [11 inches x 18 inches (275 mm x 450 mm)] or Type 3 pull boxes [17 inches x 30 inches (425 mm x 750 mm)]. Use Type 4, 4S, 5, 5S, 6 and 7 pull boxes for fiber optic cable. Furnish one-piece covers for all pull boxes except Types 5, 5S, and 7. Furnish two-piece covers for Types 5, 5S, and 7.

Furnish covers with a skid-resistant surface with a minimum coefficient of friction of 0.5 when tested in accordance with ASTM C1028.

Furnish covers with stainless steel hold-down bolts, minimum size 3/8-16.

Furnish covers with the logo "TRAFFIC SIGNAL" for pull box Types 1, 2 and 3, and with other pull box types when installed for traffic signal cabling at a traffic signal.

Unless otherwise shown in the Plans or installed for traffic signal cabling at a traffic signal, furnish covers with the logo "GDOT COMMUNICATIONS" for pull box Types 4, 4S, 5, 5S, 6 and 7.

Furnish pull box Types 4, 5, 6 and 7 with factory-installed cable racks and rack hooks.

Cable racks and rack hooks shall be hot-dipped galvanized steel.

Each cable rack rail shall be minimum 24 inches (600 mm) in length with rack hook mounting holes on the entire length. Install two racks on each of the pull box long side walls. For Type 4 and 5 pull boxes only, each cable rack rail may be comprised of two minimum 12 inch (300 mm) units installed on the stacked box side walls.

Mount cable racks to the side walls using minimum 3/8-16 stainless steel hardware.

Furnish a minimum of four rack hooks, minimum 6 inch length (150 mm), per pull box. Furnish an additional four rack hooks for each through cable stored in the pull box. Furnish an additional two rack hooks for each splice closure stored in the pull box.

Furnish Types 6 and 7 pull boxes with factory-installed non-metallic conduit terminators for Sch. 40 and SDR11 2-inch (53 mm) of the quantity and location as shown in the Plans, or for a different conduit size if shown in the Plans. Terminator bodies shall be manufactured from high-impact polystyrene or approved equivalent.

When joining conduits of dissimilar materials, furnish an airtight and watertight conduit adhesive intended for direct-contact underground use.

Refer to the Standard Detail Drawings and the Traffic Signal Design Manual for further information.

B. Fabrication

General Provisions 101 through 150.

C. Acceptance

General Provisions 101 through 150.

D. Materials Warranty

Refer to Subsection 925.2.01.D for Materials Warranties.

925.2.32 Prefabricated Controller Cabinet Base

A. Requirements

Provide controller cabinet bases that are precast polymer concrete and grey in color. Ensure the prefabricated controller cabinet base has the correct bolt pattern for the cabinet(s) to be installed. Provide prefabricated controller cabinet bases with UNC inserts as shown on plans. UNC inserts shall be stainless steel and be designed for a minimum of 15 foot-pounds (20 N-m) of torque.

Ensure that prefabricated controller cabinet bases are designed to withstand wind loading of 125 mph (200 km/h) with the cabinets as shown in the Plans mounted. Ensure that prefabricated controller cabinet bases are designed for a minimum static vertical load of 5,000 pounds (2262 kg) over a 10 inch (254 mm) by 10 inch (254 mm) by 1 inch (25 mm) thick distribution plate and withstand a tested load of 7,500 pounds (3394 kg). Ensure that prefabricated controller cabinet bases are designed for a minimum lateral load of 1800 pounds (814 kg) over an 18 inch (457 mm) by 24 inch (610 mm) by 1 inch (25 mm) steel plate applied to the longest side and shall withstand a tested load of 2700 pounds (1222 kg). The prefabricated controller cabinet base shall withstand a 50 foot-pound impact administered with a 12-pound weight having a "C" tup without puncture or splitting, in accordance with ASTM D2444. The prefabricated controller cabinet base shall meet the requirement of ASTM D543 Section 7, Procedure 1. Provide a copy of all test reports from a certified lab along with the materials certification package.

B. Fabrication

General Provisions 101 through 150.

C. Acceptance

General Provisions 101 through 150.

D. Materials Warranty

Refer to Subsection 925.2.01.D for Materials Warranties.

925.2.33 Loop Lead-In Cable

A. Requirements

Ensure that loop detector lead-in cable is No. 18 AWG, 3-pair shielded cable that meets IMSA specification #50-2.

Ensure that identification markings are stamped on the jacket.

B. Fabrication

General Provisions 101 through 150.

C. Acceptance

General Provisions 101 through 150.

D. Materials Warranty

Refer to Subsection 925.2.01.D for Materials Warranties.

925.2.34 Loop Detector Wire

A. Requirements

Ensure that loop detector wire, meets IMSA specification 51- -3 and is 14 AWG.

For special applications loop detection wire that meets IMSA specification 51-7, 14 AWG, may be used as directed by the Engineer.

Stamp identification markings on the cable jacket.

B. Fabrication

General Provisions 101 through 150.

C. Acceptance

General Provisions 101 through 150.

D. Materials Warranty

Refer to Subsection 925.2.01.D for Materials Warranties.

925.2.35 Aerial & Duct Signal Cable

A. Requirements

Ensure that aerial or duct (conduit) No. 14 AWG, stranded, 7-conductor, with black polyethylene (PE) jacket and 600 V AC rating meets IMSA specification #20-1. Use conductors that are straight, not twisted pairs.

B. Fabrication

General Provisions 101 through 150.

C. Acceptance

General Provisions 101 through 150.

D. Materials Warranty

Refer to Subsection 925.2.01.D for Materials Warranties.

925.2.36 Self-Supporting Twisted Pair Aerial Signal Communications Cable

A. Requirements

Ensure that self-supporting, figure eight, aerial signal communications cable, No. 19 AWG, stranded 6-pair conductors is rated at 600 V AC and meet IMSA specification #20-4-1984.

Use conductors that are twisted pairs with copper tape shield under a black PE jacket. Ensure that messenger strand is 0.25 inch (6 mm), 7-strand and conforms to ASTM A 475 Siemens-Martin grade or better with a Class A coating.

B. Fabrication

General Provisions 101 through 150.

C. Acceptance

General Provisions 101 through 150.

D. Materials Warranty

Refer to Subsection 925.2.01.D for Materials Warranties.

925.2.37 Underground Feeder Cable, Type UF

A. Requirements

Ensure that underground feeder cable, Type UF w/ground has two (2) conductors with pvc/nylon jacket and a minimum 600 V AC rating per UL #493. Two-conductor, No. 6 AWG wire may be used.

B. Fabrication

General Provisions 101 through 150.

C. Acceptance

General Provisions 101 through 150.

D. Materials Warranty

Refer to Subsection 925.2.01.D for Materials Warranties.

925.2.38 Messenger & Guy Strand (Span Wire)

A. Requirements

Ensure that all messenger and guy strand (span wire) conforms to ASTM A 475 Extra High Strength grade or better with a Class A coating, 7-wire span wire.

Ensure ¼-inch (6 mm) Messenger & guy strand shall be used to support interconnect cable or as tether spans.

Messenger & guy strand 0.31 inch (7 mm) shall be used only where it is essential to match an existing 0.31inch (7 mm) span wire that will not be replaced as part of a new installation.

Ensure all span wire for signal heads, blank out sign, optically programmed heads, lane control signs, standard, aerial or sidewalk guys uses a minimum Messenger & guy strand 0.38 inch (9 mm) as a minimum size.

B. Fabrication

General Provisions 101 through 150.

C. Acceptance

General Provisions 101 through 150.

D. Materials Warranty

Refer to Subsection 925.2.01.D for Materials Warranties.

925.2.39 Power Disconnect Box

A. Requirements

Ensure that all power disconnect boxes are NEMA 3R 240 V AC, 60 Amp Phase 1(metal non-fused 2 pole). Ensure the disconnect box is supplied with a padlock keyed as per directions of District Signal Engineer. Provide power disconnect box that is not fused and does not have a circuit breaker. Supply with a service grounding kit.

B. Fabrication

General Provisions 101 through 150.

C. Acceptance

General Provisions 101 through 150.

D. Materials Warranty

Refer to Subsection 925.2.01.D for Materials Warranties.

925.2.40 Cable Ties

A. Requirements

Ensure that all cable ties are nylon, ultraviolet resistant black and consist of the following as a minimum:

Nominal Length	**8 inches (200 mm)**
Width Tensile	**0.30 inches (7 mm)**
Strength	**120 pounds (55 kg)**

B. Fabrication

General Provisions 101 through 150.

C. Acceptance

General Provisions 101 through 150.

D. Materials Warranty

Refer to Subsection 925.2.01.D for Materials Warranties.

925.2.41 Lashing Rod

A. RequirementsEnsure that all lashing rods are sized in accordance with messenger and cable(s) diameters to be supported. Provide lashing rods that are of the same material as the messenger or guy strand.

B. Fabrication

General Provisions 101 through 150.

C. Acceptance

General Provisions 101 through 150.

D. Materials Warranty

Refer to Subsection 925.2.01.D for Materials Warranties.

925.2.42 Stainless Steel Lashing Wire

A. Requirements

Provide lashing wire that is type 316 stainless steel with 0.045 inch (1 mm) diameter.

B. Fabrication

General Provisions 101 through 150.

C. Acceptance

General Provisions 101 through 150.

D. Materials Warranty

Refer to Subsection 925.2.01.D for Materials Warranties.

925.2.43 Guy Guards

A. Requirements

Ensure that all guy guards are high impact resistant PVC with ultraviolet stabilizers added for retention of color. Ensure that insulators attach to the guy so that they cannot easily be removed. Use guy guards which are yellow unless otherwise directed.

B. Fabrication

General Provisions 101 through 150.

C. Acceptance

General Provisions 101 through 150.

D. Materials Warranty

Refer to Subsection 925.2.01.D for Materials Warranties.

925.2.44 Guy Strain Insulators

A. Requirements

Ensure guy strain insulators are protected from the environment including the effects of voltage, ultraviolet rays, and acid rain by a fully bonded, electrically tack-free, and impenetrable silicone rubber sheath. Each insulator shall be UL proof tested, and permanently marked to show date of test.

B. Fabrication

General Provisions 101 through 150.

C. Acceptance

General Provisions 101 through 150.

D. Materials Warranty

Refer to Subsection 925.2.01.D for Materials Warranties.

925.2.45 Universal Closure Kit

A. Requirements

Supply a Universal Signal Closure Kit to seal the signal head at either the top or bottom. Ensure that the kit will fit any manufacturer's signal head (top or bottom) without the use of special tools or modification.

1. Ensure that the gasket is 60-70 durometer neoprene.
2. Ensure that Closure Cap is injection molded ABS plastic. The plastic is to be loaded with UV stabilizers.
3. Ensure that Adapter Bar is made so that it will secure the closure cap and compensate for varying thickness of signal heads.
4. Provide two # 10 (9mm) screws to fit any manufacturer's signal head. Ensure that one screw is 0.75 inches (19 mm) in length and the second screw is 1 inch (25 mm) in length.
5. Pack each assembly in a clear plastic bag. Mark the bag with the manufacturer's name and part number. Include the Universal Signal Closure Kit in a package containing the span wire clamp and Tri-Stud wire entrance fitting.
6. Ensure that the Closure Cap is molded to closely match the color of the signal head (Federal Yellow). The adapter bar and screws are to be zinc plated steel.

B. Fabrication

General Provisions 101 through 150.

C. Acceptance

General Provisions 101 through 150.

D. Materials Warranty

Refer to Subsection 925.2.01.D for Materials Warranties.

925.2.46 Cast Aluminum Span Wire Clamp

A. Requirements

Provide Span Wire Clamps that are cast from Aluminum Alloy 713 or equivalent, free of voids, pits, dents, molding sand and excessive foundry grinding marks. Ensure that all design radii are smooth and intact.

Provide an exterior surface finish that is smooth and cosmetically acceptable, free of molding fins, cracks and other exterior blemishes. Ensure that span wire clamps are fabricated from aluminum ingot with minimum requirements as follows:

ALUMINUM ALLOY No.	713
YIELD STRENGTH, ksi (MPa)	25 (172)
TENSILE STRENGTH, ksi (MPa)	35 (240)
BRINELL HARDNESS	75
ELONGATING [% in 2 inches (50 mm)]	3

1. Ensure that the Span Wire Clamp can accommodate cables 0.25 inch (6 mm) to 0.63 inch (16 mm) diameter.
2. Ensure that the weight is less than 1.75 pounds (0.8 kg) with hardware.
3. Ensure that the Span Wire Clamp have a minimum overall length of 7 inches (175 mm).
4. Ensure that the Span Wire Clamp have a centerline dimension from cable to clevis pin of 2 inches (50 mm) [+/- 0.5 inches (13 mm)].
5. Ensure that the Span Wire Clamp have a cast aluminum cable bar to protect the cable when tightening the U-bolts.
6. Ensure that the Span Wire Clamp have a mounting opening of 0.75 inches (19 mm) [+/- 0.03 inches (0.8 mm)].
7. Ensure that the Span Wire Clamp have 0.5 inch (13 mm) - 13 NPT U-bolts with 0.5 inch (13 mm) lock washers and nuts.
8. Ensure that the clevis pin are 0.63 inch (16 mm) diameter with a length of 2.25 inches (56 mm) and secured with a hump back stainless steel cotter pin.
9. Ensure that the Clamp and Cable Bar have an Alodine 1200 conversion coating to help resists oxidation.
10. Ensure that the Clevis Pin and hardware are galvanized per ASTM 123/A 123M or stainless steel.

B. Fabrication

General Provisions 101 through 150.

C. Acceptance

General Provisions 101 through 150.

D. Materials Warranty

Refer to Subsection 925.2.01.D for Materials Warranties.

925.2.47 Cast Aluminum Tri-Stud Span Wire Entrance Fitting

A. Requirements

Ensure that the Tri-Stud Span Wire Entrance Fittings are cast from Aluminum Alloy 713 or equivalent, free of voids, pits, dents, molding sand and excessive foundry grinding marks.

Ensure that the all design radii are smooth and intact. Ensure that the exterior surface finish is smooth and cosmetically acceptable, free of molding fin, cracks and other exterior blemishes.

Ensure that the material is fabricated from aluminum ingot with minimum requirements as follows:

ALUMINUM ALLOY No.	713
YIELD STRENGTH, ksi (MPa)	25 (172)
TENSILE STRENGTH, ksi (MPa)	35 (240)
BRINELL HARDNESS	75
ELONGATION [% in 2 inches (50 mm)]	3

1. Ensure that the Tri-Stud Span Wire Entrance fitting has a mounting support at the top of the wire entrance 0.69 inches (17 mm) thick [+/- 0.07 inches (1.5 mm)].
2. Ensure that the Tri-Stud Span Wire Entrance fitting weight is not less than 1.75 pounds (0.8 kg) with hardware.
3. Ensure that the mounting support has at least six (6) clevis openings for adjustment with suspension bracing between every two (2) openings.
4. Ensure that the Tri-Stud Span Wire Entrance has a minimum of 0.5 inch (13 mm) diameter throughout for wire access and that wire access is free of burrs and casting webs.
5. Ensure that the Wire Entrance opening is recessed and has a neoprene grommet with sealed membrane sections.

6. Ensure that the signal head attachment end is serrated and has a minimum of 3-signal head centering bosses extending 0.19 inches (5 mm) from the serrations.
7. Ensure that the serrations have a 72-tooth design to match the signal head.
8. Ensure that three (3) stainless steel studs are cast into the wire entrance fitting. Ensure that the studs are 0.31 inches (7 mm) and extend 1.5 inches (38 mm) [+/- 0.13 inches (4 mm)] beyond the serrations. Provide each Tri-Stud span wire entrance fitting with a Tri-Stud hardware kit.
9. Ensure that the Tri-Stud Span Wire Entrance Fitting has an alodine conversion coating to provide a proper base for paint adhesion. Ensure that the assembly matches display housing (per plans) and baked in a drying oven after painting.
10. Ensure that the all Hardware is galvanized or stainless steel.

B. Fabrication

General Provisions 101 through 150.

C. Acceptance

General Provisions 101 through 150.

D. Materials Warranty

Refer to Subsection 925.2.01.D for Materials Warranties.

925.2.48 Bull Rings

A. Requirements

Provide bull rings that are galvanized weldless steel 0.63 inch (16 mm) diameter. Submit catalog cuts for approval.

B. Fabrication

General Provisions 101 through 150.

C. Acceptance

General Provisions 101 through 150.

D. Materials Warranty

Refer to Subsection 925.2.01.D for Materials Warranties.

925.2.49 Ramp Meter Enforcement Device

A. Requirements

For each metered lane, provide one ramp meter enforcement device mounted on the back of one signal per lane and wired directly to the red signal display, (Refer to 647.3.05.L). This installation shall include a Red 44 LED Array (allnGaP), Pixel housing, 6061 aluminum powder coated swivel bracket, 2 inch lens, with an aluminum hood. Mounted and adjusted as per the Plans.

B. Fabrication

General Provisions 101 through 150.

C. Acceptance

General Provisions 101 through 150.

D. Materials Warranty

Refer to Subsection 925.2.01.D for Materials Warranties.

925.2.50 Vinyl Electrical Tape

A. Requirements

Ensure electrical tape used is flame retardant, cold and weather resistant. Provide tape that is rated for 600 volts and for use between 0 F (-18 C) and 176 F (80 C).

Ensure tape is 0.0085 inches (0.2 mm) thick and meets the requirements of UL 510 and Mil-I-24391. Provide tape that remains flexible with abrasion resistance.

B. Fabrication

General Provisions 101 through 150.

C. Acceptance

General Provisions 101 through 150.

D. Materials Warranty

Refer to Subsection 925.2.01.D for Materials Warranties.

925.2.51 Rectangular Rapid Flashing Beacon Assembly

A. Requirements

Provide Rectangular Rapid Flashing Beacon Assemblies in the quantities and locations indicated in the Plans. Provide all equipment, materials, and work in accordance with all manufacturers' recommendations, including but not limited to all mounting, wiring and cabling, power supply, surge suppression, and communications equipment and materials.

Ensure all provisions of the MUTCD applicable to Warning Beacons are met except as otherwise provided in this Specification.

RRFB assembly shall consist of the following components: beacons, mounting pole and foundation, wireless subsystem, solar panel subsystem.

1. Rectangular Rapid Flashing Beacon Assembly

   Ensure that the individual components and assemblies of the Rectangular Rapid Flashing Beacon Assembly conform to the requirements specified herein.

   Ensure that all equipment, materials, components and assemblies of the Rectangular Rapid Flashing Beacon Assembly conform to manufacturer's requirements and recommendations.

   Construct the system with all electronic components of solid-state design and modular construction and designed for the environment in which they will be installed.

   Deliver the Rectangular Rapid Flashing Beacon Assembly with connectors, fasteners, etc. preventing reversed assembly or installation or where possible malfunction or personnel hazards might occur.

   Deliver and install the Rectangular Rapid Flashing Beacon Assembly with any other equipment or components needed for safe and reliable operation.

   Ensure the Rectangular Rapid Flashing Beacon Assembly consists of but is not limited to the following components and materials:

   - Rectangular Rapid Flashing Beacon Assembly
   - Solar cell/battery power source
   - Signs
   - Wireless subsystem
   - Push button activation system
   - Mounting Hardware
   - Configuration and data collection software
   - Installation and testing

   Ensure Rectangular Rapid Flashing Beacon Assembly meets the performance requirements listed below:

   a. Beacon Dimensions and Placement in Sign Assembly

      Contains two rectangular-shaped yellow indications, each with an LED-array based light source. Each indication is a minimum of 5 inches wide by 2 inches high. LEDs face oncoming traffic when installed.

The longer dimensions of the Rectangular Rapid Flashing Beacon indications are aligned horizontally.

The minimum space between the two indications is 7 inches measured from inside edge of one indication to inside edge of the other indication.

The outside edges of Rectangular Rapid Flashing Beacon indications, including any housing, do not project beyond the edges of the S1-1 sign.

The Rectangular Rapid Flashing Beacon indications are located between the bottom of the crosswalk warning (S1-1) sign and the top of the supplemental downward diagonal arrow (W16-7p) sign.

b. Beacon Flashing Requirements

The beacon shall follow the following wig-wag and strobe (WW+S) display pattern:

- A flash cycle length of 800 milliseconds, which results in 75 flash cycles per minute. The 800-millisecond flash cycle shall have the following sequence:
  - **The left side beacon is on for 50 milliseconds**
    Both beacons are off for 50 milliseconds
  - **The right side beacon is on for 50 milliseconds**
    Both beacons are off for 50 milliseconds
  - **The left side beacon is on for 50 milliseconds**
    Both beacons are off for 50 milliseconds
  - **The right side beacon is on for 50 milliseconds**
    Both beacons are off for 50 milliseconds
  - **Both beacons are on for 50 milliseconds**
    Both beacons are off for 50 milliseconds
  - **Both beacons are on for 50 milliseconds**
    Both beacons are off for 250 milliseconds

The flash rate of each individual yellow indication, as applied over the full on-off sequence of a flashing period of the indication, is not between 5 and 30 flashes per second, to avoid frequencies that might cause seizures.

The light intensity of the yellow indications meets minimum specifications of Society of Automotive Engineers (SAE) standard J595 Class I (Directional Flashing Optical Warning Devices for Authorized Emergency, Maintenance, and Service Vehicles) dated January 2005.

c. Beacon Operation

The Rectangular Rapid Flashing Beacon stays normally dark and initiates operation only when actuated by a pedestrian.

The Rectangular Rapid Flashing Beacon ceases operation at a predetermined time after pedestrian actuation and by passive detection, after the pedestrian clears the crosswalk.

All Rectangular Rapid Flashing Beacons associated with a given crosswalk (including those with an advance crossing sign, if used) simultaneously commence operation of their alternating rapid flashing indications when activated and cease operation simultaneously.

Uses pedestrian pushbuttons to actuate the Rectangular Rapid Flashing Beacons.

Includes a pedestrian instruction sign with the legend PUSH BUTTON TO TURN ON WARNING LIGHTS mounted adjacent to or integral with each pedestrian pushbutton.

The duration of a predetermined period of operation of the Rectangular Rapid Flashing Beacons following each actuation is based on the MUTCD procedures for timing of pedestrian clearance times for pedestrian signals.

Includes a small light directed at and visible to pedestrians in the crosswalk installed integral to the Rectangular Rapid Flashing Beacon or push button to give confirmation that the Rectangular Rapid Flashing Beacon is in operation.

Powered by solar cells and batteries with automatic battery charging and power control.
Uses wireless communication to avoid trenching.

The Rectangular Rapid Flashing Beacon is visible a minimum distance of 1000 feet during daytime and nighttime.

d. Wireless Subsystem

Frequency in the 900 MHz FHSS or 2.4 GHz range.
Range: minimum 500'.

e. Solar Panel Subsystem and Batteries

Solar Panel Output: min 20 watt panel or as required by the manufacturer.

Batteries: Batteries shall be sealed and maintenance free with a minimum lifespan of 3 years. Battery type shall be Sealed Valve Regulated Lead Acid Batteries or 12V, 20-40AH Sealed Gel or approved equivalent.

Cabinet (if required): Shall be pole mounted NEMA 4 rated fiberglass cabinet with locking clasps or powder coated aluminum with tamper prove hinged door or approved equivalent.

Solar Panel Mount: pole mount with 60° angle bracket or manufacturer recommended specifications.

2. Mounting Pole and Foundation

Provide a breakaway mounting pole and foundation designed to support the Rectangular Rapid Flashing Beacon and the associated solar panel, batteries and all equipment required to supply a complete Rectangular Rapid Flashing Beacon.

Determine pole foundation dimensions based on the local conditions at the locations indicated in the Plans. Ensure the pole foundation provides a safe and secure mounting of the solar powered Rectangular Rapid Flashing Beacon Assembly.

3. Pedestrian Push Button

ADA Pedestrian push buttons are located perpendicular to signal indication and as required by field conditions. ADA Pedestrian push buttons are located 3.5' (1.05m) above sidewalk or ground level.

Provide the Engineer with plans and drawings illustrating the mounting structure and the installed Rectangular Rapid Flashing Beacon.

B. Fabrication

General Provisions 101 through 150

C. Acceptance

General Provisions 101 through 150

D. Materials Warranty

1. Warranty

Provide to the District Engineer or maintaining agency all manufacturers' warranties and guarantees for all Rectangular Rapid Flashing Beacon Assembly equipment and materials.

Ensure that the warranties and guarantees are consistent with those provided as customary trade practices, or as otherwise specified in the Plan, Standards Specifications, Supplemental Specifications or Special Provisions.

Ensure, and state, that the manufacturer's and supplier's warranties and guarantees are transferrable to the agency or user that is responsible for traffic signal maintenance. And said warranties and guarantees are continuous throughout their duration.

Ensure equipment provided under this specification shall be warranted by the manufacturer to be free from defects in materials and workmanship for a minimum of two years from date of receipt or one year form date of acceptance of installation. The exception is the other materials stated in this specification which have longer warranty durations.

Ensure that the manufacturer with repair any faulty equipment during this period at no charge to the Department for parts, labor or shipping to and from factory.

2. Support

Provide phone consultations as needed during the warranty period at no cost for any operating and maintenance questions or problems.

E. Measurement

1. Equipment

- Rectangular Rapid Flashing Beacon Assembly

Rectangular Rapid Flashing Beacon Assemblies are measured per each Rectangular Rapid Flashing Beacon Assembly completed and accepted.

2. Payment

- Rectangular Rapid Flashing Beacon Assembly

Rectangular Rapid Flashing Beacon Assemblies are paid for at the Contract Unit Price per each. Payment is full compensation for furnishing and installing the Rectangular Rapid Flashing Beacon Assembly.

Payment for Rectangular Rapid Flashing Beacon Assembly is made under:

Item No. 925	Rectangular Rapid Flashing Beacon Assembly	Per Each

925.2.52 Uninterruptible Power System

A. Requirements

This specification establishes minimum requirements for an Uninterruptable Power System/Power Conditioner for use with traffic control equipment. The UPS shall include, but not be limited to the following: Electronics module, Integrated Power Interface Module and Battery System.

1. UPS assemblies shall be designed for installation in a roadside enclosure to provide battery backup functionality for traffic control systems, including traffic signal and intelligent transportation system (ITS) devices.
2. The UPS shall include batteries provided by the UPS manufacturer or in accordance with the manufacturer's requirements and GDOT QPL.
3. Loss of utility power, transfer from utility power, and transfer back to utility power must not interfere with normal operation of connected equipment.
4. UPS assemblies used to provide backup power in an ITS cabinet must provide a minimum of 350 watts (at 120VAC) of continuous backup power for a minimum of two hours. UPS assemblies used to provide backup power in a traffic signal controller cabinet must provide a minimum 400 watts (at 120VAC) of continuous power for a minimum of 6.5 hours.

5. The UPS shall regulate frequency to 60 Hz, plus or minus 0.5 Hz, while the UPS is supplying power.
6. All equipment used to keep the intersection signalized must be backed up and protected by the UPS.
7. Double-conversion UPS must be capable of simultaneously producing fully regenerated and regulated, conditioned, True Sine Wave power and hot standby AC output, and have a minimum operating efficiency of 90%.
8. The UPS shall be designed for outdoor applications in accordance with CALTRANS TEES, UL 1778 and applicable NEMA standards.

The UPS electronics shall consist of:

- Fully software defined, digital signal processor, Power Factor Corrected true online double conversion UPC/UPS (Universal Power Conditioner and Uninterruptable Power Supply)
- 3 stage, temperature compensated battery charger
- Local and remote control of UPS functions
- Local and remote monitoring features

B. Operation

1) The unit shall be capable of on-site programming, monitoring, and operation without the use of an external device. (i.e. – portable PC)
2) The UPC/UPS shall provide continuous, fully conditioned and regulated sinusoidal (AC) power to critical devices in the traffic control cabinet.
3) The UPC/UPS shall provide a minimum of three sets of normally open (NO) and normally closed (NC) single pole, double throw (SPDT) dry relay contact closures, available on a panel mounted terminal block, rated at a minimum 120V/1A, and labeled so as to identify each. Typical configurations are as follows:
   2. Energize on switch to battery power
   3. Energize on low battery life remaining (i.e. 40%)
   4. Run timer (i.e. Contact closure after 2 hours of operation)
4) Contact closures shall be annunciated on the front panel by a visual indication, such as a discreet LED or part of a LCD screen.
5) Operating temperature for the UPC/UPS and the batteries shall be -40°C to +74°C.
6) Upon loss of utility power the UPS shall insert battery power into the system and return to utility power upon restoration of service.
7) In the event of UPS failure or battery depletion, connected equipment must be energized automatically upon restoration of utility power.
8) The battery charging system shall be temperature-compensated and compensate over a range of 2.5 – 4.0 mV/°C per cell. The sensor shall be delivered with 10 feet of wire.
9) Batteries shall not be recharged when the battery temperature exceeds +50°C + -3°C.
10) UPC/UPS system shall be 19" rack mountable and compatible with ITS Model 340 cabinets and companion cabinets mounted adjacent and/or attached to an existing traffic control cabinet. An auxiliary generator plug assembly shall be accessible on the exterior of the cabinet. (Battery cabinet spec provided as a special provision)
11) UPS shall be equipped to prevent malfunction feedback to the cabinet or utility service.
12) Recharge time for the battery, from protective low cut-off to 80% or more of full capacity shall not exceed twenty (20) hours.
13) The Bypass switch shall enable removal and replacement of the UPC/UPS without shutting down the traffic control system. The UPC/UPS shall be capable of starting when no utility line service (AC) is available.
14) The UPC/UPS shall not interfere with the existing traffic control components.
15) The UPC/UPS shall deliver 120 VAC output, + or – 3% with an AC input between 75 and 155 VAC without discharging the batteries.
16) The UPC/UPS shall support a generator input without using the batteries.
17) The unit shall have maximum dimensions of 19 inches in width, 13 inches in depth and 6 inches in height. The unit shall have a maximum weight of 35 pounds.
18) The unit shall provide the following electrical characteristics:
   1. Input
      - Nominal voltage, 120 VAC, single phase
      - Frequency, 45 to 65 Hz
      - Maximum current draw, 17 amps
      - Protection breaker, 20 Amps
   2. Output

- Nominal voltage, 120 VAC, single phase
- Power rating: minimum – 1250 VA, 875 Watts
- Voltage regulation + or – 2% for 100% step load change and from high battery to low battery condition
- Frequency 50 or 60 Hz (+ or – .25, software selectable)
- Configuration keyed connectors and duplex receptacle
- Overload capability 110% for 10 seconds, 200% for 50 milliseconds

C. Displays, Controls and Diagnostics

1. The UPC/UPS shall include a display and/or meter to indicate current battery charge status and conditions.
2. Voltmeter standard "banana jacks" (+) and (-) mounted on the front panel to read the exact battery voltage drop at the inverter input.
3. Front panel indicated 0 to 100% battery capacity.
4. Built in TVSS (surge suppression) compliant with IEEE/ANSI C.62.4.
5. Integral system to prevent destructive battery discharge and overcharge.
6. Batteries shall be serviceable from the cabinet and shelf system without the need for specialized tools and/or compartment disassembly.
7. An event counter and total hours run time accessible from the front panel display, resettable by front panel command entry.
8. Manufacturer shall include a set of equipment lists, operation and maintenance manuals, battery data sheets, board level schematic and wiring diagrams of the system.
9. The UPC/UPS system shall provide front panel controls for: Power ON, Cold Start, Alarm Silence, Battery Test, Bypass Breaker, DC/Battery Breaker, Battery Test Points, Auxiliary Temperature Connector and Programming Keypad.The UPC/UPS system shall provide a standard EIA 232 interface using a DB 9 connector for remote monitoring and control of system functions. Remote 75 and 155 VAC without discharging the batteries.
10. The UPC/UPS system shall provide a standard EIA 232 interface using a DB 9 connector for remote monitoring and control of system functions. Remote monitoring and full command and control software and a serial connecting cable shall be provided.
11. A NIC (Network Interface Card) shall be provided and the UPC/UPS firmware shall support SNMP protocol and have standard UPS MIBs onboard. The system shall be capable sending SNMP messages that can be trapped with network monitoring tools such as Orion Network Performance Monitor. Remote monitoring and control shall be accessible via a WEB browser interface.

D. Battery System

1. Individual batteries shall be:
   a. 12 volt rating.
   b. Group 24 maximum case size.
2. Battery string shall consist of a minimum of 6 batteries with a cumulative minimum rated capacity of 240 amp-hours.
3. Batteries shall be deep cycle, sealed prismatic lead-calcium based.
4. AGM/SVRLA (Absorbed Glass Mat/Valve Regulated Lead Acid)
5. Batteries shall provide a connection system that shields the terminal from exposure and accidental shorting.
6. Batteries shall be certified to operate over a temperature range of -40°C to +74°C.
7. Batteries shall be provided with appropriate interconnect wiring and corrosion resistant mounting trays and/or brackets appropriate for the cabinet into which they will be installed.
8. Batteries shall indicate maximum recharge data and recharge cycles.
9. Labels shall be included identifying the date of manufacture. Batteries delivered with a manufacture date older than 6 months will be rejected.
10. Battery Harness
    a. Battery interconnect wiring shall be via two-part modular harness. The cables shall be protected with abrasion resistant nylon sheathing. The interconnect cables shall connect to the base module via a quick release connector. The connector shall have interlocking pins to prevent battery operation if the batteries are not connected. Battery interconnect harness wiring shall be UL style 1015 CSA TEW or Welded Style Cable or equivalent, or proper wire gauge with respect to design current and sufficient strand count for flexibility.
    b. Battery construction shall include heavy duty, inter-cell connection for low impedance between cells.

E. Acceptance

Each UPC/UPS shall be manufactured in accordance with a manufacturer Quality Assurance program (QA). The QA program shall include Production QA that include statistically controlled routine tests to ensure minimum performance levels of UPC/UPS units built to meet this specification and a documented process of how problems are to be resolved. The manufacturer, or an independent testing lab hired by the manufacturer, shall perform Design Quality Testing when any design change results in any alteration to the circuit configuration or performance characteristics.

F. Materials Warranty

Manufacturers shall provide a two (2) year factory repair warranty for parts and labor on the UPC/UPS from date of acceptance by the Department. Batteries shall be warranted for full replacement for the first year and 50% discount off the original purchase price for the second year from date of purchase.

EXHIBIT L

GDOT STANDARD SPECIFICATIONS

Please click on the link below for GDOT'S Standard Specifications Construction of Transportation Systems

http:www.dot.ga.gov/PartnerSmart/Business/Source/specs/DOT2013.pdf